X65x Series

Machine Type 7462-xxxx

Service Manual

June 28, 2016

www.lexmark.com

P/N 12G9823

Product information

Product name:
Lexmark X65x Series

Machine type:
7462

Model(s):
03x, 0A5, 0A1, 23x,2Ax, 43x, 4Ax

Edition notice

June 28, 2016

The following paragraph does not apply to any country where such provisions are inconsistent with local law: LEXMARK INTERNATIONAL, INC., PROVIDES THIS PUBLICATION "AS IS" WITHOUT WARRANTY OF ANY KIND, EITHER EXPRESS OR IMPLIED, INCLUDING, BUT NOT LIMITED TO, THE IMPLIED WARRANTIES OF MERCHANTABILITY OR FITNESS FOR A PARTICULAR PURPOSE. Some states do not allow disclaimer of express or implied warranties in certain transactions; therefore, this statement may not apply to you.

This publication could include technical inaccuracies or typographical errors. Changes are periodically made to the information herein; these changes will be incorporated in later editions. Improvements or changes in the products or the programs described may be made at any time.

References in this publication to products, programs, or services do not imply that the manufacturer intends to make these available in all countries in which it operates. Any reference to a product, program, or service is not intended to state or imply that only that product, program, or service may be used. Any functionally equivalent product, program, or service that does not infringe any existing intellectual property right may be used instead. Evaluation and verification of operation in conjunction with other products, programs, or services, except those expressly designated by the manufacturer, are the user's responsibility.

Trademarks

Lexmark and the Lexmark logo are trademarks of Lexmark International, Inc., registered in the United States and/or other countries.

PCL® is a registered trademark of the Hewlett-Packard Company. PCL is Hewlett-Packard Company's designation of a set of printer commands (language) and functions included in its printer products. This printer is intended to be compatible with the PCL language. This means the printer recognizes PCL commands used in various application programs, and that the printer emulates the functions corresponding to the commands.

PostScript is a registered trademark of Adobe Systems Incorporated in the United States and/or other countries.

All other trademarks are the property of their respective owners.

P/N 12G9823

Table of contents

Notices and safety information

Laser notices

Laser notice

The printer is certified in the U.S. to conform to the requirements of DHHS 21 CFR, Chapter I, Subchapter J for Class I (1) laser products, and elsewhere is certified as a Class I laser product conforming to the requirements of IEC 60825-1.

Class I laser products are not considered to be hazardous. The printer contains internally a Class IIIb (3b) laser that is nominally a 5 milliwatt gallium arsenide laser operating in the wavelength of 770-795 nanometers. The laser system and printer are designed so there is never any human access to laser radiation above a Class I level during normal operation, user maintenance, or prescribed service condition.

Laser-Hinweis

Der Drucker wurde in den USA zertifiziert und entspricht den DHHS-Vorschriften 21 CFR, Kapitel I, Unterkapitel J für Laserprodukte der Klasse I (1); andernorts ist er als Laserprodukt der Klasse I zertifiziert, das den IEC 60825-1-Anforderungen entspricht.

Laserprodukte der Klasse I werden nicht als gefährlich eingestuft. Der Drucker enthält im Inneren einen Laser der Klasse IIIb (3b), und zwar einen 5-Milliwatt-Gallium-Arsenid-Laser, der im Wellenlängenbereich von 770 bis 795 Nanometern arbeitet. Das Lasersystem und der Drucker sind so konstruiert, dass unter normalen Betriebsbedingungen, bei der Wartung durch den Benutzer oder bei den vorgeschriebenen Wartungsbedingungen Menschen keiner Laserstrahlung ausgesetzt sind, die die Werte für Klasse I überschreitet.

Avis relatif à l'utilisation du laser

L'imprimante est certifiée conforme aux exigences de la réglementation des Etats-Unis relative aux produits laser (DHHS 21 CFR, Chapter I, Subchapter J for Class I (1)). Pour les autres pays, elle est certifiée conforme aux exigences des normes IEC 60825-1 relatives aux produits laser de classe I.

Les produits laser de Classe I ne sont pas considérés comme dangereux. L'imprimante contient un laser de classe IIIb (3b), laser arséniure de gallium 7 milliwatts opérant sur une longueur d'onde de l'ordre de 770 à 795 nanomètres. Le système laser ainsi que l'imprimante ont été conçus de manière à ce que personne ne soit exposé à des rayonnements laser dépassant le niveau de classe I dans le cadre d'un fonctionnement normal, de l'entretien par l'utilisateur ou de la maintenance.

Avvertenze sui prodotti laser

La stampante è certificata negli Stati Uniti come stampante conforme ai requisiti DHHS 21 CFR, Capitolo I, Sottocapitolo J per i prodotti laser di Classe I (1), mentre in altri paesi è certificata come prodotto laser di Classe I conforme ai requisiti IEC 60825-1.

I prodotti laser di Classe I non sono considerati pericolosi. La stampante contiene un laser di Classe IIIb (3b), che è nominalmente un laser ad arseniuro di gallio a 5 milliwatt funzionante a una lunghezza d'onda di 770-795 nanometri. Il sistema laser e la stampante sono stati progettati in modo da impedire l'esposizione a radiazioni laser superiori al livello previsto dalla Classe I durante le normali operazioni di stampa, manutenzione o assistenza.

Aviso de láser

Esta impresora se ha certificado en EE. UU. de conformidad con los requisitos de DHHS 21 CFR, capítulo I, subcapítulo J, para los productos láser de Clase I (1), y en otros países está certificada como un producto láser de Clase I de acuerdo con los requisitos de IEC 60825-1.

Los productos láser de Clase I no se consideran peligrosos. La impresora contiene un láser interno de Clase IIIb (3b) que nominalmente es un láser de arseniuro de galio de 5 milivatios que funciona en una longitud de onda de 770-795 nanómetros. El sistema láser y la impresora se han diseñado para que ningún individuo acceda nunca a las radiaciones láser por encima del nivel de Clase I durante su uso normal, ni en tareas de mantenimiento o intervenciones de servicio técnico prescritas.

Aviso sobre laser

A impressora foi certificada nos EUA por estar em conformidade com os requisitos do DHHS 21 CFR, capítulo I, subcapítulo J, para produtos a laser de Classe I (1) e, nos demais países, foi certificada como produto a laser de Classe I em conformidade com os requisitos da IEC 60825-1.

Os produtos a laser de Classe I não são considerados perigosos. A impressora contém, internamente, um laser de Classe IIIb (3b) que é um laser de arsenieto de gálio de 5 miliwatts operando no comprimento de onda de 770-795 nanômetros. O sistema do laser e a impressora foram projetados para que jamais haja acesso humano à radiação do laser acima do nível da Classe I durante a operação normal ou a manutenção pelo usuário ou sob as condições de manutenção prescritas.

Laserinformatie

Deze printer is in de Verenigde Staten gecertificeerd als een product dat voldoet aan de vereisten van DHHS 21 CFR, hoofdstuk 1, paragraaf J voor laserproducten van klasse I (1). Elders is de printer gecertificeerd als een laserproduct van klasse I dat voldoet aan de vereisten van IEC 60825-1.

Laserproducten van klasse I worden geacht geen gevaar op te leveren. De printer bevat intern een laser van klasse IIIb (3b), een galliumarsenide laser met een nominaal vermogen van 5 milliwatt en een golflengtebereik van 770-795 nanometer. Het lasersysteem en de printer zijn zodanig ontworpen dat gebruikers nooit blootstaan aan laserstraling die hoger is dan het toegestane niveau voor klasse I-apparaten, tijdens normaal gebruik, onderhoudswerkzaamheden door de gebruiker of voorgeschreven servicewerkzaamheden.

Lasererklæring

Denne printer er certificeret i USA i henhold til kravene i DHHS 21 CFR, afsnit I, underafsnit J, for Klasse I-laserprodukter (1) og certificeret andetsteds som et Klasse I-laserprodukt i henhold til kravene i IEC 60825-1.

Klasse I-laserprodukter anses ikke for at være farlige. Printeren indeholder internt en klasse IIIb (3b)-laser, der nominelt er en 5 milliwatt galliumarsenid-laser, som fungerer i bølgelængdeområdet 770-795 nanometer. Lasersystemet og printeren er udviklet på en sådan måde, at der ikke er en direkte laserstråling, der overskrider Klasse I-niveauet under normal brug, brugers vedligeholdelse eller de foreskrevne servicebetingelser.

Laserilmoitus

Tämä tulostin on sertifioitu Yhdysvalloissa DHHS 21 CFR, Chapter I, Subchapter J -standardin mukaiseksi luokan I (1) -lasertuotteeksi ja muualla IEC 60825-1 -standardin mukaiseksi luokan I lasertuotteeksi.

Luokan I lasertuotteita ei pidetä haitallisina. Tulostimen sisällä on luokan IIIb (3b) laser, joka on nimellisteholtaan 5 mW:n galliumarsenidilaser ja toimii 770–795 nanometrin aallonpituuksilla. Laserjärjestelmä ja tulostin ovat rakenteeltaan sellaisia, että käyttäjä ei joudu alttiiksi luokkaa 1 suuremmalle säteilylle normaalin käytön, ylläpidon tai huollon aikana.

Lasermeddelande

Skrivaren är certifierad i USA enligt kraven i DHHS 21 CFR, avsnitt I, underavsnitt J för laserprodukter av klass I (1) och i andra länder är den certifierad som en laserprodukt av klass I som uppfyller kraven i IEC 60825-1.

Laserprodukter av klass I anses inte vara skadliga. Skrivaren innehåller en klass IIIb (3b)-laser, vilket är en 5 mW galliumarseniklaser som arbetar inom en våglängd på 770–795 nm. Lasersystemet och skrivaren är utformade så att människor aldrig utsätts för laserstrålning över klass I-nivå under normala förhållanden vid användning, underhåll eller service.

Lasermerknad

Skriveren er sertifisert i USA for samsvar med kravene i DHHS 21 CFR, kapittel I, underkapittel J for laserprodukter av klasse I (1), og er andre steder sertifisert som et laserprodukt av klasse I som samsvarer med kravene i IEC 60825-1.

Laserprodukter av klasse I anses ikke som helseskadelige. Skriveren inneholder en intern laser av klasse IIIb (3b) som nominelt er en 5 milliwatt galliumarsenid-laser, og som opererer i bølgelengder på 770-795 nanometer. Lasersystemet og skriveren er utformet slik at mennesker ikke utsettes for laserstråling utover nivået i klasse I under normal drift, vedlikehold eller foreskrevet service.

Avís sobre el làser

Als EUA, la impressora està certificada de conformitat amb els requisits del capítol I, apartat J del CFR 21 del Departament de Salut i Serveis Humans per a productes làser de classe I (1) i a la resta de països està certificada com a producte làser de classe I d'acord amb els requisits de la norma IEC 60825-1.

Els productes làser de classe I no es consideren perillosos. A l'interior de la impressora hi ha un làser de classe IIIb (3b) que nominalment es un arsenur de galió de 5 mil·liwatts que funciona a una longitud d'ona de 770-795 nanòmetres. El sistema làser y la impressora s'han dissenyat amb l'objectiu d'impedir l'accés humà de la radiació làser superior al nivell de classe I durant un funcionament normal, el manteniment per part de l'usuari o les condicions de servei prescrites.

レーザーに関する通知

本機は、米国においてクラス I（1）レーザー製品に対する DHHS 21 CFR、Chapter I、Subchapter J の要件に準拠し、その他の国では IEC 60825-1 の要件に準拠するクラス I レーザー製品として認可されています。

クラス I レーザー製品は、危険性がないとみなされています。 本機には、クラス IIIb（3b）レーザーが内蔵されています。これは、770 ～ 775 ナノメートルの波長で動作する定格 5 ミリワットのガリウムヒ素レーザーです。 レーザーシステムとプリンタは、通常の操作、ユーザーによるメンテナンス、または所定のサービス条件の下で、ユーザーがクラス I レベルを超えるレーザー放射に絶対にさらされないように設計されています。

레이저 관련 공지

이 프린터는 미국에서 DHHS 21 CFR, Chapter I, Subchapter J의 요구 사항을 준수하는 클래스 I(1) 레이저 제품으로 승인되었으며 이외 지역에서 IEC 60825-1의 요구 사항을 준수하는 클래스 I 레이저 제품으로 승인되었습니다.

Class I 레이저 제품은 위험한 제품으로 간주되지 않습니다. 프린터에는 770-795 나노미터의 파장 영역에서 작동하는 공칭 5밀리와트 갈륨 비소 레이저인 클래스 IIIb(3b) 레이저가 내부에 포함되어 있습니다. 레이저 시스템과 프린터는 정상적인 작동, 사용자 유지 관리 또는 사전 설명된 서비스 조건에는 사람에게 클래스 I 수준 이상의 레이저 방사가 노출되지 않도록 설계되었습니다.

激光注意事项

本打印机在美国认证合乎 DHHS 21 CFR Chapter I，Subchapter J 对分类 I（1）激光产品的标准，而在其他地区则被认证是合乎 IEC 60825-1 的分类 I 激光产品。

一般认为分类 I 激光产品不具有危险性。本打印机内部含有分类 IIIb（3b）的激光，在操作过程中会产生额定 5 毫瓦的砷化镓激光，其波长范围在 770-795nm 之间。本激光系统及打印机的设计，在一般操作、使用者维护或规定内的维修情况下，不会使人体接触分类 I 以上等级的辐射。

雷射聲明

本印表機係經過美國核可，符合 DHHS 21 CFR，Chapter I，Subchapter J 規定的 I (1) 級雷射產品激光注意事項；在美國以外的地區，為符合 IEC 60825-1 規定的 I 級雷射產品。

根據 I 級雷射產品的規定，這類產品不會對人體造成傷害。本機所採用之 IIIb (3b) 級雷射只會產生 5 百萬分之一瓦特 (milliwatt)、波長 770 至 795 億分之一米 (nanometer) 的鎵砷放射線 (gallium arsenide laser)。使用者只要以正確的方法操作及維護保養，並依照先前所述之維修方式進行修護，此印表機與其雷射系統絕不會產生 I 級以上的放射線，而對人體造成傷害。

Safety information

Safety information

- The safety of this product is based on testing and approvals of the original design and specific components. The manufacturer is not responsible for safety in the event of use of unauthorized replacement parts.
- The maintenance information for this product has been prepared for use by a professional service person and is not intended to be used by others.
- There may be an increased risk of electric shock and personal injury during disassembly and servicing of this product. Professional service personnel should understand this and take necessary precautions.

CAUTION—POTENTIAL INJURY

The lithium battery in this product is not intended to be replaced. There is a danger of explosion if a lithium battery is incorrectly replaced. Do not recharge, disassemble, or incinerate a lithium battery. Discard used lithium batteries according to the manufacturer's instructions and local regulations.

Consignes de sécurité

- La sécurité de ce produit repose sur des tests et des agréations portant sur sa conception d'origine et sur des composants particuliers. Le fabricant n'assume aucune responsabilité concernant la sécurité en cas d'utilisation de pièces de rechange non agréées.
- Les consignes d'entretien et de réparation de ce produit s'adressent uniquement à un personnel de maintenance qualifié.
- Le démontage et l'entretien de ce produit pouvant présenter certains risques électriques, le personnel d'entretien qualifié devra prendre toutes les précautions nécessaires.

AVERTISSEMENT—RISQUE DE BLESSURE

La batterie lithium de ce produit n'est pas destinée à être remplacée. Il existe un risque d'explosion si une batterie lithium est placée de façon incorrecte. Ne rechargez pas, ne démontez pas et n'incinérez pas une batterie lithium. Mettez les batteries lithium usagées au rebut selon les instructions du fabricant et les réglementations locales.

Norme di sicurezza

- La sicurezza del prodotto si basa sui test e sull'approvazione del progetto originale e dei componenti specifici. Il produttore non è responsabile per la sicurezza in caso di sostituzione non autorizzata delle parti.
- Le informazioni riguardanti la manutenzione di questo prodotto sono indirizzate soltanto al personale di assistenza autorizzato.
- Durante lo smontaggio e la manutenzione di questo prodotto, il rischio di subire scosse elettriche e danni alla persona è più elevato. Il personale di assistenza autorizzato deve, quindi, adottare le precauzioni necessarie.

ATTENZIONE — PERICOLO DI LESIONI

La batteria al litio presente del prodotto non deve essere sostituita. In caso di sostituzione errata della batteria al litio, potrebbe verificarsi un'esplosione. Non ricaricare, smontare o bruciare batterie al litio. Smaltire le batterie al litio usate seguendo le istruzioni del produttore e le norme locali.

Sicherheitshinweise

- Die Sicherheit dieses Produkts basiert auf Tests und Zulassungen des ursprünglichen Modells und bestimmter Bauteile. Bei Verwendung nicht genehmigter Ersatzteile wird vom Hersteller keine Verantwortung oder Haftung für die Sicherheit übernommen.
- Die Wartungsinformationen für dieses Produkt sind ausschließlich für die Verwendung durch einen Wartungsfachmann bestimmt.
- Während des Auseinandernehmens und der Wartung des Geräts besteht ein zusätzliches Risiko eines elektrischen Schlags und körperlicher Verletzung. Das zuständige Fachpersonal sollte entsprechende Vorsichtsmaßnahmen treffen.

VORSICHT - VERLETZUNGSGEFAHR

Die Lithiumbatterie in diesem Produkt darf nicht ausgetauscht werden. Wird eine Lithiumbatterie nicht ordnungsgemäß ausgetauscht, besteht Explosionsgefahr. Lithiumbatterien dürfen auf keinen Fall wieder aufgeladen, auseinander genommen oder verbrannt werden. Befolgen Sie zum Entsorgen verbrauchter Lithiumbatterien die Anweisungen des Herstellers und die örtlichen Bestimmungen.

Pautas de Seguridad

- La seguridad de este producto se basa en pruebas y aprobaciones del diseño original y componentes específicos. El fabricante no es responsable de la seguridad en caso de uso de piezas de repuesto no autorizadas.
- La información sobre el mantenimiento de este producto está dirigida exclusivamente al personal cualificado de mantenimiento.
- Existe mayor riesgo de descarga eléctrica y de daños personales durante el desmontaje y la reparación de la máquina. El personal cualificado debe ser consciente de este peligro y tomar las precauciones necesarias.

PRECAUCIÓN: POSIBLES DAÑOS PERSONALES

La batería de litio de este producto no debe reemplazarse. Existe riesgo de explosión si se sustituye incorrectamente una batería de litio. No recargue, desmonte ni incinere una batería de litio. Deseche las baterías de litio según las instrucciones del fabricante y las normativas locales.

Informações de Segurança

- A segurança deste produto baseia-se em testes e aprovações do modelo original e de componentes específicos. O fabricante não é responsável pela segunrança, no caso de uso de peças de substituição não autorizadas.
- As informações de segurança relativas a este produto destinam-se a profissionais destes serviços e não devem ser utilizadas por outras pessoas.
- Risco de choques eléctricos e ferimentos graves durante a desmontagem e manutenção deste produto. Os profissionais destes serviços devem estar avisados deste facto e tomar os cuidados necessários.

ATENÇÃO — RISCO DE FERIMENTO

A bateria de lítio neste produto não deve ser substituída. Existe o risco de explosão se uma bateria de lítio for substituída incorretamente. Não recarregue, desmonte ou incinere uma bateria de lítio. Descarte as baterias de lítio usadas de acordo com as instruções do fabricante e regulamentos locais.

Informació de Seguretat

- La seguretat d'aquest producte es basa en l'avaluació i aprovació del disseny original i els components específics. El fabricant no es fa responsable de les qüestions de seguretat si s'utilitzen peces de recanvi no autoritzades.
- La informació pel manteniment d'aquest producte està orientada exclusivament a professionals i no està destinada a ningú que no ho sigui.
- El risc de xoc elèctric i de danys personals pot augmentar durant el procés de desmuntatge i de servei d'aquest producte. El personal professional ha d'estar-ne assabentat i prendre les mesures convenients.

ATENCIÓ

La bateria de liti d'aquest producte no ha estat dissenyada perquè es substitueixi. Hi ha perill d'explosió si no es substitueix correctament la bateria de liti. No recarregueu, desmunteu o incinereu una bateria de liti. Desfeu-vos de les bateries de liti usades d'acord amb les instruccions del fabricant i les regulacions locals.

안전 사항

- 본 제품은 원래 설계및특정 구성에 대한 테스트 결과로 안정 성이 입증된 것입니다. 따라서 무허가 교체부품을 사용하는 경 우 에는 제조업체에서 안전에 대한 책임을 지지 않습니다.
- 본 제품에 관한 유지 보수 설명 서는 전문 서비스 기술자 용으로 작성된 것이므로, 비 전문가는 사용할 수 없습니다.
- 본 제품을 해체하거나 정비할 경우, 전 기전 인 충 경 을 받거나 상 처를 입을 위험이 커집니다. 전문 서비스 기술자는 이 사실을 숙지하고, 필요한 예방조치를 취하도록 하십시오.

주의—부상 위험

이 제품에 들어 있는 리튬 배터리는 교체할 수 없습니다. 리튬 배터리를 잘못 교체하면 폭발할 위험이 있습니다. 리튬 배터리를 재충전하거나, 분해하거나, 태우지 마십시오. 제조업체의 지침과 지역 규정에 따라 다 쓴 리튬 배터리를 폐기하십시오.

安全信息

- 本产品的安全性以原来设计和特定产品的测试结果和认证为基础。万一使用来经许可的替换部件，制造商不对安全性负责。
- 本产品的维护信息仅供专业服务人员使用，并不打算证其他人使用。
- 本产品在拆卸、维修时，遭受电击或人员受伤的危险性会增高，专业服务人员对这点必须有所了触，并采取必要的预防措施。

当心—可能的伤害：

本产品中的锂电池不可更换。如果不正确更换锂电池，可能会有爆炸危险。不要再 充电、拆解或焚烧锂电池。丢弃旧的锂电池时应按照制造商的指导及当地法规进行处理。

Preface

This manual contains maintenance procedures for service personnel.

It is divided into the following chapters:

- **General information** contains a general description of the printer. Special tools and test equipment are discussed.
- **Diagnostic information** contains diagnostic aids you can use to isolate failing FRUs. These diagnostic aids include error code tables, symptom tables, and service checks.
- **Service menus** contains descriptions of the printer interface, the user and service menus.
- **Repair information** provides instructions for making printer adjustments and removing and installing FRUs.
- **Component locations** uses illustrations to identify the basic printer parts.
- **Maintenance** contains the lubrication specifications and recommendations to prevent problems.
- **Parts catalog** contains illustrations and part numbers for individual FRUs.
- **Appendix A: Printer specifications** contains detailed specifications about the product.
- **Appendix B: Options and features** contains the available options and other features of the product.
- **Appendix C: Theory of operation** contains the theory of operation.
- **Appendix D: Acronyms** contains the list of acronyms in the manual and their meanings.

Service manual conventions

Note: A *note* provides additional information.

Warning—Potential Damage: A *warning* identifies something that may damage the product hardware or software.

This service manual uses several different types of caution statements:

CAUTION—POTENTIAL INJURY: A *caution* identifies something that may cause harm to the service technician.

CAUTION—SHOCK HAZARD: This type of caution indicates a danger from hazardous voltage in the area of the product where you are working. Unplug the product before you start working, or use caution if the product must receive power to perform the task.

CAUTION—HOT SURFACE: This type of caution indicates a hot surface.

CAUTION—TIPPING HAZARD: This type of caution indicates a tipping hazard.

Change history

June 28, 2016

- Updated the ”LES Applications” topic in the “Service menus” chapter.

June 20, 2016

- Removed 40X7003 in the “Universal trays and accessories” topic in the “Parts catalog” chapter.

May 19, 2016

- Updated the 250- and 550-sheet tray assemblies (Assemblies 15 and 17) to remove the following parts that are not anymore FRUs:
  - Tray front cover
  - Tray right cover
  - Tray left cover

January 8, 2016

- Changed the part number of the input sensor from 40X4368 to 40X8673.

October 20, 2015

- Created this new intervention-required message, **"81 Routine Maintenance" on page 200**.
- Updated **"User attendance messages (0-99)" on page 202** to include an entry for **`81 Routine Maintenance`**.
- Created **"Replace fuser service check" on page 214**.
- Updated **"Individual maintenance part expected life" on page 567** to change the part number for the charge roll assembly with tool from 40X5852 to 40X0127.

August 21, 2015

- Updated all fuser-related service check topics for 201 and 202 error messages in the Diagnostic information chapter.

January 27, 2015

- Updated the Solid black service check in the Diagnostic information chapter.

January 9, 2015

- Remove the 202.30 error code entry from the Error code table in the Diagnostic information chapter.

December 5, 2014

- Parts catalog Assembly 17—Replaced part number 40X4469 with 40X5786.

October 30, 2014

- Updated the graphic in the Assembly 5 parts catalog in the Pars catalog chapter.
- Replaced part number 40X4417 with 41X4417 in the Assembly 1 parts catalog in the Parts catalog chapter.

September 29, 2014

- Updated Assembly 5 parts catalog art in the Parts catalog chapter.

June 2, 2014

- Added staple cartridge holder (40X7466) to parts catalog Assembly 20.

May 2, 2014

- Changed all references to J15-3 to J20-4 in the possible repair action for "917.00" error code in the 9yy error code table.

April 30, 2013

- Added ADF paper feed service check and ADF maintenance kit.
- Updated the warning statement in the System card assembly removal topic. Added the same warning to the Operator panel assembly removal and the Operator panel door assembly removal.

February 28, 2012

- Added error code “907.00” in the 9yy error code table.

February 2, 2012

- Added PN 40X6932 for the tray size sensing actuators.
- Added United Kingdom in the description for PN 40X0271.

November 22, 2011

- Updated the possible repair action for the following error codes:
  - 200.34
  - 929.01
  - 929.02
  - 929.03

October 25, 2011

- Replaced PN 40X4310 with PN 40X8310 for the HCIT media out actuator.

September 1, 2011

- Replaced PN 40X4365 with PN 40X6994 for the MPF pick solenoid assembly.

July 14, 2011

- Replaced PN 40X4473 with PN 99A0447 for the 550 option draft shaft.
- Added PN 99A0275 for the spring.
- Updated the art for Assembly 15 in the Parts catalog chapter.
- Replaced PN 40X4473 with PN 99A0447 for the 550 option draft shaft in Assembly 17 table in the Parts catalog chapter.
- Added PN 99A0275 for the spring in the Assembly 17 table in the Parts catalog chapter.
- Updated the art for Assembly 17 in the Parts catalog chapter.

July 8, 2011

- Replaced PN 40X4309 with PN 40X5840 in Assembly 16 table in the Parts catalog chapter.
- Changed the model for the 7462-0A5 machine type to X652de from X652dte under General Information and parts catalog chapters.

General information

The Lexmark™ laser printers are letter-quality page printers designed to attach to personal computers and to most computer networks..

The printers are available in the following models:

Machine type / model number	Model name	Description					
		AIO	Simplex ADF	Duplex ADF	Duplex printer	Modem	Hard drive
7462-031	X651de	Yes	Yes	N/A	Yes	N/A	N/A
7462-035	X652de	Yes	Yes	N/A	Yes	Yes	N/A
7462-0A5	X652de	Yes	Yes	N/A	Yes	Yes	N/A
7462-0A1	X654de	Yes	N/A	Yes	Yes	N/A	N/A
7462-231	X654de	Yes	N/A	Yes	Yes	N/A	N/A
7462-232	X654de	Yes	N/A	Yes	Yes	Yes	N/A
7462-235	X656dte	Yes	N/A	Yes	Yes	N/A	Yes
7462-236	X656dte	Yes	N/A	Yes	Yes	Yes	Yes
7462-2A1	X654de	Yes	N/A	Yes	Yes	N/A	N/A
7462-2A2	X654de	Yes	N/A	Yes	Yes	Yes	N/A
7462-2A5	X656dte	Yes	N/A	Yes	Yes	N/A	Yes
7462-2A6	X656dte	Yes	N/A	Yes	Yes	Yes	Yes
7462-432	X658de	Yes	N/A	Yes	Yes	N/A	Yes
7462-436	X658de	Yes	N/A	Yes	Yes	Yes	Yes
7462-4A2	X658de	Yes	N/A	Yes	Yes	N/A	Yes
7462-4A6	X658de	Yes	N/A	Yes	Yes	Yes	Yes

Media guidelines

Additional information for printing on specialty media may be found in the *Cardstock and Label Guide* available at **http://support.lexmark.com**.

Paper Guidelines

Selecting the correct paper or specialty media reduces printing problems. For the best print quality, try a sample of the paper or specialty media before buying large quantities.

Paper characteristics

The following paper characteristics affect print quality and reliability. Consider these factors when evaluating new paper stock.

Weight

The printer can automatically feed paper weights from 60–176 g/m^2 (16–47 lb bond) grain long. Paper lighter than 60 g/m^2 (16 lb) might not be stiff enough to feed properly, and may cause paper jams. For best performance, use 75 g/m^2 (20 lb bond) grain long paper. For paper smaller than 182 x 257 mm (7.2 x 10.1 inches), we recommend 90 g/m^2 (24 lb) or heavier paper.

Curl

Curl is the tendency for paper to curl at its edges. Excessive curl can cause paper feeding problems. Curl can occur after the paper passes through the printer, where it is exposed to high temperatures. Storing paper unwrapped in hot, humid, cold, or dry conditions, even in the trays, can contribute to paper curling prior to printing and can cause feeding problems.

Smoothness

Paper smoothness directly affects print quality. If paper is too rough, then toner cannot fuse to it properly. If paper is too smooth, then it can cause paper feeding or print quality issues. Always use paper between 100 and 300 Sheffield points; smoothness between 150 and 250 Sheffield points produces the best print quality.

Moisture content

The amount of moisture in paper affects both print quality and the ability of the printer to feed the paper correctly. Leave paper in its original wrapper until it is time to use it. This limits the exposure of paper to moisture changes that can degrade its performance.

Store paper in its original wrapper in the same environment as the printer for 24 to 48 hours before printing. Extend the time several days if the storage or transportation environment is very different from the printer environment. Thick paper may also require a longer conditioning period.

Grain direction

Grain refers to the alignment of the paper fibers in a sheet of paper. Grain is either *grain long*, running the length of the paper, or *grain short*, running the width of the paper.

For 60–176 g/m^2 (16–47 lb bond) paper, grain long paper is recommended. For paper heavier than 176 g/m^2, grain short is recommended.

Fiber content

Most high-quality xerographic paper is made from 100% chemically treated pulped wood. This content provides the paper with a high degree of stability, resulting in fewer paper feeding problems and better print quality. Paper containing fibers such as cotton can negatively affect paper handling.

For detailed information on paper with recycled fiber content, see **“Using recycled paper and other office papers” on page 33**.

Selecting paper

Using appropriate paper prevents jams and helps ensure trouble-free printing.

To help avoid jams and poor print quality:

- *Always* use new, undamaged paper.
- Before loading paper, know the recommended print side of the paper. This information is usually indicated on the paper package.

- *Do not* use paper that has been cut or trimmed by hand.
- *Do not* mix paper sizes, types, or weights in the same source; mixing results in jams.
- *Do not* use coated papers unless they are specifically designed for electrophotographic printing.

Selecting preprinted forms and letterhead

Use these guidelines when selecting preprinted forms and letterhead:

- Use grain long for 60 to 90 g/m^2 weight paper.
- Use only forms and letterhead printed using an offset lithographic or engraved printing process.
- Avoid papers with rough or heavily textured surfaces.

Use papers printed with heat-resistant inks designed for use in xerographic copiers. The ink must be able to withstand temperatures up to 230°C (446°F) without melting or releasing hazardous emissions. Use inks that are not affected by the resin in toner. Inks that are oxidation-set or oil-based generally meet these requirements; latex inks might not. When in doubt, contact the paper supplier.

Preprinted papers such as letterhead must be able to withstand temperatures up to 230°C (446°F) without melting or releasing hazardous emissions.

Storing paper

Use these paper storage guidelines to help avoid jams and uneven print quality:

- For best results, store paper where the temperature is 21°C (70°F) and the relative humidity is 40%. Most label manufacturers recommend printing in a temperature range of 18 to 24°C (65 to 75°F) with relative humidity between 40 and 60%.
- Store paper in cartons when possible, on a pallet or shelf, rather than on the floor.
- Store individual packages on a flat surface.
- Do not store anything on top of individual paper packages.

Using recycled paper and other office papers

As an environmentally conscious company, Lexmark supports the use of recycled office paper produced specifically for use in laser (electrophotographic) printers. In 1998, Lexmark presented to the US government a study demonstrating that recycled paper produced by major mills in the US fed as well as non-recycled paper. However, no blanket statement can be made that *all* recycled paper will feed well.

Lexmark consistently tests its printers with recycled paper (20–100% post-consumer waste) and a variety of test paper from around the world, using chamber tests for different temperature and humidity conditions. Lexmark has found no reason to discourage the use of today's recycled office papers, but generally the following property guidelines apply to recycled paper.

- Low moisture content (4–5%)
- Suitable smoothness (100–200 Sheffield units, or 140–350 Bendtsen units, European)

  Note: Some much smoother papers (such as premium 24 lb laser papers, 50–90 Sheffield units) and much rougher papers (such as premium cotton papers, 200–300 Sheffield units) have been engineered to work very well in laser printers, despite surface texture. Before using these types of paper, consult your paper supplier.
- Suitable sheet-to-sheet coefficient of friction (0.4–0.6)
- Sufficient bending resistance in the direction of feed

Recycled paper, paper of lower weight (<60 g/m^2 [16 lb bond]) and/or lower caliper (<3.8 mils [0.1 mm]), and paper that is cut grain-short for portrait (or short-edge) fed printers may have lower bending resistance than is required for reliable paper feeding. Before using these types of paper for laser (electrophotographic) printing, consult your paper supplier. Remember that these are general guidelines only and that paper meeting these guidelines may still cause paper feeding problems in any laser printer (for example, if the paper curls excessively under normal printing conditions).

Supported paper sizes, types, and weights

The following tables provide information on standard and optional paper sources and the types of paper they support.

Note: For an unlisted paper size, configure a Universal Paper Size.

For information on card stock and labels, see the *Card Stock & Label Guide* on the Lexmark Web site at **http://support.lexmark.com**.

Paper sizes supported by the printer

Paper size	Dimensions	250- or 550-sheet trays (standard or optional)	Optional 2000-sheet tray	Multipurpose feeder	Duplex unit
A4	210 x 297 mm (8.3 x 11.7 in.)	✓	✓	✓	✓
A5	148 x 210 mm (5.8 x 8.3 in.)	✓	X	✓	✓
A6[1,2]	105 x 148 mm (4.1 x 5.8 in.)	X	X	✓	X
JIS B5	182 x 257 mm (7.2 x 10.1 in.)	✓	X	✓	✓
Letter	216 x 279 mm (8.5 x 11 in.)	✓	✓	✓	✓
Legal	216 x 356 mm (8.5 x 14 in.)	✓	✓	✓	✓
Executive	184 x 267 mm (7.3 x 10.5 in.)	✓	X	✓	✓
Oficio[1]	216 x 340 mm (8.5 x 13.4 in.)	✓	X	✓	✓

[1] This size appears in the Paper Size menu only when the paper source does not support size sensing or when size sensing is turned off.

[2] Only the standard exit bin supports this size.

[3]This size setting formats the page for 216 x 356 mm (8.5 x 14 in.) unless the size is specified by the software application.

[4] To support duplexing, the Universal width must be between 148 mm (5.8 in) and 216 mm (8.5 in); Universal length must be between 182 mm (7.2 in) and 356 mm (14 in).

Paper size	Dimensions	250- or 550-sheet trays (standard or optional)	Optional 2000-sheet tray	Multipurpose feeder	Duplex unit
Folio[1]	216 x 330 mm (8.5 x 13 in.)	✓	X	✓	✓
Statement[1]	140 x 216 mm (5.5 x 8.5 in.)	✓	X	✓	X
Universal[3,4]	138 x 210 mm (5.5 x 8.3 in.) up to 216 x 356 mm (8.5 x 14 in.)	✓	X	✓	X
	70 x 127 mm (2.8 x 5 in.) up to 216 x 356 mm (8.5 x 14 in.)	X	X	✓	X
	148 x 182 mm (5.8 x 7.7 in.) up to 216 x 356 mm (8.5 x 14 in.)	✓	X	✓	✓
7 3/4 Envelope (Monarch)	98 x 191 mm (3.9 x 7.5 in.)	X	X	✓	X
9 Envelope	98 x 225 mm (3.9 x 8.9 in.)	X	X	✓	X
10 Envelope	105 x 241 mm (4.1 x 9.5 in.)	X	X	✓	X
DL Envelope	110 x 220 mm (4.3 x 8.7 in.)	X	X	✓	X
Other Envelope	98 x 162 mm (3.9 x 6.4 in.) to 176 x 250 mm (6.9 x 9.8 in.)	X	X	✓	X

[1] This size appears in the Paper Size menu only when the paper source does not support size sensing or when size sensing is turned off.

[2] Only the standard exit bin supports this size.

[3]This size setting formats the page for 216 x 356 mm (8.5 x 14 in.) unless the size is specified by the software application.

[4] To support duplexing, the Universal width must be between 148 mm (5.8 in) and 216 mm (8.5 in); Universal length must be between 182 mm (7.2 in) and 356 mm (14 in).

Note: An optional 250-sheet Universally Adjustable Tray is available for sizes smaller than A5, such as index cards.

Paper types and weights supported by the printer

The printer engine supports 60–176 g/m^2 (16–47 lb) paper weights. The duplex unit supports 63–170 g/m^2 (17–45 lb) paper weights.

Paper type	250- or 550-sheet trays (standard or optional)	Optional 2000-sheet tray	Multipurpose feeder	Duplex unit
Paper • Plain • Bond • Colored • Custom • Letterhead • Light • Heavy • Preprinted • Rough/Cotton • Recycled	✓	✓	✓	✓
Card stock	✓	✓	✓	✓
Envelopes	X	X	✓	X
Labels [1] • Paper • Vinyl	✓	✓	✓	✓
Transparencies	✓	✓	✓	✓
[1] Printing labels requires a special label fuser cleaner which prevents duplexing. The label fuser cleaner is included with the special cartridge required for label applications.				

Paper types and weights supported by the finisher

Use this table to determine the possible output destinations of print jobs which use supported paper types and weights. The paper capacity of each output bin is listed in parentheses. Paper capacity estimations are calculated based on 75 g/m^2 (20 lb) paper.

The Finisher supports 60–176 g/m^2 (16–47 lb) paper weights.

Paper type	Finisher standard bin (250 or 550 sheets)	Output Expander (550 sheets) or High Capacity Output Stacker (1850 sheets)	5-Bin Mailbox (500 sheets)[1]	StapleSmart™ Finisher (500 sheets[2])
Paper • Plain • Bond • Colored • Custom • Letterhead • Light • Heavy • Preprinted • Rough/Cotton • Recycled	✓	✓	✓	✓
Card stock	✓	✓	X	✓
Envelopes	✓	✓	X	X
Labels [3] • Paper • Vinyl	✓	✓	X	X
Transparencies	✓	✓	X	X

[1] Supports 60-90 g/m^2 (16-24 lb) paper weights.

[2] Maximum of 50 sheets per stapled packet.

[3] Printing labels requires a special label fuser cleaner which prevents duplexing. The label fuser cleaner is included with the special cartridge required for label applications.

Tools required for service

- Flat-blade screwdrivers, various sizes
- #1 Phillips screwdriver, magnetic
- #2 Phillips screwdriver, magnetic
- #2 Phillips screwdriver, magnetic short-blade
- Needle-nose pliers
- Diagonal side cutters
- Spring hook
- Feeler gauges

- Analog or digital multimeter
- Flashlight (optional)

Diagnostic information

CAUTION—SHOCK HAZARD: Remove the power cord from the electrical outlet before you connect or disconnect any cable or electronic card or assembly for personal safety and to prevent damage to the printer. Disconnect any connections between the printer and PCs/peripherals.

CAUTION—SHOCK HAZARD: If the printer is kept on, never touch the conductive parts if not specifically required. The power switch and inlet of the low voltage power supply card (LVPS card) assembly is live even while the power supply is cut off. Never touch the live parts.

CAUTION—POTENTIAL INJURY: The printer weight is greater than 18 kg (40 lb) and requires two or more trained personnel to lift it safely. Use the hand holds on the side of the printer. Make sure your fingers are not under the printer when you lift or set the printer on the floor or another stable surface.

CAUTION—HOT SURFACE: The inside of the printer might be hot. To reduce the risk of injury from a hot component, allow the surface to cool before touching it.

Warning—Potential Damage: When operating the driving units using the diagnostics or other tools, be sure to keep them covered unless otherwise specified.

Warning—Potential Damage: When operating the driving units using the diagnostics or other tools, never touch the driving units. When operating the driving units using diagnostics or other tools, be sure to follow the procedures in this manual.

Warning—Potential Damage: Servicers should wear a wrist band or the like to remove static electricity from their body, grounding their body while working. Go to **“Handling ESD-sensitive parts” on page 290**.

Note: There may be printer error messages that are not contained in this service manual. Call your next level support for assistance.

Troubleshooting overview

Performing the initial troubleshooting check

Before you start the troubleshooting procedures, perform the following checks:

- With the power cord unplugged from the electrical outlet, check that the cord is free from the breakage, short circuits, disconnected wires, or incorrect connections.

- Make sure the printer is properly grounded. Check the power cord ground terminal.
- Make sure the power supply line voltage is within 10% of the rated line voltage.
- Make sure the machine is securely installed on a level surface in a well-ventilated area.
- Make sure the room temperature is between 16 and 32°C (60 and 90°F) and that the relative humidity is between 20 and 80%.
- Avoid sites generating ammonia gas, high temperature, high humidity (near water faucets, kettles, humidifiers), cold spaces, near open flames, and dusty areas.
- Avoid sites exposed to direct sunlight.
- Make sure the paper is the recommended paper for this printer.
- Make a trial print with paper from a newly opened package, and check the result.

Power-on Reset (POR) sequence

When you turn on the printer, it performs a POR sequence.

Check for correct POR functioning of the base printer by observing the following:

1. The control panel indicator light turns on.
2. The control panel display turns on.
3. A splash screen appears on the display.
4. The cooling fan turns on.
5. The fuser heater turns on.

   Note: The fuser takes longer to warm up from a cold start than from a warm start.
6. The main drive motor turns on.
7. The EP drive assembly drives the developer shaft located in the imaging unit.
8. The exit rollers turn.
9. The control panel indicator light blinks.
10. **`Ready`** appears on the display.

Using Safe Mode

Safe Mode lets the printer continue to operate in a special limited mode in which it attempts to continue offering as much functionality as possible despite known issues.

Warning—Potential Damage: Safe Mode is intended as a short-term workaround and should be used only in the case of a non-critical error when a print job must be completed before service can be arranged to repair the printer. The printer must be returned to standard operating mode before diagnostics can be run or full-function printing can continue.

You can enter Safe Mode in one of the following ways:

- Enable Safe Mode from the Configuration menu, and then POR the printer.
- Press the **Stop** and **Back** keys, and then POR the printer.

Return the printer to standard operating mode to service the printer and return to full-function printing.

Safe mode print behavior

The following table outlines the behavior for this printer model while in Safe Mode:

Safe Mode engine features	Engine behavior	Control panel behavior
Simplex printing only	Will report that no duplexer is installed.	Duplex print option will not be selectable.
Ignore duplex sensor		
Ignore bin full sensor	Bin full messages will not be reported.	Bin full messages will not occur.
Print at narrow media operating point	Pages will be printed slower.	N/A
Ignore narrow media sensor	Narrow media will print without restrictions.	N/A
Ignore all input options	Will report that only Tray 1 is installed.	Only Tray 1 and the MPF will be selectable.
Ignore all output options	Will not report any installed finishing options.	Finishing options will not be selectable.
Use large interpage gaps	Pages will have large interpage gaps.	N/A

Fixing print quality issues

The symptoms described in this chapter might require replacement of one or more CRUs (Customer Replaceable Units) designated as supplies or maintenance items, which are the responsibility of the customer. With the customer's permission, you might need to install a toner cartridge.

Initial print quality check

Before troubleshooting specific print problems, complete the following initial print quality check:

- The printer must be in a location that follows the recommended operating environment specifications.
- Check the life status of all supplies. Any supply that is low should be replaced.
- Load 20-lb plain letter or A4 paper. Make sure the paper guides are properly set and locked. From the control panel, set the paper size and type to match the paper loaded in the tray.
- Print a menu settings page. Be sure to keep the original menu settings page to restore the customer's custom settings if needed.
- Verify on the menu settings page if the following are set to their default values:
  - Print resolution: 600 dpi
  - Toner darkness: 8
- Check the transfer roll for damage. Replace if damaged.
- Check the toner cartridge and imaging unit for damage. Replace if damaged.
- Print the print quality pages to see if the problem remains. Use Tray 1 to test print quality problems.
- Print a print quality test page, and then look for variations in the print from what is expected. Verify if the settings under EP Setup are set to their default values. Go to **"EP Defaults" on page 274**.
- Check to ensure the correct printer driver for the installed software is being used. An incorrect printer driver for the installed software can cause problems. Incorrect characters could print, and the copy may not fit the page correctly.

Faint print (low contrast) check

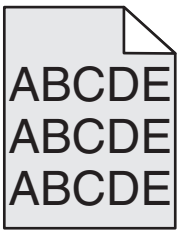

Action	Yes	No
Step 1 Check the media condition. Load new, dry, recommended media, and perform a print test. Does the problem remain?	Go to step 2.	The problem is solved.
Step 2 Check the toner level, and if necessary, replace the print cartridge. Does the problem remain?	Go to step 3.	The problem is solved.
Step 3 Check the transfer roll assembly for contamination and wear, and if necessary, replace the transfer roll assembly. Go to **"Transfer roll assembly removal" on page 351**. Does the problem remain?	Go to step 4.	The problem is solved.
Step 4 Check the print cartridge for proper installation, and if necessary, clean and reinstall the print cartridge. Does the problem remain?	Go to step 5.	The problem is solved.
Step 5 Check the laser beam route and the printhead assembly window. Make sure that the route is free of debris and the glass window is free of contamination. Does the problem remain?	Go to step 6.	The problem is solved.
Step 6 Check the HVPS card assembly for proper connection, and if necessary, replace the connection. Does the problem remain?	Go to step 7.	The problem is solved.
Step 7 Replace the HVPS card assembly. Go to **"HVPS card assembly removal" on page 324**. Does the problem remain?	Go to step 8.	The problem is solved.
Step 8 Check the printhead assembly for proper connection, and if necessary, replace the connection. Does the problem remain?	Go to step 9.	The problem is solved.

Action	Yes	No
Step 9 Replace the printhead assembly. Go to **"Printhead assembly removal" on page 377**. Does the problem remain?	Contact the next level of support.	The problem is solved.

Repeating defects check

Actions	Yes	No
Step 1 If the distance between defects is equal to 1.11 inch (28.3 mm), then replace the charge rollers. Does the problem remain?	Contact next level of support.	Problem is solved.
Step 2 If the distance between defects is equal to 2.04 inches (80 mm), then replace the transfer roller. Does the problem remain?	Contact next level of support.	Problem is solved.
Step 3 If the distance between defects is equal to one of the following, then replace the print cartridge. • 1.88 in. (47.8 mm) • 3.81 in. (96.8 mm) Does the problem remain?	Contact next level of support.	Problem is solved.
Step 4 If the distance between defects is equal to one of the following, then replace the fuser. • 3.46 in. (88.0 mm) • 3.75 in. (95.2 mm) Does the problem remain?	Contact next level of support.	Problem is solved.

Blank pages check

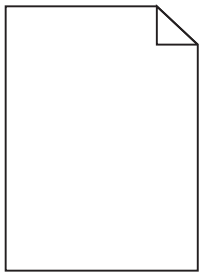

Action	Yes	No
Step 1 Check the media condition. Load new, dry, recommended media, and perform a print test. Does the problem remain?	Go to step 2.	The problem is solved.
Step 2 Check the toner level, and if necessary, replace the print cartridge. Does the problem remain?	Go to step 3.	The problem is solved.
Step 3 Check the transfer roll assembly for proper installation, and if necessary, remove and then reinstall the assembly. Go to **"Transfer roll assembly removal" on page 351**. Does the problem remain?	Go to step 4.	The problem is solved.
Step 4 Check the left and right transfer roll brackets for damage, and if necessary, replace the brackets. Go to **"Left transfer roll bracket assembly removal" on page 352** and **"Right transfer roll bracket assembly removal" on page 353**. Does the problem remain?	Go to step 5.	The problem is solved.
Step 5 Check the transfer roll assembly for contamination and wear, and if necessary, replace the transfer roll assembly. Go to **"Transfer roll assembly removal" on page 351**. Does the problem remain?	Go to step 6.	The problem is solved.
Step 6 Check the print cartridge for proper installation, and if necessary, clean and reinstall the print cartridge. Does the problem remain?	Go to step 7.	The problem is solved.
Step 7 Check if the laser beam route and the printhead assembly window are free of debris and contamination. Does the problem remain?	Go to step 8.	The problem is solved.
Step 8 Check the HVPS card assembly for proper connection, and if necessary, replace the connection. Does the problem remain?	Go to step 9.	The problem is solved.

Action	Yes	No
Step 9 Check the printhead assembly for proper connection, and if necessary, replace the connection. Does the problem remain?	Go to step 10.	The problem is solved.
Step 10 Check the system card assembly for proper connection, and if necessary, replace the connection. Does the problem remain?	Go to step 11.	The problem is solved.
Step 11 Replace the system card assembly. Go to **"System card assembly removal" on page 321**. Does the problem remain?	Contact the next level of support.	The problem is solved.

Solid black pages check

Action	Yes	No
Step 1 Inspect, clean, and reinstall the print cartridge. Does the problem remain?	Go to step 2.	Problem is solved.
Step 2 Check the charge roll assembly for proper installation, and if necessary, reinstall the charge roll assembly properly. Does the problem remain?	Go to step 3.	Problem is solved.
Step 3 Check the charge roll electrical contact for damage, and if necessary, replace the charge roll assembly. Go to **"Charge roll assembly removal" on page 335**. Does the problem remain?	Go to step 4.	Problem is solved.

Action	Yes	No
Step 4 Check the HVPS for proper installation, and if necessary, reinstall the HVPS properly. Does the problem remain?	Go to step 5.	Problem is solved.
Step 5 Check the high voltage metal contacts between the imaging unit and the HVPS for damage. If necessary, repair or replace the contacts. Does the problem remain?	Go to step 6.	Problem is solved.
Step 6 Check with a voltmeter if the electrical resistance of the high voltage metal contacts between the imaging unit and the HVPS is less than 1 ohm? Does the problem remain?	Go to step 7.	Problem is solved.
Step 7 Check the high voltage metal contacts between the imaging unit and the HVPS for contamination by toner or dust. If necessary, clean or replace the contacts. Does the problem remain?	Go to step 8.	Problem is solved.
Step 8 Check the high voltage contacts on the imaging unit for damage, and if necessary, replace the imaging unit. Does the problem remain?	Go to step 9.	Problem is solved.
Step 9 Check the cable connections between the HVPS and the system card, and if necessary, reconnect or replace the cables. Does the problem remain?	Go to step 10.	Problem is solved.
Step 10 Check the HVPS for damage, and if necessary, replace the HVPS. Go to **"HVPS card assembly removal" on page 324**. Does the problem remain?	Go to step 11.	Problem is solved.
Step 11 Check the system card for damage, and if necessary, replace the HVPS. Go to **"System card assembly removal" on page 321**. Does the problem remain?	Contact your next level of support.	Problem is solved.

Vertical lines and bands (process direction) check

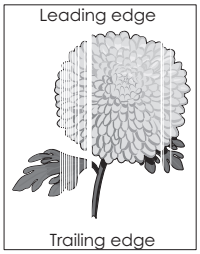

Action	Yes	No
Step 1 Check the media condition. Load new, dry, recommended media. Reprint the defective image. Does the problem remain?	Go to step 2.	The problem is solved.
Step 2 Check if the media transfer route and the media path are free of debris and contamination. Does the problem remain?	Go to step 3.	The problem is solved.
Step 3 Check if the laser beam route and the printhead assembly window are free of debris and contamination. Does the problem remain?	Go to step 4.	The problem is solved.
Step 4 Check the print cartridge for proper installation, and if necessary, clean and reinstall the print cartridge. Does the problem remain?	Go to step 5.	The problem is solved.
Step 5 Check the transfer roll assembly for contamination and wear, and if necessary, replace the transfer roll assembly. Go to **"Transfer roll assembly removal" on page 351**. Does the problem remain?	Go to step 6.	The problem is solved.
Step 6 Check the printhead assembly for proper connection, and if necessary, replace the connection. Does the problem remain?	Go to step 7.	The problem is solved.

Action	Yes	No
Step 7 Replace the printhead assembly. Go to **"Printhead assembly removal" on page 377**. Does the problem remain?	Contact the next level of support.	The problem is solved.

Horizontal white stripes and bands (side to side direction) check

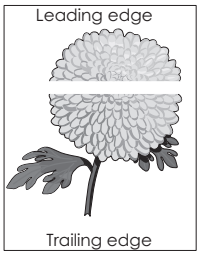

Action	Yes	No
Step 1 Check the media condition. Load new, dry, recommended media. Reprint the defective image. Does the problem remain?	Go to step 2.	The problem is solved.
Step 2 Make sure that the media transfer route and the media path are free of contamination and debris. Does the problem remain?	Go to step 3.	The problem is solved.
Step 3 Check the toner level, and if necessary, replace the print cartridge. Does the problem remain?	Go to step 4.	The problem is solved.
Step 4 Check the transfer roll assembly for contamination and wear, and if necessary, replace the transfer roll assembly. Go to **"Transfer roll assembly removal" on page 351**. Does the problem remain?	Go to step 5.	The problem is solved.
Step 5 Check the printhead assembly for proper connection, and if necessary, replace the connection. Does the problem remain?	Go to step 6.	The problem is solved.

Action	Yes	No
Step 6 Replace the printhead assembly. Go to **“Printhead assembly removal” on page 377**. Does the problem remain?	Contact the next level of tech support.	The problem is solved.

Vertical stripes (process direction) check

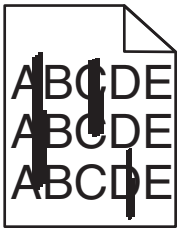

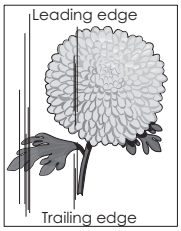

Action	Yes	No
Step 1 Check the media condition. If necessary, load new, dry, recommended media, and then reprint the defective image. Does the problem remain?	Go to step 2.	Problem is solved.
Step 2 Remove contamination and debris from the media transfer route and the media path. Does the problem remain?	Go to step 3.	Problem is solved.
Step 3 Check the charge roll assembly for contamination and wear, and if necessary, replace the charge roll assembly. Go to **“Charge roll assembly removal” on page 335**. Does the problem remain?	Go to step 4.	Problem is solved.
Step 4 Check the transfer roll assembly for contamination and wear, and if necessary, replace the transfer roll assembly. Go to **“Transfer roll assembly removal” on page 351**. Does the problem remain?	Go to step 5.	Problem is solved.
Step 5 Check the print cartridge for proper installation, and if necessary, clean and reinstall the print cartridge. Does the problem remain?	Go to step 6.	Problem is solved.

Action	Yes	No
Step 6 Check the heat roll and pressure roll. If necessary, remove and then reinstall the fuser unit assembly. Go to **“Fuser unit assembly removal” on page 373**. **CAUTION—HOT SURFACE:** Allow the fuser unit assembly to cool down. Does the problem remain?	Go to step 7.	Problem is solved.
Step 7 Replace the fuser unit assembly. Go to **“Fuser unit assembly removal” on page 373**. Does the problem remain?	Contact next level of support.	Problem is solved.

Horizontal stripes (side to side direction) check

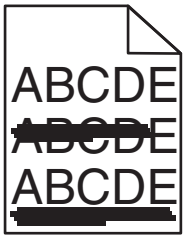

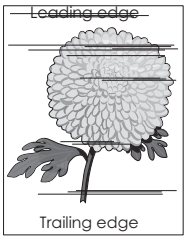

Action	Yes	No
Step 1 Check the media condition. If necessary, load new, dry, recommended media, and then reprint the defective image. Does the problem remain?	Go to step 2.	Problem is solved.
Step 2 Remove contamination or obstacles from the media transfer route. Does the problem remain?	Go to step 3.	Problem is solved.
Step 3 Check the print cartridge for proper installation, and if necessary, clean and reinstall the print cartridge. Does the problem remain?	Go to step 4.	Problem is solved.

Action	Yes	No
Step 4 Check the charge roll assembly for contamination and wear, and if necessary replace the charge roll assembly. Go to **"Access door removal" on page 308**. Does the problem remain?	Go to step 5.	Problem is solved.
Step 5 Check the transfer roll assembly for contamination and wear, and if necessary, replace the transfer roll assembly. Go to **"Transfer roll assembly removal" on page 351**. Does the problem remain?	Go to step 6.	Problem is solved.
Step 6 Check the heat roll and pressure roll. If necessary, remove and then reinstall the fuser unit assembly. **CAUTION—HOT SURFACE:** Allow the fuser unit assembly to cool. Does the problem remain?	Go to step 7.	Problem is solved.
Step 7 Replace the fuser unit assembly. Go to **"Fuser unit assembly removal" on page 373**. Does the problem remain?	Go to step 8.	Problem is solved.
Step 8 Check the HVPS card assembly for proper connection, and if necessary, replace the connection. Does the problem remain?	Go to step 9.	Problem is solved.
Step 9 Replace the HVPS card assembly. Go to **"HVPS card assembly removal" on page 324**. Does the problem remain?	Contact the next level of support.	Problem is solved.

Partial lack check

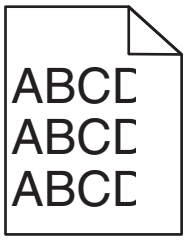

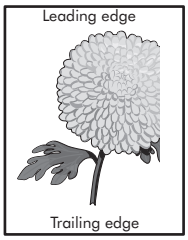

Action	Yes	No
Step 1 Check the media condition. Load new, dry, recommended media. Reprint the defective image. Does the problem remain?	Go to step 2.	The problem is solved.
Step 2 Check the toner level, and if necessary, replace the print cartridge. Does the problem remain?	Go to step 3.	The problem is solved.
Step 3 Check the laser beam route and the printhead assembly window. Make sure that the route is free of debris and the glass window is free of contamination. Does the problem remain?	Go to step 4.	The problem is solved.
Step 4 Check the transfer roll assembly for contamination and wear, and if necessary, replace the transfer roll assembly. Go to **"Transfer roll assembly removal" on page 351**. Does the problem remain?	Go to step 5.	The problem is solved.
Step 5 Check the printhead assembly for proper installation. Go to **"Printhead assembly removal" on page 377**. Does the problem remain?	Contact the next level of support.	The problem is solved.

Spots check

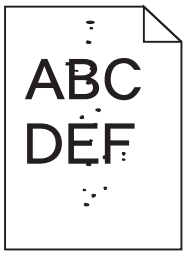

Action	Yes	No
Step 1 Check the media condition. Load new, dry, recommended media. Reprint the defective image. Does the problem remain?	Go to step 2.	The problem is solved.
Step 2 Check if the media transfer route is free of debris and contamination. Does the problem remain?	Go to step 3.	The problem is solved.
Step 3 Check the print cartridge for any damage and contamination, and if necessary, replace the cartridge. Does the problem remain?	Go to step 4.	The problem is solved.
Step 4 Check the charge roll assembly for contamination and wear, and if necessary, replace the charge roll assembly. Go to **"Charge roll assembly removal" on page 335**. Does the problem remain?	Go to step 5.	The problem is solved.
Step 5 Check the transfer roll assembly for contamination and wear, and if necessary, replace the transfer roll assembly. Go to **"Transfer roll assembly removal" on page 351**. Does the problem remain?	Go to step 6.	The problem is solved.
Step 6 Check the heat roll and pressure roll. Remove, and then reinstall the fuser unit assembly. Go to **"Fuser unit assembly removal" on page 373**. **CAUTION—HOT SURFACE:** Allow the fuser unit assembly to cool down. Does the problem remain?	Go to step 7.	The problem is solved.
Step 7 Replace the fuser unit assembly. Go to **"Fuser unit assembly removal" on page 373** Does the problem remain?	Go to step 8.	The problem is solved.

Action	Yes	No
Step 8 Check the printhead assembly for proper installation and damage, and if necessary, replace the printhead assembly. Does the problem remain?	Contact the next level of support.	The problem is solved.

Background (fog) check

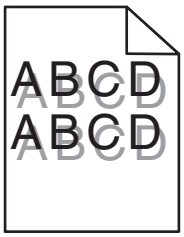

Action	Yes	No
Step 1 Check the media condition. Load new, dry, recommended media. Reprint the defective image. Does the problem remain?	Go to step 2.	The problem is solved.
Step 2 Check if the media transfer route is free of contamination or debris. Does the problem remain?	Go to step 3.	The problem is solved.
Step 3 Check the print cartridge for proper installation and damage, and if necessary, replace the cartridge. Does the problem remain?	Go to step 4.	The problem is solved.
Step 4 Check the transfer roll assembly for contamination and wear, and if necessary, replace the transfer roll assembly. Go to **"Transfer roll assembly removal" on page 351**. Does the problem remain?	Go to step 5.	The problem is solved.
Step 5 Check the HVPS card assembly for proper connection, and if necessary, replace the connection. Does the problem remain?	Go to step 6.	The problem is solved.

Action	Yes	No
Step 6 Check the printhead assembly for proper installation. Go to **“Printhead assembly removal” on page 377**. Does the problem remain?	Contact the next level of support.	The problem is solved.

Skew check

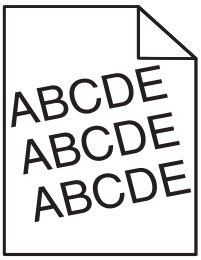

Action	Yes	No
Step 1 Check the printer installation placement for installation surface irregularities. Check the printer caster for any damage. If necessary, correct the installation placement. Does the problem remain?	Go to step 2.	The problem is solved.
Step 2 Properly load media into the media tray assembly and set all guides correctly. Properly reinstall the media tray assembly into the printer. Does the problem remain?	Go to step 3.	The problem is solved.
Step 3 Check the area of the media feed units for obstructions, and remove them if necessary. Does the problem remain?	Go to step 4.	The problem is solved.
Step 4 Check the transfer roll assembly for contamination and wear, and replace the transfer roll assembly if necessary. Go to **“Transfer roll assembly removal” on page 351**. Does the problem remain?	Go to step 5.	The problem is solved.

Action	Yes	No
Step 5 Check the alignment assembly for proper adjustment. Go to **“Alignment assembly adjustment” on page 305**. If necessary, replace the alignment assembly. Go to **“Output cover assembly removal (models X651, X652, X654, X656)” on page 376** or **“Output cover assembly removal (model X658)” on page 377**. Does the problem remain?	Go to step 6.	The problem is solved.
Step 6 Perform a print test. Does the problem remain?	Contact the next level of support.	The problem is solved.

Media damage check

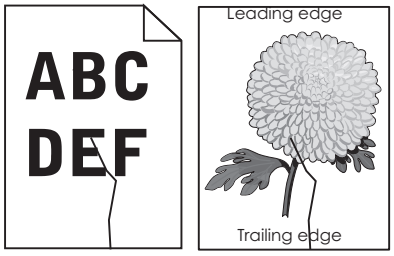

Action	Yes	No
Step 1 Check the printer installation placement for installation surface irregularities. Check the printer caster for any damage. If necessary, correct the installation placement. Does the problem remain?	Go to step 2.	Problem is solved.
Step 2 Properly load media into the media tray assembly and set all guides correctly. Properly reinstall the media tray assembly into the printer. Does the problem remain?	Go to step 3.	Problem is solved.
Step 3 Check the media condition, and load new, dry, recommended media if necessary. Does the problem remain?	Go to step 4.	Problem is solved.

Action	Yes	No
Step 4 Check the transfer roll assembly for contamination and wear, and replace the transfer roll assembly if necessary. Go to **"Transfer roll assembly removal" on page 351**. Does the problem remain?	Go to step 5.	Problem is solved.
Step 5 Check the alignment assembly for proper adjustment. Go to **"Alignment assembly adjustment" on page 305**. If necessary, replace the aligner assembly. Go to **"Alignment assembly removal" on page 309**. Does the problem remain?	Go to step 6.	Problem is solved.
Step 6 Remove the fuser unit assembly, and then check the heat roll and pressure roll for contamination or cracks. If necessary, replace the fuser unit assembly. Go to **"Fuser unit assembly removal" on page 373**. **CAUTION—HOT SURFACE:** Allow the fuser unit assembly to cool down. Does the problem remain?	Contact the next level of support.	Problem is solved.

No fuse check

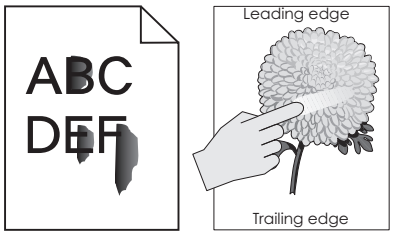

Action	Yes	No
Step 1 Adjust the printer media settings to match the media type loaded. Does the problem remain?	Go to step 2.	The problem is solved.
Step 2 Check the fuser unit assembly for proper installation. If necessary, remove and then reinstall the assembly. Does the problem remain?	Go to step 3.	The problem is solved.

Action	Yes	No
Step 3 Check the media condition. Load new, dry, recommended media. Does the problem remain?	Go to step 4.	The problem is solved.
Step 4 Check the heat roll and pressure roll. Remove, and then reinstall the fuser unit assembly. **CAUTION—HOT SURFACE:** Allow the fuser unit assembly to cool down Does the problem remain?	Go to step 5.	The problem is solved.
Step 5 Replace the fuser unit assembly. Go to **"Fuser unit assembly removal" on page 373**. Does the problem remain?	Go to step 6.	The problem is solved.
Step 6 Check the LVPS card assembly for proper connection, and if necessary, replace the connection. Does the problem remain?	Go to step 7.	The problem is solved.
Step 7 Replace the LVPS card assembly. Go to **"LVPS card assembly removal" on page 328**.	Contact the next level of support.	The problem is solved.

Paper jams

Avoiding jams

Load paper properly

- Make sure that the paper lies flat in the tray.
- Do not remove a tray while the printer is printing.
- Do not load a tray while the printer is printing. Load it before printing, or wait for a prompt to load it.
- Do not load too much paper. Make sure that the stack height is below the maximum paper fill indicator.
- Do not slide paper into the tray. Load paper as shown in the illustration.

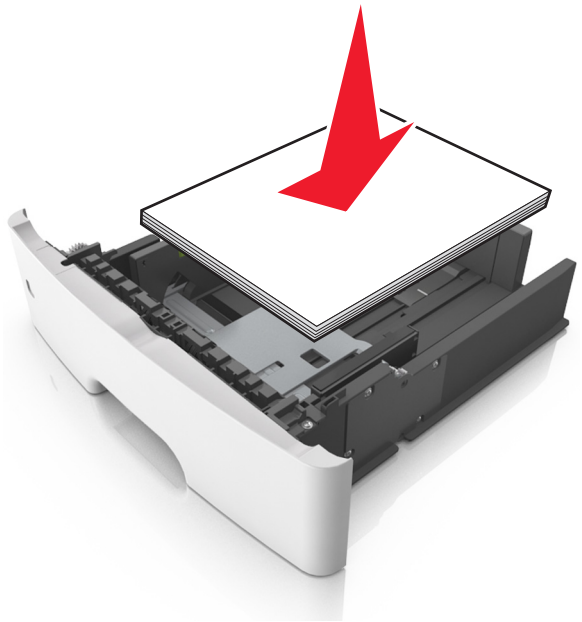

- Make sure that the paper guides are properly positioned.
- Push the tray firmly into the printer after loading paper.

Use recommended paper

- Use only recommended paper or specialty media.
- Do not load wrinkled, creased, damp, bent, or curled paper.
- Flex, fan, and straighten paper before loading it.

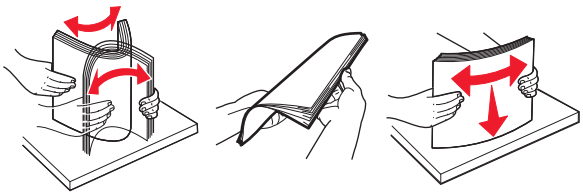

- Do not use paper that has been cut or trimmed by hand.
- Do not mix paper sizes, weights, or types in the same tray.
- Make sure that the paper size and type are set correctly on the Embedded Web Server or the computer.

  Note: Depending on your operating system, access the Paper menu using Local Printer Settings Utility or Printer Settings.
- Store paper according to manufacturer recommendations.

Understanding jam messages and locations

When a jam occurs, a message indicating the jam location and information to clear the jam appears on the printer display. Open the doors, covers, and trays indicated on the display to remove the jam.

Notes:

- When Jam Assist is set to On, the printer automatically flushes blank pages or pages with partial prints to the standard bin after a jammed page has been cleared. Check your printed output stack for discarded pages.
- When Jam Recovery is set to On or Auto, the printer reprints jammed pages. However, the Auto setting does not guarantee that the page will print.

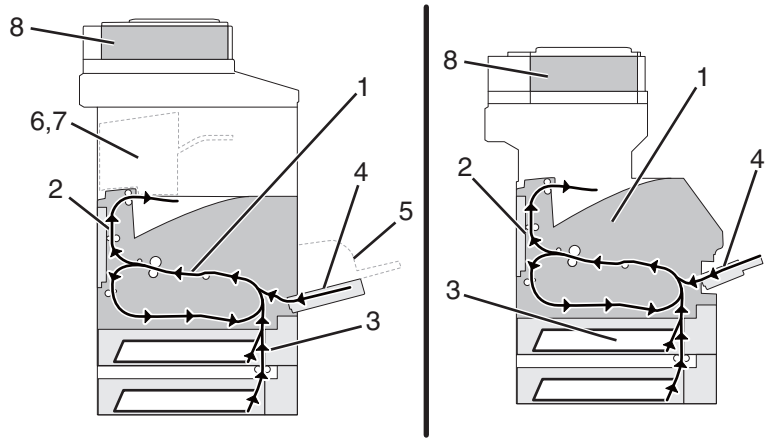

	Jam access area	Printer control panel message	What to do
1	Automatic document feeder (ADF)	[x]-page jam, open ADF to clear jam. [28y.xx]	Remove all paper from the ADF tray, and then remove the jammed paper.
2	Standard bin	[x]-page jam, clear standard bin. [20y.xx]	Remove the jammed paper.
3	Front door	[x]-page jam, open front door. [20y.xx]	Open the front door, then remove the toner cartridge and imaging unit, and then the jammed paper.
4	Multipurpose feeder	[x]-page jam, clear manual feeder. [25y.xx]	Remove all paper from the multipurpose feeder, and then remove the jammed paper.
5	Tray 1	[x]-page jam, remove tray 1 to clear duplex. [23y.xx]	Pull out tray 1 completely, then push the front duplex flap down, and then remove the jammed paper. **Note:** You may need to open the rear door to clear some 23y.xx paper jams.
6	Tray [x]	[x]-page jam, open tray [x]. [24y.xx]	Pull the indicated tray out, and then remove the jammed paper.
7	Rear door	[x]-page jam, open rear door. [20y.xx]	Open the rear door, and then remove the jammed paper.
8	Finisher rear door	[x]-page jam, remove all pages from the finisher's accumulator. Leave paper in bin [45y.xx]	• Open the finisher rear door, and then remove the jammed paper. • Open the trap door, and then remove the jammed paper.

	Jam access area	Printer control panel message	What to do
9	Finisher output bin	[x]-page jam, remove all pages from the output bin. Leave paper in bin [45y.xx]	• Move the left tamper arm to the left and the right tamper arm to the right, and then remove the jammed paper from the finisher bin. • Open the finisher rear door and the trap door, and then remove any jammed pages.

200-201 paper jams

200 and 201 paper jams

1 Touch **Status/Supplies** to identify the location of the jam.

2 Lower the multipurpose feeder door.

3 Push the release latch, and then open the front cover.

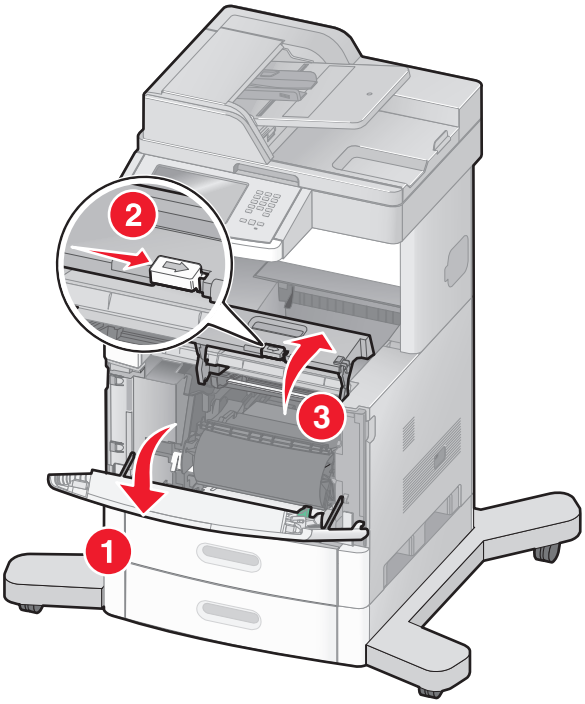

4 Lift and pull the print cartridge out of the printer.

Warning—Potential Damage: Do not touch the photoconductor drum on the underside of the cartridge. Use the cartridge handle whenever you are holding the cartridge.

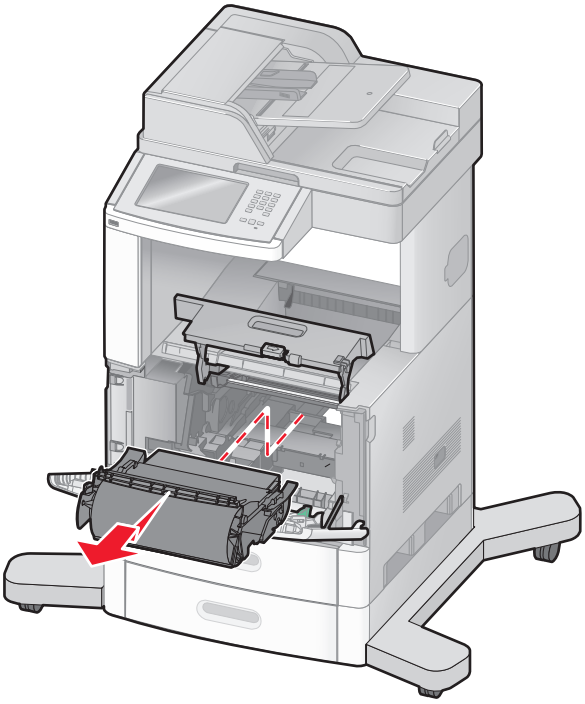

5 Place the print cartridge aside.

Warning—Potential Damage: Do not leave the cartridge exposed to light for extended periods.

Warning—Potential Damage: The jammed paper may be covered with unfused toner which can stain garments and skin.

6 Remove the jammed paper.

CAUTION—HOT SURFACE: The inside of the printer might be hot. To reduce the risk of injury from a hot component, allow the surface to cool before touching.

Note: If the paper is not easy to remove, then open the rear door and remove the paper from there.

7 Align and reinstall the print cartridge.

8 Close the front cover.

9 Close the multipurpose feeder door.

10 Touch **Continue**.

200 error messages

Error code	Description	Action
200.00	Sensor (input) area jam The media is jammed in the sensor (input) area.	Go to **"Sensor (input) service check" on page 70**.
200.01	Sensor (input) lingering jam (MPF, duplex, or envelope feeder) The media reached the sensor (input) but did not clear it within the specified time.	Go to **"Sensor (input) lingering jam service check" on page 70**.
200.02	Sensor (input) lingering jam The media reached the sensor (input) but did not clear it within the specified time.	
200.04	Sensor (input) early jam The media reached the sensor (input) sooner than the specified time. Wrong config ID causes engine to assume 500 paper path on 250 model.	Go to **"Sensor (input) early jam service check" on page 72**.
200.06	Sensor (input) early jam The sensor (input) rebounded once the trailing edge of the media passed.	Go to **"Sensor (input) service check" on page 70**.
200.07	Sensor (input) late area jam (input option tray) The media is late reaching the sensor (input) within the specified time.	Go to **"Sensor (input) late jam service check" on page 73**.
200.08	Sensor (input) early jam The media reaches the sensor (input) sooner than the specified time.	Go to **"Sensor (input) early jam service check" on page 72**.
200.09	Printhead laser start failure The printhead laser start process failed because it did not receive proper feedback signal from the printhead motor.	Go to **"Printhead laser start failure service check" on page 77**.
200.10	Printhead motor synchronization error The printhead motor is not synchronized when media reaches the sensor (input).	
200.11	Printhead polygon mirror synchronization error The printhead polygon mirror motor becomes unsynchronized when the media reaches the sensor (input).	
200.12	Laser power signal error The printhead laser power signal has failed.	
200.13	Sensor (input) static jam Media remains on the sensor (input) during the warm up sequence.	Go to **"Sensor (input) static jam service check" on page 77**.
200.14	Sensor (input) early jam The media reaches the sensor (input) sooner than the specified time.	Go to **"Sensor (input) early jam service check" on page 72**.

Error code	Description	Action
200.15	Laser power did not settle. Laser circuit failure on printhead or system card assembly.	Go to **"Printhead laser start failure service check" on page 77**.
200.16	Main drive motor assembly load error The main drive motor assembly has failed or caused high mechanical load due to paper jam or bind.	Go to **"Main drive motor assembly load error service check" on page 80**.
200.17	Sensor (input) lingering jam (tray 1 and tray level not low) The media reached the sensor (input) but did not clear it within the specified time.	Go to **"Sensor (input) lingering jam service check" on page 70**.
200.18	Sensor (input) lingering jam (tray 1 and tray level low) The media reached the sensor (input) but did not clear it within the specified time.	
200.19	Sensor (input) lingering jam (tray 1 and tray level empty) The media reached the sensor (input) but did not clear it within the specified time.	
200.27	Sensor (input) lingering jam (tray 2 and tray level not low) The media reached the sensor (input) but did not clear it within the specified time.	
200.28	Sensor (input) lingering jam (tray 2 and tray level low) The media reached the sensor (input) but did not clear it within the specified time.	
200.29	Sensor (input) lingering jam (tray 2 and tray level empty) The media reached the sensor (input) but did not clear it within the specified time.	
200.32	Operator panel door assembly switch failure Operator panel door assembly not fully closed. Interlock switch not functioning correctly.	Go to **"Operator panel door assembly switch failure service check" on page 81**.
200.34	Sensor (toner empty) failure The sensor (toner empty) has failed or is not sensing the pulse wheel on the print cartridge.	Go to **"Sensor (toner empty) service check" on page 82**.

Error code	Description	Action
200.37	Sensor (input) lingering jam (tray 3 and tray level not low) The media reached the sensor (input) but did not clear it within the specified time.	Go to **“Sensor (input) lingering jam service check” on page 70**.
200.38	Sensor (input) lingering jam (tray 3 and tray level low) The media reached the sensor (input) but did not clear it within the specified time.	
200.39	Sensor (input) lingering jam (tray 3 and tray level empty) The media reached the sensor (input) but did not clear it within the specified time.	
200.47	Sensor (input) lingering jam (tray 4 and tray level not low) The media reached the sensor (input) but did not clear it within the specified time.	
200.48	Sensor (input) lingering jam (tray 4 and tray level low) The media reached the sensor (input) but did not clear it within the specified time.	
200.49	Sensor (input) lingering jam (tray 4 and tray level empty) The media reached the sensor (input) but did not clear it within the specified time.	
200.57	Sensor (input) lingering jam (tray 5 and tray level not low) The media reached the sensor (input) but did not clear it within the specified time.	
200.58	Sensor (input) lingering jam (tray 5 and tray level low) The media reached the sensor (input) but did not clear it within the specified time.	
200.59	Sensor (input) lingering jam (tray 5 and tray level empty) The media reached the sensor (input) but did not clear it within the specified time.	

201 error messages

Error code	Description	Action
201.00	Sensor (fuser output) area jam (type 1 fuser) The media is jammed in the sensor (fuser output) area.	Go to **"Sensor (fuser output) service check" on page 82**.
201.01	Main drive motor assembly load error (type 1 fuser) The main drive motor assembly has failed or caused high mechanical load due to paper jam or bind.	Go to **"Main drive motor assembly load error service check" on page 80**.
201.02	Sensor (fuser output) late jam (type 1 fuser) The media is late reaching the sensor (fuser output) within the specified time.	Go to **"Sensor (fuser output) late jam service check" on page 83**.
201.03	Image data did not start in time (type 1 fuser) Printhead write failure	Go to **"Printhead write failure service check" on page 85**.
201.04	Sensor (narrow media) late jam (type 1 fuser) The expected wide media is late reaching the sensor (narrow media) within the specified time.	Go to **"Sensor (narrow media) late jam service check" on page 78**.
201.06	Sensor (narrow media) late jam (type 1 fuser) The expected wide media is late reaching the sensor (narrow media) within the specified time.	
201.07	Sensor (fuser output) late jam (type 1 fuser) The media is late reaching the sensor (fuser output) within the specified time.	Go to **"Sensor (fuser output) late jam service check" on page 83**.
201.25	Sensor (fuser output) late jam (type 2 fuser) The media is jammed in the sensor (fuser output) area.	
201.26	Main drive motor assembly load error (type 2 fuser) The main drive motor assembly has failed or caused high mechanical load due to paper jam or bind.	Go to **"Main drive motor assembly load error service check" on page 80**.
201.27	Sensor (fuser output) late jam (type 1 fuser) The media is late reaching the sensor (fuser output) within the specified time.	Go to **"Sensor (fuser output) late jam service check" on page 83**.
201.28	Image data did not start in time (type 2 fuser) Printhead write failure	Go to **"Printhead write failure service check" on page 85**.
201.29	Sensor (narrow media) late jam (type 2 fuser) The expected wide media is late reaching the sensor (narrow media) within the specified time.	Go to **"Sensor (narrow media) late jam service check" on page 78**.

Error code	Description	Action
201.30	Operator panel door assembly interlock switch failure (type 2 fuser) The printer detected that the switch (operator panel door interlock) did not cycle prior to printer restart.	Go to **"Operator panel door assembly switch failure service check" on page 81**.
201.31	Sensor (narrow media) late jam (type 2 fuser) The expected wide media is late reaching the sensor (narrow media) within the specified time.	Go to **"Sensor (narrow media) late jam service check" on page 78**.
201.32	Sensor (fuser output) late jam (type 2 fuser) The media is late reaching the sensor (fuser output) within the specified time.	Go to **"Sensor (fuser output) late jam service check" on page 83**.
201.50	Sensor (fuser output) late jam (type 2 fuser and fuser page count exceeds life) The media is late reaching the sensor (fuser output) within the specified time.	
201.51	Main drive motor assembly load error (type 1 fuser and fuser page count exceeds life) The main drive motor assembly has failed or caused high mechanical load due to paper jam or bind.	Go to **"Main drive motor assembly load error service check" on page 80**.
201.52	Sensor (fuser output) late jam (type 1 fuser and fuser page count exceeds life) The media is late reaching the sensor (fuser output) within the specified time.	Go to **"Sensor (fuser output) late jam service check" on page 83**.
201.53	Image data did not start in time (type 1 fuser and fuser page count exceeds life) Printhead write failure	Go to **"Printhead write failure service check" on page 85**.
201.54	Sensor (narrow media) late jam (type 1 fuser and fuser page count exceeds life) The media is late reaching the sensor (fuser output) within the specified time.	Go to **"Sensor (narrow media) late jam service check" on page 78**.
201.55	Operator panel door assembly interlock switch failure (type 1 fuser and fuser page count exceeds life) The printer detected that the switch (operator panel door interlock) did not cycle prior to printer restart.	Go to **"Operator panel door assembly switch failure service check" on page 81**.
201.56	Sensor (narrow media) late jam (type 1 fuser and fuser page count exceeds life) The media is late reaching the sensor (fuser output) within the specified time.	Go to **"Sensor (narrow media) late jam service check" on page 78**.

Error code	Description	Action
201.57	Sensor (fuser output) late jam (type 1 fuser and fuser page count exceeds life) The media is late reaching the sensor (fuser output) within the specified time.	Go to **"Sensor (fuser output) late jam service check" on page 83**.
201.75	Sensor (fuser output) late jam (type 1 fuser and fuser page count exceeds life) The media is late reaching the sensor (fuser output) within the specified time.	
201.76	Main drive motor assembly load error (type 2 fuser and fuser page count exceeds life) The main drive motor assembly has failed or caused high mechanical load due to paper jam or bind.	Go to **"Main drive motor assembly load error service check" on page 80**.
201.77	Sensor (fuser output) late jam (type 2 fuser and fuser page count exceeds life) The media is late reaching the sensor (fuser output) within the specified time.	Go to **"Sensor (fuser output) late jam service check" on page 83**.
201.78	Image data did not start in time (type 2 fuser and fuser page count exceeds life) Printhead write failure	Go to **"Printhead write failure service check" on page 85**.
201.79	Sensor (narrow media) late jam (type 2 fuser and fuser page count exceeds life) The media is late reaching the sensor (fuser output) within the specified time.	Go to **"Sensor (narrow media) late jam service check" on page 78**.
201.80	Operator panel door assembly interlock switch failure (type 2 fuser and fuser page count exceeds life) The printer detected that the switch (operator panel door interlock) did not cycle prior to printer restart.	Go to **"Operator panel door assembly switch failure service check" on page 81**.
201.81	Sensor (narrow media) late jam (type 2 fuser and fuser page count exceeds life) The media is late reaching the sensor (fuser output) within the specified time.	Go to **"Sensor (narrow media) late jam service check" on page 78**.
201.82	Sensor (narrow media) late jam (type 2 fuser and fuser page count exceeds life) The media is late reaching the sensor (fuser output) within the specified time.	Go to **"Sensor (narrow media) late jam service check" on page 78**.

Sensor (input) service check

Action	Yes	No
Step 1 Fan the media, ensure the media is properly installed and check the paperpath for obstructions. Does the problem remain?	Go to step 2.	Problem is solved.
Step 2 Check the sensor (input) for damage, and if necessary, replace the sensor (input). See **"Sensor (input) removal " on page 334**. Does the problem remain?	Go to step 3.	Problem is solved.
Step 3 **a** Enter the diagnostic mode. **b** Select Base sensor test. **c** Observe the line item "input." Does the display on the operator panel change every time the sensing area of the above sensor is interrupted or blocked?	Problem is solved.	Go to step 4.
Step 4 Check the above sensor for proper connection, and if necessary, replace the connection or the sensor. See **"Sensor (input) removal " on page 334**. Does the problem remain?	Contact next level of support.	Problem is solved.

Sensor (input) lingering jam service check

Action	Yes	No
Step 1 Fan the media, ensure the media is properly installed, and check the paper path for obstructions. Does the problem remain?	Go to step 2.	The problem is solved.
Step 2 Replace the media, or change the media size setup in all the trays. Does the problem remain?	Go to step 3.	The problem is solved.
Step 3 Remove obstructions in the fuser unit assembly. Does the problem remain?	Go to step 4.	The problem is solved.

Action	Yes	No
Step 4 Check the fuser unit assembly for excess wear and damage. If necessary, replace the fuser unit assembly. Go to **"Fuser unit assembly removal" on page 373**. Does the problem remain?	Go to step 5.	The problem is solved.
Step 5 Check the sensor (input) for proper operation. **a** Enter the Diagnostic mode. **b** Select **Base sensor test**. **c** Observe the line item, "input." Does the display on the operator panel change every time the sensing area of the above sensor is interrupted or blocked?	Go to step 7.	Go to step 6.
Step 6 Check the above sensor for proper connection, and if necessary, replace the connection. Go to **"Sensor (input) removal " on page 334**. Does the problem remain?	Go to step 7.	The problem is solved.
Step 7 Check the sensor (fuser output) for proper operation. **a** Enter the Diagnostic mode. **b** Select **Base sensor test**. **c** Observe the line item, "input." **CAUTION—HOT SURFACE:** The area around the actuator is very hot. Allow the fuser area to cool before proceeding. Does the display on the operator panel, change every time the sensing area of the above sensor is interrupted or blocked?	Go to step 9.	Go to step 8.
Step 8 Check the above sensor for proper connection, and if necessary, replace the connection or the fuser unit assembly. Go to **"Fuser unit assembly removal" on page 373**. Does the problem remain?	Go to step 9.	The problem is solved.
Step 9 Perform a print test and check the main motor assembly. If necessary, replace the main drive motor assembly. Go to **"Output cover assembly removal (models X651, X652, X654, X656)" on page 376** or **"Output cover assembly removal (model X658)" on page 377**. Does the problem remain?	Go to step 10.	The problem is solved.

Action	Yes	No
Step 10 Remove obstructions in the aligner assembly. Does the problem remain?	Go to step 11.	The problem is solved.
Step 11 Perform a print test. Does the problem remain?	Contact the next level of support.	The problem is solved.

Sensor (input) early jam service check

Action	Yes	No
Step 1 Fan the media, ensure the media is properly installed, and check the paper path for obstructions. Does the problem remain?	Go to step 2.	Problem is solved.
Step 2 Make sure that media originated from the MPF.	Go to step 3.	Problem is solved.
Step 3 Clean or replace the MPF pick roll assembly. See **"MPF pick roll assembly removal" on page 339**. Does the problem remain?	Go to step 4.	Problem is solved.
Step 4 Perform a MPF print test and check the MPF pick solenoid for proper operation. If necessary, replace the MPF pick solenoid. See **"MPF pick solenoid assembly removal" on page 313**. Does the problem remain?	Go to step 5.	Problem is solved.
Step 5 Check the MPF lift plate assembly for damage. If necessary, replace the MPF lift plate assembly. See **"MPF lift plate assembly removal" on page 338**. Does the problem remain?	Go to step 6.	Problem is solved.
Step 6 Remove and properly reinstall the media. Does the problem remain?	Go to step 7.	Problem is solved.

Action	Yes	No
Step 7 Remove any prestaged or jammed media in all the trays. Does the problem remain?	Go to step 8.	Problem is solved.
Step 8 Check the sensor (input) for proper operation. **a** Enter the diagnostic mode. **b** Select Base sensor test. **c** Observe the line item “input.” Does the display on the operator panel change every time the sensing area of the above sensor is interrupted or blocked?	Go to step 10.	Go to step 9.
Step 9 Check the above sensor for proper connection, and if necessary, replace the connection or the sensor. See **“Sensor (input) removal ” on page 334**. Does the problem remain?	Go to step 10.	Problem is solved.
Step 10 Perform a print test. Does the problem remain?	Contact next level of support.	Problem is solved.

Sensor (input) late jam service check

Action	Yes	No
Step 1 Fan the media, ensure the media is properly installed, and check the paper path for obstructions. Does the problem remain?	Go to step 2.	Problem is solved.
Step 2 Replace the media, or change the media size setup for all the trays. Does the problem remain?	Go to step 3.	Problem is solved.
Step 3 Remove excess media from all the trays. Does the problem remain?	Go to step 4.	Problem is solved.
Step 4 Replace damaged media in all the trays. Does the problem remain?	Go to step 5.	Problem is solved.

Action	Yes	No
Step 5 Remove obstructions in the pass-thru areas of the tray. Does the problem remain?	Go to step 6.	Problem is solved.
Step 6 Make sure that the media originate from the MPF. Does the problem remain?	Go to step 7.	Problem is solved.
Step 7 Clean or replace the MPF pick roll assembly. Go to **"MPF pick roll assembly removal" on page 339**. Does the problem remain?	Go to step 8.	Problem is solved.
Step 8 Perform a MPF print test, and then check the MPF pick solenoid for proper operation. If necessary, replace the MPF pick solenoid. Go to **"MPF pick solenoid assembly removal" on page 313**. Does the problem remain?	Go to step 9.	Problem is solved.
Step 9 Make sure that the media originate from the internal duplex. Does the problem remain?	Go to step 10.	Problem is solved.
Step 10 Remove obstruction in the internal duplex media path. Does the problem remain?	Go to step 11.	Problem is solved.
Step 11 Check the sensor (duplex input) for proper operation. **a** Enter the Diagnostic mode. **b** Select **Duplex tests**. **c** Select **sensor test**. **d** Observe the line item, "input." Does the display on the operator panel change every time the sensing area of the above sensor is interrupted or blocked?	Go to step 13.	Go to step 12.
Step 12 Check the above sensor for proper connection, and if necessary, replace the connection or sensor (duplex input). Go to **"Sensor (duplex input) removal" on page 382**. Does the problem remain?	Go to step 13.	Problem is solved.

Action	Yes	No
Step 13 Perform a print test and check the duplex drive motor assembly for proper operation. If necessary, replace the duplex drive motor assembly. Go to **“Duplex drive motor assembly removal” on page 370**. Does the problem remain?	Go to step 18.	Problem is solved.
Step 14 Make sure the media originate from the external duplex. Does the problem remain?	Go to step 15.	Problem is solved.
Step 15 Make sure that the display on the operator panel changes every time the sensing area of the sensor (duplex input) is interrupted or blocked. **a** Enter the Diagnostic mode. **b** Select **Duplex tests**. **c** Select **sensor test**. **d** Observe the line item, “input.” If necessary, replace the external duplex assembly. Does the problem remain?	Go to step 16.	Problem is solved.
Step 16 Make sure that the display on the operator panel changes every time the sensing area of the sensor (duplex exit) is interrupted or blocked. **a** Enter the Diagnostic mode. **b** Select **Duplex tests**. **c** Select **sensor test**. **d** Observe the line item, “exit.” If necessary, replace the external duplex assembly. Does the problem remain?	Go to step 18.	Problem is solved.
Step 17 Check the two pick roll assemblies in the media tray being picked from. If necessary, clean or replace the pick roll assembly. Go to **“Pick roll assembly removal” on page 362**. Does the problem remain?	Go to step 18.	Problem is solved.
Step 18 Remove obstructions in the aligner assembly. Does the problem remain?	Go to step 19.	Problem is solved.

Action	Yes	No
Step 19 Check the sensor (input) for proper operation. **a** Enter the Diagnostic mode. **b** Select **Base sensor test**. **c** Observe the line item, “input.” Does the problem remain?	Go to step 20.	Problem is solved.
Step 20 Check the above sensor for proper connection. If necessary, replace the connection or sensor (input). Go to **“Sensor (input) removal ” on page 334**. Does the problem remain?	Go to step 21.	Problem is solved.
Step 21 Perform a print test and check the pick arm assembly. If necessary, replace the pick arm assembly. Go to **“Pick arm assembly removal” on page 359**. Does the problem remain?	Go to step 22.	Problem is solved.
Step 22 Perform a print test and check the main motor assembly. If necessary, replace the main drive motor assembly. Go to **“Output cover assembly removal (models X651, X652, X654, X656)” on page 376** or **“Output cover assembly removal (model X658)” on page 377**. Does the problem remain?	Go to step 23.	Problem is solved.
Step 23 Perform a print test. Does the problem remain?	Contact next level of support.	Problem solved.

Sensor (input) static jam service check

Action	Yes	No
Step 1 Remove any prestaged or jammed media. Does the problem remain?	Go to step 2.	Problem is solved.
Step 2 Check the sensor (input) for proper operation. **a** Enter the diagnostic mode. **b** Select Base sensor test. **c** Observe the line item “input.” Does the display on the operator panel change every time the sensing area of the above sensor is interrupted or blocked?	Go to step 4.	Go to step 3.
Step 3 Check the above sensor for proper connection. If necessary, replace the connection or the sensor. See **“Sensor (input) removal ” on page 334**. Does the problem remain?	Go to step 4.	Problem is solved.
Step 4 Perform a print test. Does the problem remain?	Contact next level of support.	Problem is solved.

Printhead laser start failure service check

Action	Yes	No
Step 1 Remove all media present in the media path. Does the problem remain?	Go to step 2.	The problem is solved.
Step 2 Connect the cables on the printhead properly. Does the problem remain?	Go to step 3.	The problem is solved.
Step 3 Connect the cables on the system card. Does the problem remain?	Go to step 4.	The problem is solved.

Action	Yes	No
Step 4 Replace the printhead. Go to **"Printhead assembly removal" on page 377**. Does the problem remain?	Go to step 5.	The problem is solved.
Step 5 Replace the system card. Go to **"System card assembly removal" on page 321**. Does the problem remain?	Contact the next level of support.	The problem is solved.

Sensor (narrow media) late jam service check

Action	Yes	No
Step 1 Check the fuser wiper cover assembly for missing parts or damage, such as cracks. If necessary, replace the fuser wiper cover assembly. See **"Fuser wiper cover assembly removal" on page 375**. Does the problem remain?	Go to step 2.	The problem is solved.
Step 2 Replace the media in all trays or change the media size setup. Does the problem remain?	Go to step 3.	The problem is solved.
Step 3 Remove and properly reinstall the media in all trays. Does the problem remain?	Go to step 4.	The problem is solved.
Step 4 Check the fuser unit assembly for damage and life expiration. If necessary, replace the fuser unit assembly. Go to **"Fuser unit assembly removal" on page 373**. Does the problem remain?	Go to step 5.	The problem is solved.
Step 5 Remove obstructions in the fuser unit assembly. Does the problem remain?	Go to step 6.	The problem is solved.
Step 6 Remove any pre-staged or jammed media. Does the problem remain?	Go to step 7.	The problem is solved.

Action	Yes	No
Step 7 Check if the display on the operator panel changes every time the sensing area of the sensor (narrow media) is interrupted or blocked? **a** Enter the Diagnostic mode. **b** Select **Base sensor tests**. **c** Observe the line item, “input.” If necessary, replace the sensor. Does the problem remain?	Go to step 8.	The problem is solved.
Step 8 Check the above sensor for proper connection, and if necessary, replace the connection. Does the problem remain?	Go to step 9.	The problem is solved.
Step 9 Remove obstructions in the aligner assembly. Does the problem remain?	Go to step 10.	The problem is solved.
Step 10 Check the transfer roll assembly for damage, and if necessary, replace the transfer roll assembly. Go to **“Transfer roll assembly removal” on page 351**. Does the problem remain?	Go to step 11.	The problem is solved.
Step 11 Perform a print test and check if the media is transported and able to reach the sensor (fuser output). If necessary, replace the main drive motor assembly. Go to **“Main drive motor assembly removal” on page 312**. Does the problem remain?	Go to step 12.	The problem is solved.
Step 12 Perform a print test. Does the problem remain?	Contact next level of support.	The problem is solved.

Main drive motor assembly load error service check

Action	Yes	No
Step 1 Check the fuser wiper cover assembly for missing parts or damage, such as cracks. If necessary, replace the fuser wiper cover assembly. See **"Fuser wiper cover assembly removal" on page 375**. Does the problem remain?	Go to step 2.	Problem is solved.
Step 2 Remove all media present in the media path. Does the problem remain?	Go to step 3.	Problem is solved.
Step 3 Connect the cables on the main drive motor assembly. Does the problem remain?	Go to step 4.	Problem is solved.
Step 4 Connect the cables on the system card. Does the problem remain?	Go to step 5.	Problem is solved.
Step 5 Replace the main drive motor assembly. See **"Main drive motor assembly removal" on page 312**. Does the problem remain?	Go to step 6.	Problem is solved.
Step 6 Replace the system card. Go to **"System card assembly removal" on page 321**. Does the problem remain?	Contact next level of support.	Problem is solved.

Operator panel door assembly switch failure service check

Action	Yes	No
Step 1 Check the fuser wiper cover assembly for missing parts or damage, such as cracks. If necessary, replace the fuser wiper cover assembly. See **"Fuser wiper cover assembly removal" on page 375**. Does the problem remain?	Go to step 2.	The problem is solved.
Step 2 Remove all media present in the media path. Does the problem remain?	Go to step 3.	The problem is solved.
Step 3 Close the operator panel assembly door. Does the problem remain?	Go to step 4.	The problem is solved.
Step 4 Check the operator panel assembly door for damage. If necessary, replace the operator panel assembly door. Go to **"Operator panel door assembly removal (models X651, X652, X654,X656)" on page 345**. Does the problem remain?	Go to step 5.	The problem is solved.
Step 5 Check the interlock switch (left operator panel hinge) for damage. If necessary, replace the interlock switch. Does the problem remain?	Go to step 6.	The problem is solved.
Step 6 Connect all the cables on the system card properly. Does the problem remain?	Contact the next level of support.	The problem is solved.

Sensor (toner empty) service check

Action	Yes	No
Step 1 Inspect the print cartridge pulse wheel for damage, and if necessary, replace the print cartridge pulse wheel. Does the problem remain?	Go to step 2.	Problem is solved.
Step 2 Reinstall the sensor (toner empty) properly. Does the problem remain?	Go to step 3.	Problem is solved.
Step 3 Check the sensor (toner empty) for proper operation. **a** Enter the diagnostic mode. **b** Select Base sensor test. **c** Observe the line item "toner." Does the display on the operator panel, change every time the sensing area of the above sensor is interrupted or blocked?	Problem is solved.	Go to step 4.
Step 4 Check the above sensor for proper connection. If necessary, replace the connection or sensor. See **"Sensor (toner empty) removal" on page 333**. Does the problem remain?	Contact next level of support.	Problem is solved.

Sensor (fuser output) service check

Action	Yes	No
Step 1 Check the fuser wiper cover assembly for missing parts or damage, such as cracks. If necessary, replace the fuser wiper cover assembly. See **"Fuser wiper cover assembly removal" on page 375**. Does the problem remain?	Go to step 2.	Problem is solved.
Step 2 Check the sensor (fuser output) for damage. If necessary, replace the fuser unit assembly. See **"Fuser unit assembly removal" on page 373**. Does the problem remain?	Go to step 3.	Problem is solved.

Action	Yes	No
Step 3 **a** Enter the diagnostic mode. **b** Select Base sensor test. **c** Observe the line item “exit.” Does the display on the operator panel change every time the sensing area of the above sensor is interrupted or blocked?	Problem is solved.	Go to step 4.
Step 4 Check the above sensor for proper connection, and if necessary, replace the connection. Does the problem remain?	Contact next level of support.	Problem is solved.

Sensor (fuser output) late jam service check

Action	Yes	No
Step 1 Check the fuser wiper cover assembly for missing parts or damage, such as cracks. If necessary, replace the fuser wiper cover assembly. See **“Fuser wiper cover assembly removal” on page 375**. Does the problem remain?	Go to step 2.	Problem is solved.
Step 2 Replace the media, or change the media size setup in all the trays. Does the problem remain?	Go to step 3.	The problem is solved.
Step 3 Remove and properly reinstall the media. Does the problem remain?	Go to step 4.	The problem is solved.
Step 4 Check the fuser unit assembly for damage and life expiration. If necessary, replace the fuser unit assembly. Go to **“Fuser unit assembly removal” on page 373**. Does the problem remain?	Go to step 5.	The problem is solved.
Step 5 Remove obstructions in the fuser unit assembly. Does the problem remain?	Go to step 6.	The problem is solved.

Action	Yes	No
Step 6 Check the sensor (fuser output) for proper operation. **a** Enter the Diagnostic mode **b** Select **Base sensor test**. **c** Observe the line item, “output.” Does the display on the operator panel change every time the sensing area of the above sensor is interrupted or blocked?	Go to step 7.	
Step 7 Check the above sensor for proper connection, and if necessary, replace the connection. Does the problem remain?	Go to step 8.	The problem is solved.
Step 8 Remove obstructions in the aligner assembly. Does the problem remain?	Go to step 9.	The problem is solved.
Step 9 Check the transfer roll assembly for damage, and if necessary, replace the transfer roll assembly. Go to **“Transfer roll assembly removal” on page 351**.. Does the problem remain?	Go to step 10.	The problem is solved.
Step 10 Perform a print test and check the main motor assembly. If necessary, replace the main drive motor assembly. Go to **“Main drive motor assembly removal” on page 312**. Does the problem remain?	Go to step 11.	The problem is solved.
Step 11 Perform a print test. Does the problem remain?	Go to step 12.	The problem is solved.
Step 12 Install a type 2 fuser. Does the problem remain?	Contact the next level of support.	The problem is solved.

Printhead write failure service check

Action	Yes	No
Step 1 Check the fuser wiper cover assembly for missing parts or damage, such as cracks. If necessary, replace the fuser wiper cover assembly. See **"Fuser wiper cover assembly removal" on page 375**. Does the problem remain?	Go to step 2.	The problem is solved.
Step 2 Connect the cables on the printhead properly. Does the problem remain?	Go to step 3.	The problem is solved.
Step 3 Connect the cables on the system card properly. Does the problem remain?	Go to step 4.	The problem is solved.
Step 4 Replace the printhead. Go to **"Printhead assembly removal" on page 377**. Does the problem remain?	Go to step 5.	The problem is solved.
Step 5 Replace the system card. Go to **"System card assembly removal" on page 321**. Does the problem remain?	Contact the next level of support.	The problem is solved.

202-203 paper jams

202 paper jam

Touch **Status/Supplies** to identify the location of the jam. If the paper is exiting the printer, then pull the paper out, and then touch **Continue**.

If the paper is not exiting the printer:

1 Pull down the top rear door.

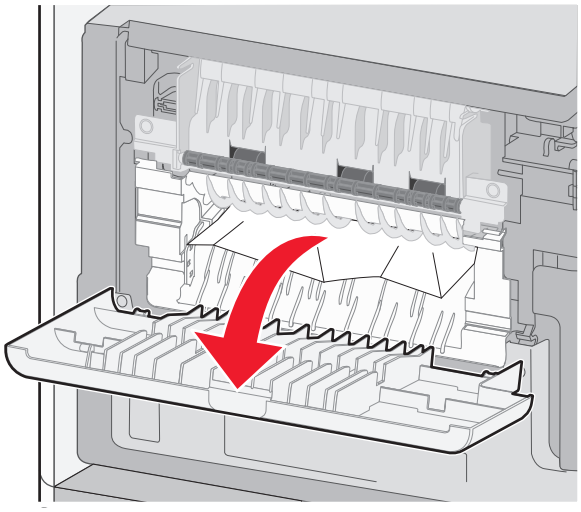

2 Remove the jammed paper.

3 Close the top rear door.

4 Touch **Continue**.

202 error messages

Error code	Description	Action
202.00	Paper jam around fuser exit or redrive area (type 1 fuser) Page may be jammed in fuser exit or redrive area.	Go to **"Paper jam around fuser exit or redrive area service check" on page 92**
202.01	Sensor (fuser output) lingering jam (type 1 fuser and destination is standard bin) Media reached the sensor (fuser output), but did not clear it in the specified time, and did not reach the sensor (narrow media).	Go to **"Sensor (fuser output) lingering jam service check" on page 94**
202.02	Sensor (fuser output) lingering jam (type 1 fuser) Media reached the sensor (fuser output), but did not clear it in the specified time	
202.03	Sensor (narrow media) static jam (type 1 fuser) Media remains on the sensor (narrow media) during the warm-up sequence.	Go to **"Sensor (narrow media) static jam service check" on page 96**
202.04	Sensor (fuser output) bounce (type 1 fuser) The sensor (fuser output) rebounded once the trailing edge of the media passed.	Go to **"Sensor (fuser output) service check" on page 82**
202.06	Sensor (fuser output) static jam (type 1 fuser) Media remains on the sensor (fuser output) during the warm-up sequence.	Go to **"Sensor (fuser output) static jam service check" on page 95**

Error code	Description	Action
202.07	Sensor (fuser output) lingering jam (type 1 fuser) Media reached the sensor (fuser output), but did not clear it in the specified time	Go to **"Sensor (fuser output) lingering jam service check" on page 94**
202.09	Sensor (fuser output) lingering jam (type 1 fuser) Media reached the sensor (fuser output), but did not clear it in the specified time	
202.10	Sensor (fuser output) lingering jam (type 1 fuser and destination is output option) Media reached the sensor (fuser output), but did not clear it in the specified time, and did not reach the sensor (narrow media).	
202.11	Sensor (fuser output) lingering jam (type 1 fuser and destination is standard bin) Media reached the sensor (fuser output), but did not clear it in the specified time, and also reached the sensor (narrow media).	
202.12	Sensor (fuser output) lingering jam (type 1 fuser and destination is output option) Media reached the sensor (fuser output), but did not clear it in the specified time, and also reached the sensor (narrow media).	
202.13	Sensor (fuser output) static jam and sensor (narrow media) static jam (type 1 fuser) Media remains on the sensor (fuser output) and the sensor (narrow media) during the warm-up sequence.	Go to **"Paper jam around fuser exit or redrive area service check" on page 92**
202.25	Paper jam around fuser exit or redrive area (type 2 fuser) Page may be jammed in fuser exit or redrive area.	
202.26	Sensor (fuser output) lingering jam (type 2 fuser and destination is standard bin) Media reached the sensor (fuser output), but did not clear it in the specified time, and did not reach the sensor (narrow media).	Go to **"Sensor (fuser output) lingering jam service check" on page 94**
202.27	Sensor (fuser output) lingering jam (type 2 fuser) Media reached the sensor (fuser output), but did not clear it in the specified time.	
202.28	Sensor (narrow media) static jam (type 2 fuser) Media remains on the sensor (narrow media) during the warm-up sequence.	Go to **"Sensor (narrow media) static jam service check" on page 96**
202.29	Sensor (fuser output) bounce (type 2 fuser) The sensor (fuser output) rebounded once the trailing edge of the media passed.	Go to **"Sensor (fuser output) service check" on page 82**

Error code	Description	Action
202.31	Sensor (fuser output) static jam (type 2 fuser) Media remains on the sensor (fuser output) during the warm-up sequence.	Go to **"Sensor (fuser output) static jam service check" on page 95**
202.32	Sensor (fuser output) lingering jam (type 2 fuser) Media reached the sensor (fuser output), but did not clear it in the specified time.	Go to **"Sensor (fuser output) lingering jam service check" on page 94**
202.34	Sensor (fuser output) lingering jam (type 2 fuser) Media reached the sensor (fuser output), but did not clear it in the specified time.	
202.35	Sensor (fuser output) lingering jam (type 2 fuser and destination is output option) Media reached the sensor (fuser output), but did not clear it in the specified time, and did not reach the sensor (narrow media).	
202.36	Sensor (fuser output) lingering jam (type 2 fuser and destination is standard bin) Media reached the sensor (fuser output), but did not clear it in the specified time, and also reached the sensor (narrow media).	
202.37	Sensor (fuser output) lingering jam (type 2 fuser and destination is output option) Media reached the sensor (fuser output), but did not clear it in the specified time, and also reached the sensor (narrow media).	
202.38	Sensor (fuser output) static jam and sensor (narrow media) static jam (type 2 fuser) Media remains on the sensor (fuser output) and the sensor (narrow media) during the warm-up sequence.	Go to **"Paper jam around fuser exit or redrive area service check" on page 92**
202.50	Paper jam around fuser exit or redrive area (type 1 fuser and fuser page count exceeded life) Page may be jammed in fuser exit or redrive area.	
202.51	Sensor (fuser output) lingering jam (type 1 fuser, destination is standard bin, and fuser page count exceeded life) Media reached the sensor (fuser output), but did not clear it in the specified time.	Go to **"Sensor (fuser output) lingering jam service check" on page 94**
202.52	Sensor (fuser output) lingering jam (type 1 fuser, destination is standard bin, and fuser page count exceeded life) Media reached the sensor (fuser output), but did not clear it in the specified time.	

Error code	Description	Action
202.53	Sensor (narrow media) static jam (type 1 fuser and fuser page count exceeded life) Media remains on the sensor (narrow media) during the warm-up sequence.	Go to **"Sensor (narrow media) static jam service check" on page 96**
202.54	Sensor (fuser output) bounce (type 1 fuser and fuser page count exceeded life) The sensor (fuser output) rebounded once the trailing edge of the media passed.	Go to **"Sensor (fuser output) service check" on page 82**
202.56	Sensor (fuser output) static jam (type 1 fuser and fuser page count exceeded life) Media remains on the sensor (fuser output) during the warm-up sequence.	Go to **"Sensor (fuser output) static jam service check" on page 95**
202.57	Sensor (fuser output) lingering jam (type 1 fuser and fuser page count exceeded life) Media reached the sensor (fuser output), but did not clear it in the specified time.	Go to **"Sensor (fuser output) lingering jam service check" on page 94**
202.59	Sensor (fuser output) lingering jam (type 1 fuser and fuser page count exceeded life) Media reached the sensor (fuser output), but did not clear it in the specified time.	
202.60	Sensor (fuser output) lingering jam (type 1 fuser, destination is output option, and fuser page count exceeded life) Media reached the sensor (fuser output), but did not clear it in the specified time, and did not reach the sensor (narrow media).	
202.61	Sensor (fuser output) lingering jam (type 1 fuser, destination is standard bin, and fuser page count exceeded life) Media reached the sensor (fuser output), but did not clear it in the specified time, and also reached the sensor (narrow media).	
202.62	Sensor (fuser output) lingering jam (type 1 fuser, destination is output option, and fuser page count exceeded life) Media reached the sensor (fuser output), but did not clear it in the specified time, and also reached the sensor (narrow media).	

Error code	Description	Action
202.63	Sensor (fuser output) static jam and sensor (narrow media) static jam (type 1 fuser and fuser page count exceeded life) Media remains on the sensor (fuser output) and the sensor (narrow media) during the warm-up sequence.	Go to **"Paper jam around fuser exit or redrive area service check" on page 92**
202.75	Paper jam around fuser exit or redrive area (type 2 fuser and fuser page count exceeded life) Page may be jammed in fuser exit or redrive area.	
202.76	Sensor (fuser output) lingering jam (type 2 fuser, destination is standard bin, and fuser page count exceeded life) Media reached the sensor (fuser output), but did not clear it in the specified time, and did not reach the sensor (narrow media).	Go to **"Sensor (fuser output) lingering jam service check" on page 94**
202.77	Sensor (fuser output) lingering jam (type 2 fuser and fuser page count exceeded life) Media reached the sensor (fuser output), but did not clear it in the specified time.	
202.78	Sensor (narrow media) static jam (type 2 fuser and fuser page count exceeded life) Media remains on the sensor (fuser output) and the sensor (narrow media) during the warm-up sequence.	Go to **"Paper jam around fuser exit or redrive area service check" on page 92**
202.79	Sensor (fuser output) bounce (type 2 fuser and fuser page count exceeded life) The sensor (fuser output) rebounded once the trailing edge of the media passed.	Go to **"Sensor (fuser output) service check" on page 82**
202.81	Sensor (fuser output) static jam (type 2 fuser and fuser page count exceeded life) Media remains on the sensor (fuser output) during the warm-up sequence.	Go to **"Sensor (fuser output) static jam service check" on page 95**

Error code	Description	Action
202.82	Sensor (fuser output) lingering jam (type 2 fuser and fuser page count exceeded life) Media reached the sensor (fuser output), but did not clear it in the specified time.	Go to **“Sensor (fuser output) lingering jam service check” on page 94**
202.84	Sensor (fuser output) lingering jam (type 2 fuser and fuser page count exceeded life) Media reached the sensor (fuser output), but did not clear it in the specified time.	
202.85	Sensor (fuser output) lingering jam (type 2 fuser, destination is output option, and fuser page count exceeded life) Media reached the sensor (fuser output), but did not clear it in the specified time, and did not reach the sensor (narrow media).	
202.86	Sensor (fuser output) lingering jam (type 2 fuser, destination is standard bin, and fuser page count exceeded life) Media reached the sensor (fuser output), but did not clear it in the specified time, and also reached the sensor (narrow media).	
202.87	Sensor (fuser output) lingering jam (type 2 fuser, destination is output option, and fuser page count exceeded life) Media reached the sensor (fuser output), but did not clear it in the specified time, and also reached the sensor (narrow media).	
202.88	Sensor (fuser output) static jam and sensor (narrow media) static jam (type 2 fuser and fuser page count exceeded life) Media remains on the sensor (fuser output) and the sensor (narrow media) during the warm-up sequence.	Go to **“Paper jam around fuser exit or redrive area service check” on page 92**
202.99	Fuser ID chip failure The system does not recognize the ID chip on the fuser unit.	Go to **“Fuser unit assembly removal” on page 373**

203 error messages

Error code	Description	Action
203.00	Paper jam around redrive area Page may be jammed in redrive area.	Go to **"Paper jam around fuser exit or redrive area service check" on page 92**.
203.01	Internal duplex drive motor control failure (internal duplex) The internal duplex drive motor motor does not reach the proper operating speed at the specified time.	Go to **"Internal duplex drive motor control failure service check" on page 97**.
203.08	Redrive motor load error The redrive motor assembly has failed or caused high mechanical load during the warm up sequence.	Go to **"Redrive motor load error service check" on page 97**.
203.10	Redrive motor control failure (media tray 1) The redrive motor does not reach the proper operating speed at the specified time.	
203.18	Redrive motor assembly underspeed error The redrive motor assembly does not rotate at the specified speed.	
203.20	Redrive motor lost encoder failure The redrive motor is not reporting pulses back to the engine.	

Paper jam around fuser exit or redrive area service check

Action	Yes	No
Step 1 Check the fuser wiper cover assembly for missing parts or damage, such as cracks. If necessary, replace the fuser wiper cover assembly. See **"Fuser wiper cover assembly removal" on page 375**. Does the problem remain?	Go to step 2.	Problem is solved.
Step 2 Install media properly. Does the problem remain?	Go to step 3.	Problem is solved.
Step 3 Remove obstructions in media path. Does the problem remain?	Go to step 4.	Problem is solved.

Action	Yes	No
Step 4 Check the sensor (fuser output) for damage. If necessary, replace the fuser unit assembly. See **“Fuser unit assembly removal” on page 373**. Does the problem remain?	Go to step 5.	Problem is solved.
Step 5 **a** Enter the diagnostic mode. **b** Select Base sensor test. **c** Observe the line item “exit.” Does the display on the operator panel change every time the sensing area of the above sensor is interrupted or blocked?	Go to step 6	Go to step 6.
Step 6 Check the above sensor for proper connection, and replace if necessary. Does the problem remain?	Go to step 7.	Problem is solved.
Step 7 Perform a print test. Does the problem remain?	Go to step 8.	Problem is solved.
Step 8 Check the sensor (narrow media) for damage. If necessary, replace the fuser unit assembly. See **“Fuser unit assembly removal” on page 373**. Does the problem remain?	Go to step 9.	Problem is solved.
Step 9 **a** Enter the diagnostic mode. **b** Select Base sensor test. **c** Observe the line item “narrow media.” Does the display on the operator panel change every time the sensing area of the above sensor is interrupted or blocked?	Go to step 10.	Go to step 10.
Step 10 Check the above sensor for proper connection, and replace if necessary. Does the problem remain?	Go to step 9.	Problem is solved.
Step 11 Perform a print test. Does the problem remain?	Contact next level of support.	Problem is solved.

Sensor (fuser output) lingering jam service check

Action	Yes	No
Step 1 Check the fuser wiper cover assembly for missing parts or damage, such as cracks. If necessary, replace the fuser wiper cover assembly. See **"Fuser wiper cover assembly removal" on page 375**. Does the problem remain?	Go to step 2.	The problem is solved.
Step 2 Check the media size setup and tray guides for all media trays. If necessary, replace the media, or change the media size setup. Does the problem remain?	Go to step 3.	The problem is solved.
Step 3 Remove and properly reinstall the media in all the trays. Does the problem remain?	Go to step 4.	The problem is solved.
Step 4 Open, then properly close the door assembly, rear. Does the problem remain?	Go to step 5.	The problem is solved.
Step 5 Check the fuser unit assembly for damage and life expiration. If necessary, replace the fuser unit assembly. See **"Fuser unit assembly removal" on page 373**. Does the problem remain?	Go to step 6.	The problem is solved.
Step 6 Check the sensor (fuser output) for proper operation. **a** Enter the Diagnostic mode. **b** Select **Base sensor tests**. **c** Observe the line item, "output." Does the display on the operator panel change every time the sensing area of the above sensor is interrupted or blocked?	Go to step 8.	Go to step 7.
Step 7 Check the above sensor for proper connection. If necessary, replace the connection. Does the problem remain?	Go to step 8.	The problem is solved.

Action	Yes	No
Step 8 Check the redrive assembly for damage. If necessary, replace the redrive assembly. Go to **"Redrive assembly removal" on page 374**. Does the problem remain?	Go to step 9.	The problem is solved.
Step 9 Perform a print test and check the redrive motor assembly for proper operation. If necessary, replace the redrive motor assembly. Go to **"Redrive motor assembly removal" on page 379**. Does the above component operate properly?	Go to step 10.	The problem is solved.
Step 10 Perform a print test. Does the problem remain?	Contact the next level of support.	The problem is solved.

Sensor (fuser output) static jam service check

Action	Yes	No
Step 1 Check the fuser wiper cover assembly for missing parts or damage, such as cracks. If necessary, replace the fuser wiper cover assembly. See **"Fuser wiper cover assembly removal" on page 375**. Does the problem remain?	Go to step 2.	Problem is solved.
Step 2 Remove any prestaged or jammed media. Does the problem remain?	Go to step 3.	Problem is solved.
Step 3 Check the sensor (fuser output) for proper operation. **a** Enter the diagnostic mode. **b** Select Base sensor tests. **c** Observe the line item "input." Does the display on the operator panel change every time the sensing area of the above sensor is interrupted or blocked?	Go to step 4.	Go to step 4.
Step 4 Check the above sensor for proper connection, and if necessary, replace the connection. Does the problem remain?	Replace the fuser unit assembly. See **"Fuser unit assembly removal" on page 373**.	Problem is solved.

Action	Yes	No
Step 5 Perform a print test. Does the problem remain?	Contact next level of support.	Problem is solved.

Sensor (narrow media) static jam service check

Action	Yes	No
Step 1 Check the fuser wiper cover assembly for missing parts or damage, such as cracks. If necessary, replace the fuser wiper cover assembly. See **"Fuser wiper cover assembly removal" on page 375**. Does the problem remain?	Go to step 2.	Problem is solved.
Step 2 Remove any prestaged or jammed media. Does the problem remain?	Go to step 3.	Problem is solved.
Step 3 Check the sensor (fuser output) for proper operation. **a** Enter the diagnostic mode. **b** Select Base sensor tests. **c** Observe the line item "input." Does the display on the operator panel change every time the sensing area of the above sensor is interrupted or blocked?	Go to step 4.	Go to step 4.
Step 4 Check the above sensor for proper connection, and if necessary, replace the connection. Does the problem remain?	Replace the fuser unit assembly. See **"Fuser unit assembly removal" on page 373**.	Problem is solved.
Step 5 Perform a print test. Does the problem remain?	Contact next level of support.	Problem is solved.

Internal duplex drive motor control failure service check

Action	Yes	No
Step 1 Remove all media present in media path. Does the problem remain?	Go to step 2.	The problem is solved.
Step 2 Check all connections on the duplex media entrance drive motor assembly, and if necessary, replace the connections. Does the problem remain?	Go to step 3.	The problem is solved.
Step 3 Check all connections on the system card assembly, and if necessary, replace the connections. Does the problem remain?	Go to step 4.	The problem is solved.
Step 4 Replace the duplex media entrance drive motor assembly if problem remains. Go to **"Duplex drive motor assembly removal" on page 370**. Does the problem remain?	Contact next level of tech support.	The problem is solved.

Redrive motor load error service check

Action	Yes	No
Step 1 Remove all media present in media path. Does the problem remain?	Go to step 2.	Problem is solved.
Step 2 Check if the upper redrive assembly is properly installed. If necessary, reinstall the upper redrive assembly. Does the problem remain?	Go to step 3.	Problem is solved.
Step 3 Check all connections on the redrive motor assembly, and if necessary, replace the connections. Does the problem remain?	Go to step 4.	Problem is solved.

Action	Yes	No
Step 4 Check all connections on the system card assembly, and if necessary, replace the connections. Does the problem remain?	Go to step 4.	Problem is solved.
Step 5 Replace the redrive motor assembly if problem remains. See **"Redrive assembly removal" on page 374**. Does the problem remain?	Contact next level of support.	Problem is solved.

230 paper jams

230–239 paper jams

1 Touch **Status/Supplies** to identify the location of the jam.

2 Pull the standard tray out.

3 Pull down the bottom rear door.

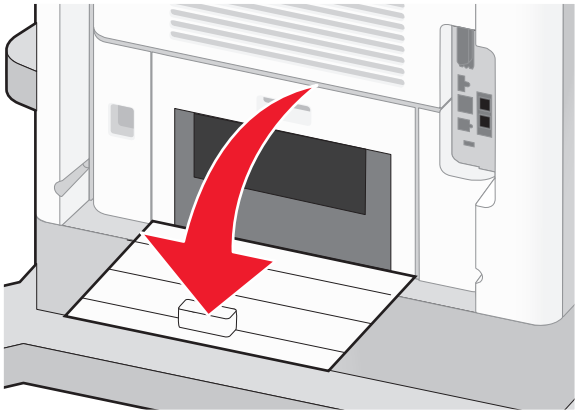

4 Push the tab down.

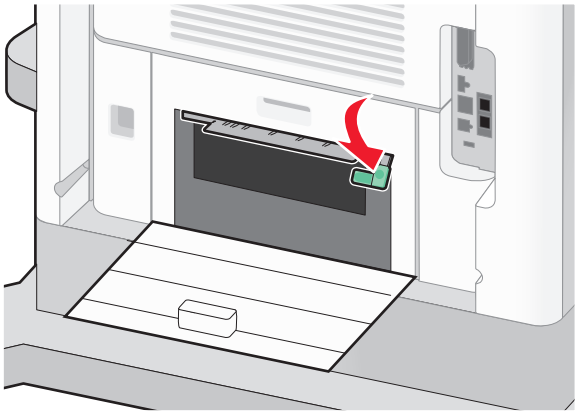

5 Remove the jammed paper.

6 Close the bottom rear door.

7 Insert the standard tray.

8 Touch **Continue**.

230 error messages

Error code	Description	Action
230.00	Paper jam around internal duplex (internal duplex) Page may be jammed in internal duplex area.	Go to **"Paper jam around internal duplex service check" on page 100**.
230.01	Sensor (duplex input) lingering jam (internal duplex) Media reached the sensor (duplex input) but did not clear it in the specified time.	Go to **"Sensor (pass through) late jam service check" on page 101**.
230.02	Sensor (duplex input) late jam (internal duplex) Media is late reaching the sensor (duplex input) within the specified time.	Go to **"Sensor (duplex input) late jam service check" on page 103**.
230.03	Sensor (duplex input) bounce (internal duplex) The sensor (duplex input) rebounded once the trailing edge of the media passed.	Go to **"Sensor (duplex input) service check" on page 105**.
230.04	Sensor (input) late jam from duplex (internal duplex) Media is late reaching the sensor (input) within the specified time during the second side printing using the internal duplex.	Go to **"Sensor (input) late jam service check" on page 73**.
230.05	Sensor (duplex input) lingering jam (internal duplex) Media reached the sensor (duplex input) but did not clear it in the specified time.	Go to **"Sensor (pass through) late jam service check" on page 101**.
230.06	Sensor (input) late jam from duplex (internal duplex) Media is late reaching the sensor (input) within the specified time during the second side printing using the internal duplex.	Go to **"Sensor (input) late jam service check" on page 73**.
230.07	Sensor (input) late jam from duplex (internal duplex) Media is late reaching the sensor (input) within the specified time during the second side printing using the internal duplex.	
230.08	Internal duplex drive motor load error (internal duplex) The internal duplex drive motor assembly has failed or caused high mechanical load during warm-up sequence.	Go to **"Internal duplex drive motor load error service check" on page 105**.

Error code	Description	Action
230.10	Internal duplex drive motor control failure (internal duplex) The internal duplex drive motor does not reach the proper operating speed at the specified time.	Go to **"Internal duplex drive motor control failure service check" on page 97**.
230.13	Sensor (duplex input) static jam (internal duplex) Media remains on the sensor (duplex input) during the warm-up sequence.	Go to **"Sensor (duplex input) lingering jam service check" on page 106**.
230.14	Paper jam around internal duplex (internal duplex) Page may be jammed in internal duplex area.	Go to **"Paper jam around internal duplex service check" on page 100**.
230.18	Internal duplex drive motor assembly underspeed error (internal duplex) The internal duplex drive motor does not rotate at the specified speed.	Go to **"Internal duplex drive motor control failure service check" on page 97**.
230.20	Internal duplex drive motor lost encoder failure (internal duplex) The internal duplex drive motor is not reporting pulses back to the engine.	Go to **"Internal duplex drive motor load error service check" on page 105**.

Paper jam around internal duplex service check

Action	Yes	No
Step 1 Remove all media present in media path. Does the problem remain?	Go to step 2.	The problem is solved.
Step 2 Check for obstructions in media path. Does the problem remain?	Go to step 3.	The problem is solved.
Step 3 Check the sensor (fuser output) for damage. If necessary, replace the fuser unit assembly. Go to **"Fuser unit assembly removal" on page 373**. Does the problem remain?	Go to step 4.	The problem is solved.

Action	Yes	No
Step 4 Check if the display on the operator panel changes every time the sensing area of the above sensor is interrupted or blocked. **a** Enter the Diagnostic mode. **b** Select **Base sensor test**. **c** Observe the line item, “exit.” If necessary, replace the connection or the fuser unit assembly. Go to **“Fuser unit assembly removal” on page 373**. Does the problem remain?	Go to step 5.	The problem is solved.
Step 5 Check the sensor (duplex input) for damage, and if necessary, replace the sensor (duplex input). Go to **“Sensor (duplex input) removal” on page 382**. Does the problem remain?	Go to step 6.	The problem is solved.
Step 6 Check if the display on the operator panel changes every time the sensing area of the above sensor is interrupted or blocked. **a** Enter the Diagnostic mode. **b** Select **Duplex sensor test**. **c** Select **Sensor test**. **d** Observe the line item, “input.” If necessary, replace the connection, the external duplex unit assembly (external duplex only), or the duplex input sensor assembly (internal duplex only). Go to **“Duplex input sensor assembly removal” on page 356**. Does the problem remain?	Contact the next level of support.	The problem is solved.

Sensor (pass through) late jam service check

Action	Yes	No
Step 1 Replace the media, or change the media size setup in all the trays. Does the problem remain?	Go to step 2.	The problem is solved.
Step 2 Remove any excess media from the trays. Does the problem remain?	Go to step 3.	The problem is solved.

Action	Yes	No
Step 3 Replace the damaged media with new media. Does the problem remain?	Go to step 4.	The problem is solved.
Step 4 Remove obstructions in the media tray pass-thru areas. Does the problem remain?	Go to step 5.	The problem is solved.
Step 5 Check the two pick roll assemblies in the media tray being picked from. If necessary, clean or replace the pick roll assemblies. Go to **"Pick roll assembly removal" on page 362**. Does the problem remain?	Go to step 6.	The problem is solved.
Step 6 Check if the display on the operator panel changes every time the sensing area of the media tray sensor (pass through) is interrupted or blocked. **a** Enter the Diagnostic mode. **b** Select **Input tray tests**. **c** Select **Sensor test**. **d** Select the appropriate tray number. **e** Observe the line item, "pass through," for the appropriate media tray. If necessary, replace the connection or the sensor (pass-thru). Go to **"250-sheet tray controller card assembly removal" on page 407**. Does the problem remain?	Go to step 7.	The problem is solved.
Step 7 Perform a print test and check the pick arm assembly for the appropriate media tray if media is properly picked and advanced out of the tray. If necessary, replace the appropriate pick arm assembly. Go to **"Operator panel door assembly removal (models X651, X652, X654,X656)" on page 345**. Does the problem remain?	Go to step 8.	The problem is solved.
Step 8 Perform a print test and check the main motor assembly if media is properly transported through the pass-thru areas of the media trays. If necessary, replace the main drive motor assembly. Go to **"Main drive motor assembly removal" on page 312**. Does the problem remain?	Go to step 9.	The problem is solved.

Action	Yes	No
Step 9 Perform a print test using the appropriate input tray, and if necessary, replace the input option. Does the problem remain?	Contact the next level of support.	The problem is solved.

Sensor (duplex input) late jam service check

Action	Yes	No
Step 1 Open and then properly close the rear door assembly. Does the problem remain?	Go to step 2.	The problem is solved.
Step 2 Open and then properly close the fuser access door. Does the problem remain?	Go to step 3.	The problem is solved.
Step 3 Remove obstructions in the internal duplex media path. Does the problem remain?	Go to step 4.	The problem is solved.
Step 4 Check the redrive assembly for damage, and if necessary, replace the redrive assembly. Go to **"Redrive assembly removal" on page 374**. Does the problem remain?	Go to step 5.	The problem is solved.
Step 5 Perform a print test and check the redrive motor assembly for proper operation. If necessary, replace the redrive motor assembly. Go to **"Redrive assembly removal" on page 374**. Does the problem remain?	Go to step 6.	The problem is solved.
Step 6 Perform a print test and check the duplex drive motor assembly for proper operation. If necessary, replace the duplex drive motor assembly. Go to **"Duplex drive motor assembly removal" on page 370**. Does the problem remain?	Go to step 7.	The problem is solved.

Action	Yes	No
Step 7 Check if the display on the operator panel changes every time the sensing area of the media tray sensor (duplex input) is interrupted. **a** Enter the Diagnostic mode. **b** Select **Duplex tests**. **c** Select **Sensor test**. **d** Observe the line item, “input.” If necessary, replace the connection or the sensor (duplex input). Go to **“Sensor (duplex input) removal” on page 382**. Does the problem remain?	Go to step 8.	The problem is solved.
Step 8 Remove obstructions in the external duplex media path. Does the problem remain?	Go to step 9.	The problem is solved.
Step 9 Remove, and then properly reinstall the external duplex unit assembly. Does the problem remain?	Go to step 10.	The problem is solved.
Step 10 Check if the display on the operator panel changes every time the sensing area of the media tray sensor (duplex input) is interrupted. **a** Enter the Diagnostic mode. **b** Select **Duplex tests**. **c** Select **Sensor test**. **d** Observe the line item, “input.” If necessary, replace the connection or the external duplex assembly. Does the problem remain?	Go to step 11.	The problem is solved.
Step 11 Perform a print test using the duplex. Does the problem remain?	Contact the next level of support.	The problem is solved.

Sensor (duplex input) service check

Action	Yes	No
Step 1 Check the sensor (duplex input) for damage, and if necessary, replace the sensor (duplex input). Go to **"Sensor (duplex input) removal" on page 382**.	Go to step 2.	The problem is solved.
Step 2 Check if the display on the operator panel changes every time the sensing area of the media tray sensor (duplex input) is interrupted or blocked. **a** Enter the Diagnostic mode. **b** Select **Duplex sensor tests**. **c** Select **Sensor test**. **d** Observe the line item, "input." If necessary, replace the connection, the external duplex unit assembly (external duplex only), or the duplex input sensor assembly (internal duplex only). Go to **"Duplex input sensor assembly removal" on page 356**. Does the problem remain?	Contact the next level of support.	The problem is solved.

Internal duplex drive motor load error service check

Action	Yes	No
Step 1 Remove all media present in media path. Does the problem remain?	Go to step 2.	The problem is solved.
Step 2 Check all cable connections on the duplex media entrance drive motor assembly. If necessary, reconnect the cables. Does the problem remain?	Go to step 3.	The problem is solved.
Step 3 Check all cable connections on the system card assembly. If necessary, replace the duplex drive motor assembly. Go to **"Duplex drive motor assembly removal" on page 370**. Does the problem remain?	Contact the next level of support.	The problem is solved.

Sensor (duplex input) lingering jam service check

Action	Yes	No
Step 1 Remove obstructions in the internal duplex media path. Does the problem remain?	Go to step 2.	The problem is solved.
Step 2 Check the front duplex guide assembly for damage, and if necessary, replace the front duplex guide assembly. Go to **"Front duplex guide assembly removal" on page 357**. Does the problem remain?	Go to step 3.	The problem is solved.
Step 3 Check if the display on the operator panel changes every time the sensing area of the media tray sensor (duplex input) is interrupted or blocked. **a** Enter the Diagnostic mode. **b** Select **Duplex tests**. **c** Select **Sensor test**. **d** Observe the line item, "input." If necessary, replace the connection or the sensor (duplex input). Go to **"Sensor (duplex input) removal" on page 382**. Does the problem remain?	Go to step 4.	The problem is solved.
Step 4 Remove obstructions in the aligner assembly. Does the problem remain?	Go to step 5.	The problem is solved.
Step 5 Remove obstructions in the external duplex media path. Does the problem remain?	Go to step 6.	The problem is solved.
Step 6 Remove, then properly reinstall the external duplex unit assembly. Does the problem remain?	Go to step 7.	The problem is solved.

Action	Yes	No
Step 7 Check if the display on the operator panel changes every time the sensing area of the media tray sensor (duplex input) is interrupted or blocked. **a** Enter the Diagnostic mode. **b** Select **Duplex tests**. **c** Select **Sensor test**. **d** Observe the line item, “input.” If necessary, replace the connection or the external duplex assembly. Does the problem remain?	Go to step 8.	The problem is solved.
Step 8 Perform a print test using the duplex. Does the problem remain?	Contact the next level of support.	The problem is solved.

231-239 paper jams

231-237 error messages

Error code	Description	Action
231.00	Sensor (duplex input) late jam (external duplex) Media is late reaching the sensor (duplex input) within the specified time.	Go to **“Sensor (duplex input) late jam service check” on page 103**.
232.00	Sensor (duplex input) lingering jam (external duplex) Media reached the sensor (duplex input) but did not clear it in the specified time.	Go to **“Sensor (pass through) late jam service check” on page 101**.
233.00	Sensor (duplex double-feed) late jam (external duplex) Media is late reaching the sensor (duplex double-feed) within the specified time.	Go to **“Sensor (duplex double-feed) late jam service check” on page 110**.
234.00	Sensor (duplex exit) late jam (external duplex) Media is late reaching the sensor (duplex exit) within the specified time.	Go to **“Sensor (duplex exit) late jam (external duplex only) service check” on page 110**.
235.00	Sensor (duplex double-feed) lingering jam (external duplex) Media reached the sensor (duplex double-feed) within the specified time but did not clear it within the specified time.	Go to **“Sensor (duplex double-feed) lingering jam service check” on page 112**.

Error code	Description	Action
236.00	Sensor (duplex input) lingering jam (internal duplex) Media reached the sensor (duplex exit) within the specified time but did not clear it within the specified time.	Go to **"Sensor (duplex exit) lingering jam service check" on page 112**.
237.00	Sensor (input) late jam from duplex (external duplex) Media is late reaching the sensor (input) within the specified time during the second side printing using the external duplex.	Go to **"Sensor (input) late jam service check" on page 73**.
237.07	Paper jam around external duplex (external duplex) Page may be jammed in external duplex area.	Go to **"Paper jam around external duplex service check" on page 113**.

238 error messages

Error code	Description	Action
238.00	External duplex sensor static jam (external duplex) Media remains on a sensor within the external duplex assembly during the warm-up sequence.	Go to **"External duplex sensor static jam service check (external duplex)" on page 114**.
238.01	Sensor (duplex input) static jam (external duplex) Media remains on the sensor (duplex input) during the warm-up sequence.	Go to **"Sensor (duplex input) lingering jam service check" on page 106**.
238.02	Sensor (duplex exit) static jam (external duplex) Media remains on the sensor (duplex exit) during the warm-up sequence.	Go to **"Sensor (duplex exit) static jam service check (external duplex)" on page 114**.
238.03	Sensor (duplex input) static jam and sensor (duplex exit) static jam (external duplex) Media remains on the sensor (duplex input) and the sensor (duplex exit) during the warm-up sequence.	Go to **"Sensor (duplex input) lingering jam service check" on page 106**.
238.04	Sensor (duplex double-feed) static jam (external duplex) Media remains on the sensor (duplex double-feed) during the warm-up sequence.	Go to **"External duplex sensor static jam service check (external duplex)" on page 114**.
238.05	Sensor (duplex input) static jam and sensor (double-feed) static jam (external duplex) Media remains on the sensor (duplex input) and the sensor (double-feed) during the warm-up sequence.	Go to **"Sensor (duplex input) lingering jam service check" on page 106**.

Error code	Description	Action
238.06	Sensor (duplex exit) static jam and sensor (double-feed) static jam (external duplex) Media remains on the sensor (duplex exit) and the sensor (double-feed) during the warm-up sequence.	Go to **"Sensor (duplex exit) static jam service check (external duplex)" on page 114**.
238.07	Sensor (duplex input) static jam, sensor (double-feed) static jam, and sensor (duplex exit) (external duplex) Media remains on the sensor (duplex input), sensor (double-feed), and the sensor (duplex exit) during the warm-up sequence.	Go to **"Sensor (duplex input) lingering jam service check" on page 106**.

239 error messages

Error code	Description	Action
239.00	Mechanical feed error or timing error (external duplex) Mechanical feed error or timing error.	Go to **"Mechanical feed error or timing error (external duplex) service check" on page 115**.
239.01	External duplex assembly error (external duplex) Mechanical feed error or timing error.	Go to **"External duplex assembly error (external duplex) service check" on page 116**.
239.02	External duplex assembly error (external duplex) Mechanical feed error or timing error.	
239.03	Device controls response error (external duplex) Mechanical feed error or timing error.	
239.04	Input device ready response error (external duplex) Mechanical feed error or timing error.	
239.05	Output device response error (external duplex) Mechanical feed error or timing error.	
239.06	Failed the last page of a staple job (external duplex) Mechanical feed error or timing error.	
239.07	Select output device error (external duplex) Mechanical feed error or timing error.	
239.08	Input source ready error (external duplex) Mechanical feed error or timing error.	
239.11	Sensor (input) late jam from duplex (external duplex) Media is late reaching the sensor (input) within the specified time during the second side printing using the external duplex.	Go to **"Sensor (input) late jam service check" on page 73**.

Sensor (duplex double-feed) late jam service check

Action	Yes	No
Step 1 Remove all media present in media path. Does the problem remain?	Go to step 2.	Problem is solved.
Step 2 Remove obstructions in the media path. Does the problem remain?	Go to step 3.	Problem is solved.
Step 3 Remove, and then properly reinstall the external duplex assembly. Does the problem remain?	Go to step 4.	Problem is solved.
Step 4 Open and then properly close the rear door of the external duplex. Does the problem remain?	Go to step 5.	Problem is solved.
Step 5 Check all cable connections on the external duplex assembly. If necessary, reconnect the cables. Does the problem remain?	Contact next level of support.	Problem is solved.

Sensor (duplex exit) late jam (external duplex only) service check

Action	Yes	No
Step 1 Remove all media present in media path. Does the problem remain?	Go to step 2.	Problem is solved.
Step 2 Properly reinstall media. Does the problem remain?	Go to step 3.	Problem is solved.
Step 3 Remove obstructions in the media path. Does the problem remain?	Go to step 4.	Problem is solved.
Step 4 Remove, and then properly reinstall the external duplex assembly. Does the problem remain?	Go to step 5.	Problem is solved.

Action	Yes	No
Step 5 Open and then properly close the rear door of the external duplex. Does the problem remain?	Go to step 6.	Problem is solved.
Step 6 Check sensor (duplex exit) for proper operation, and if necessary replace the sensor. See **“Sensor (duplex exit) service check (external duplex only)” on page 111**. Does the problem remain?	Go to step 7.	Problem is solved.
Step 7 Check all cable connections on the external duplex assembly. If necessary, reconnect the cables or replace the external duplex assembly. Does the problem remain?	Contact next level of support.	Problem is solved.

Sensor (duplex exit) service check (external duplex only)

Action	Yes	No
Step 1 Check the sensor (duplex exit) for damage, and if necessary, replace the external duplex unit assembly. Does the problem remain?	Go to step 2.	Problem is solved.
Step 2 Check if the display on the operator panel changes every time the sensing area of the media tray sensor (duplex exit) is interrupted or blocked. **a** Enter the diagnostic mode. **b** Select Duplex tests. **c** Select Sensor test. **d** Observe the line item “exit.” If necessary, replace the connection or the external duplex unit assembly. Does the problem remain?	Contact next level of support.	Problem is solved.

Sensor (duplex double-feed) lingering jam service check

Action	Yes	No
Step 1 Remove all media present in media path. Does the problem remain?	Go to step 2.	Problem is solved.
Step 2 Reinstall all media properly. Does the problem remain?	Go to step 3.	Problem is solved.
Step 3 Remove obstructions in the media path. Does the problem remain?	Go to step 4.	Problem is solved.
Step 4 Remove, and then properly reinstall the external duplex assembly. Does the problem remain?	Go to step 5.	Problem is solved.
Step 5 Check the external duplex assembly, and if necessary, replace the external duplex assembly. Does the problem remain?	Contact next level of support.	Problem is solved.

Sensor (duplex exit) lingering jam service check

Action	Yes	No
Step 1 Remove all media present in media path. Does the problem remain?	Go to step 2.	Problem is solved.
Step 2 Reinstall all media properly. Does the problem remain?	Go to step 3.	Problem is solved.
Step 3 Remove obstructions in the media path. Does the problem remain?	Go to step 4.	Problem is solved.
Step 4 Remove, and then properly reinstall the external duplex assembly. Does the problem remain?	Go to step 5.	Problem is solved.

Action	Yes	No
Step 5 Check sensor (duplex exit) for proper operation, and if necessary replace the sensor. See **“Sensor (duplex exit) service check (external duplex only)” on page 111**. Does the problem remain?	Go to step 6.	Problem is solved.
Step 6 Check the external duplex assembly, and if necessary, replace the external duplex assembly. Does the problem remain?	Contact next level of support.	Problem is solved.

Paper jam around external duplex service check

Action	Yes	No
Step 1 Remove all media present in media path. Does the problem remain?	Go to step 2.	Problem is solved.
Step 2 Properly reinstall media. Does the problem remain?	Go to step 3.	Problem is solved.
Step 3 Remove obstructions in the media path. Does the problem remain?	Go to step 4.	Problem is solved.
Step 4 Remove, and then properly reinstall the external duplex assembly. Does the problem remain?	Go to step 5.	Problem is solved.
Step 5 Open and then properly close the rear door of the external duplex. Does the problem remain?	Go to step 6.	Problem is solved.
Step 6 Open and then properly close the external duplex tray. Does the problem remain?	Go to step 7.	Problem is solved.
Step 7 Open and then properly close media tray 1. Does the problem remain?	Go to step 8.	Problem is solved.

Action	Yes	No
Step 8 Check the lower option drive (PTO) assembly for damage, and if necessary the lower option drive assembly. Does the problem remain?	Go to step 9.	Problem is solved.
Step 9 Check all cable connections on the external duplex assembly. If necessary, reconnect the cables or replace the external duplex assembly. Does the problem remain?	Contact next level of support.	Problem is solved.

External duplex sensor static jam service check (external duplex)

Action	Yes	No
Step 1 Remove all media present in the media path. Does the problem remain?	Go to step 2.	Problem is solved.
Step 2 Replace the external duplex assembly. Does the problem remain?	Contact next level of support.	Problem is solved.

Sensor (duplex exit) static jam service check (external duplex)

Action	Yes	No
Step 1 Remove all media present in the media path. Does the problem remain?	Go to step 2.	Problem is solved.
Step 2 Check if the display on the operator panel changes every time the sensing area of the sensor (duplex exit) is interrupted or blocked. **a** Enter the diagnostic mode. **b** Select Duplex sensor tests. **c** Select Sensor test. **d** Observe the line item “exit.” If necessary, replace the connection or replace the external duplex unit assembly. Does the problem remain?	Contact next level of support.	Problem is solved.

Mechanical feed error or timing error (external duplex) service check

Action	Yes	No
Step 1 Remove all media present in the media path. Does the problem remain?	Go to step 2.	The problem is solved.
Step 2 Check the sensor (duplex input) for damage, and if necessary, replace the sensor (duplex input). Go to **"Sensor (duplex input) removal" on page 382**. Does the problem remain?	Go to step 3.	The problem is solved.
Step 3 Check if the display on the operator panel changes every time the sensing area of the sensor (duplex input) is interrupted or blocked. **a** Enter the Diagnostic mode. **b** Select **Duplex sensor tests**. **c** Select **Sensor test**. **d** Observe the line item, "input." If necessary, replace the external duplex unit assembly (external duplex only) or the duplex input sensor assembly (internal duplex only). Go to **"Duplex input sensor assembly removal" on page 356**. Does the problem remain?	Go to step 4.	The problem is solved.
Step 4 Check the sensor (duplex exit) for damage, and if necessary, replace the external duplex unit assembly. Does the problem remain?	Go to step 5.	The problem is solved.
Step 5 Check if the display on the operator panel changes every time the sensing area of the sensor (duplex exit) is interrupted or blocked. **a** Enter the Diagnostic mode. **b** Select **Duplex sensor tests**. **c** Select **Sensor test**. **d** Observe the line item, "exit." If necessary, replace the connection, the external duplex unit assembly, or the external duplex assembly. Does the problem remain?	Contact the next level of support.	The problem is solved.

External duplex assembly error (external duplex) service check

Action	Yes	No
Step 1 Remove all media present in the media path. Does the problem remain?	Go to step 2.	Problem is solved.
Step 2 Reinstall all media properly. Does the problem remain?	Go to step 3.	Problem is solved.
Step 3 Remove obstructions in the media path. Does the problem remain?	Go to step 4.	Problem is solved.
Step 4 Reinstall the external duplex assembly properly. Does the problem remain?	Go to step 5.	Problem is solved.
Step 5 Open and then close the rear door of the external duplex. Does the problem remain?	Go to step 6.	Problem is solved.
Step 6 Check all cable connections on the external duplex assembly, and if necessary, replace the connections. Does the problem remain?	Go to step 7.	Problem is solved.
Step 7 Check the external duplex assembly for damage, and if necessary, replace the external duplex assembly. Does the problem remain?	Contact next level of support.	Problem is solved.

241-245 paper jams

240–249 paper jams

1 Touch **Status/Supplies** to identify the location of the jam.

2 Pull the standard tray out.

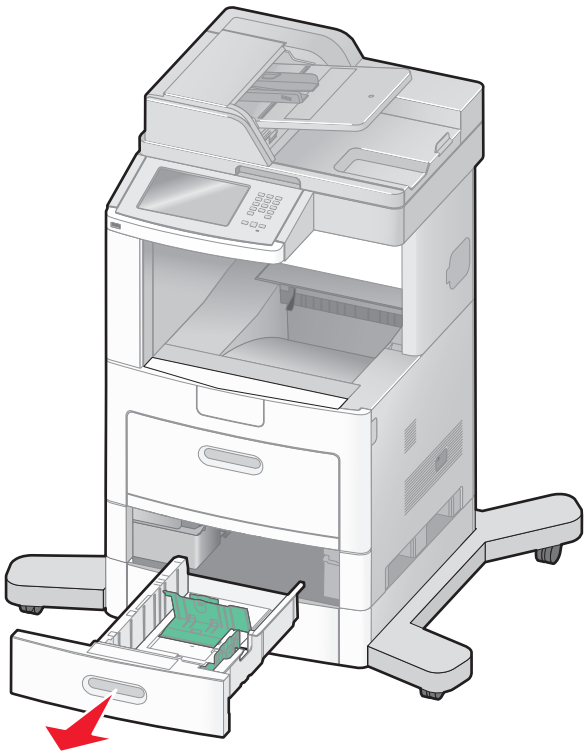

3 Remove any jammed paper, and then close the tray.

4 Touch **Continue**.

5 If the jam message persists, then pull out any optional trays.

6 Remove the jammed paper, and then insert the trays.

7 Touch **Continue**.

241 error messages

Error code	Description	Action
241.00	Media tray 1 area jam The media is jammed in the media tray 1 area.	Go to **"Tray area jam service check" on page 127**.
241.01	Pick motor control failure (media tray 1) The pick motor does not reach the proper operating speed at the specified time.	Go to **"Tray pick motor load error service check" on page 129**

Error code	Description	Action
241.06	Sensor (input) late jam (tray 1 or MPF) The media is late reaching the sensor (input) within the specified time.	Go to **"Sensor (input) late jam service check" on page 73**.
241.07	Pick motor load error (media tray 1) The pick motor has failed or caused high mechanical load due to paper jam or bind.	Go to **"Tray pick motor load error service check" on page 129**
241.08		
241.10	Sensor (input) late jam (tray 1) The media is late reaching the sensor (input) within the specified time.	Go to **"Sensor (input) late jam service check" on page 73**.
241.11		
241.12	Sensor (input) late jam (tray 1 or envelope feeder) The media is late reaching the sensor (input) within the specified time.	
241.14		
241.15		
241.16	Sensor (input) late jam (tray 1) The media is late reaching the sensor (input) within the specified time.	
241.18		
241.19	Pick motor control failure (tray 1) The pick motor does not reach the proper operating speed at the specified time.	Go to **"Tray pick motor load error service check" on page 129**.
241.20	Tray 1 pick motor lost encoder failure (tray 1) The pick motor is not reporting pulses back to the engine.	Go to **"Tray pick motor lost encoder failure service check" on page 131**.

242 error messages

Error code	Description	Action
242.00	Media tray 2 area jam The media is jammed in the media tray 2 area.	Go to **"Tray area jam service check" on page 127**.
242.02	Sensor (pass through) late jam (tray 2) The media is late reaching the sensor (pass through) within the specified time.	Go to **"Sensor (pass through) late jam service check" on page 101**.
242.03	Sensor (pass through) late jam (tray 2) The media is late reaching the sensor (pass through) within the specified time.	
242.04	Sensor (pass through) late jam (tray 2) The media is late reaching the sensor (pass through) within the specified time.	
242.05	Sensor (pass through) late jam (tray 2) The media is late reaching the sensor (pass through) within the specified time.	
242.06	Sensor (pass through) late jam (tray 2) The media is late reaching the sensor (pass through) within the specified time.	
242.08	Sensor (pass through) lingering jam (tray 2) Media reached the sensor (pass through) within the specified time, but did not clear it within the specified time.	Go to **"Sensor (pass through) lingering jam service check" on page 127**.
242.09	Sensor (input) late jam (tray 2) The media is late reaching the sensor (input) within the specified time.	Go to **"Sensor (pass through) late jam service check" on page 101**.
242.10	Sensor (pass through) late jam (tray 2) The media is late reaching the sensor (pass through) within the specified time.	Go to **"Sensor (pass through) late jam service check" on page 101**.
242.13	Sensor (pass through) static jam (tray 2) Media remains on the sensor (input) during the warm-up sequence.	Go to **"Sensor (pass through) static jam service check" on page 129**.
242.16	Sensor (pass through) late jam (tray 2) The media is late reaching the sensor (pass through) within the specified time.	Go to **"Sensor (pass through) late jam service check" on page 101**.
242.17	Media tray pulled jam (tray 2) A media tray above the source tray was pulled during the printing process.	Go to **"Media tray pulled jam service check" on page 131**.
242.18	Pick retry timeout (tray 2) Restart the printer.	N/A
242.19	Pick retry timeout (tray 2) Restart the printer.	

Error code	Description	Action
242.32	Tray 2 pick motor overrun failure (tray 2) The pick motor encoder continues to detect pulses after the motor was turned off.	Go to **"Tray pick motor lost encoder failure service check" on page 131**.
242.33	Tray 2 not ready (tray 2) Tray was not properly pushed into the machine.	Go to **"Tray not ready service check" on page 132**.
242.34	Empty tray pick attempted (tray 2) The pick arm attempted to pick with no media in the tray.	Go to **"Empty tray pick attempted service check" on page 132**.
242.35	Pick page received while POR not yet done (tray 2) Media remains on the sensor (input) during the warm-up sequence.	Go to **"Sensor (pass through) static jam service check" on page 129**.
242.36	Sensor (pass through) static jam (tray 2) Media remains on the sensor (input) during the warm-up sequence.	
242.37	Sensor (pass through) late jam (tray 2) The media is late reaching the sensor (pass through) within the specified time.	Go to **"Sensor (pass through) late jam service check" on page 101**.
242.39	Media tray pulled jam A media tray above the source tray was pulled during the printing process.	Go to **"Media tray pulled jam service check" on page 131**.
242.40	Sensor (pass through) lingering jam (tray 2) Media reached the sensor (pass through) within the specified time, but did not clear it within the specified time.	Go to **"Sensor (pass through) lingering jam service check" on page 127**.
242.49	HCIT tray lift motor stalled failure (tray 2) The HCIT tray lift motor has stalled or has become obstructed.	Go to **"HCIT tray lift motor stalled failure service check" on page 132**.
242.50	HCIT tray lift motor underspeed failure (tray 2) The HCIT tray lift motor does not rotate at the specified speed.	
242.52	HCIT tray lift motor overrun failure (tray 2) The HCIT tray lift motor continues to detect pulses after the motor has turned off.	
242.65	Pick motor load error (tray 2) The pick motor has failed or caused high mechanical load due to paper jam or bind.	Go to **"Tray pick motor load error service check" on page 129**.

Error code	Description	Action
242.66	Pick motor underspeed error (tray 2) The pick motor does not rotate at the specified speed.	Go to **"Tray pick motor control failure service check" on page 130**.
242.67	Pick motor overspeed error (tray 2) The pick motor does not rotate at the specified speed.	
242.68	Pick motor stop error (tray 2) Pick motor stop error detected by options tray x.	
242.69	Pick motor control failure (tray 2) The pick motor does not reach the proper operating speed at the specified time.	

243 error messages

Error code	Description	Action
243.00	Media tray 3 area jam The media is jammed in the media tray 3 area.	Go to **"Tray area jam service check" on page 127**.
243.02	Sensor (pass through) late jam (tray 3) The media is late reaching the sensor (pass through) within the specified time.	Go to **"Sensor (pass through) late jam service check" on page 101**.
243.03		
243.04		
243.05		
243.06		
243.08	Sensor (pass through) lingering jam (tray 3) Media reached the sensor (pass through) within the specified time, but did not clear it within the specified time.	Go to **"Sensor (pass through) lingering jam service check" on page 127**.
243.09	Sensor (input) late jam (tray 3) The media is late reaching the sensor (input) within the specified time.	Go to **"Sensor (pass through) late jam service check" on page 101**.
243.10	Sensor (pass through) late jam (tray 3) The media is late reaching the sensor (pass through) within the specified time.	Go to **"Sensor (pass through) late jam service check" on page 101**.
243.13	Sensor (pass through) static jam (tray 3) Media remains on the sensor (input) during the warm-up sequence.	Go to **"Sensor (pass through) static jam service check" on page 129**.
243.16	Sensor (pass through) late jam (tray 3) The media is late reaching the sensor (pass through) within the specified time.	Go to **"Sensor (pass through) late jam service check" on page 101**.
243.17	Media tray pulled jam (tray 3) A media tray above the source tray was pulled during the printing process.	Go to **"Media tray pulled jam service check" on page 131**.

Error code	Description	Action
243.18	Pick retry timeout (tray 3) The engine timed out waiting for the tray 3 to report ready before the first pick attempt. Thus, turn the machine off, and then turn it on.	N/A
243.19		
243.33	Tray 3 not ready (tray 3) Tray was not properly pushed into the machine.	Go to **"Tray not ready service check" on page 132**.
243.34	Empty tray pick attempted (tray 3) The pick arm attempted to pick with no media in the tray.	Go to **"Empty tray pick attempted service check" on page 132**.
243.35	Pick page received while POR not yet done (tray 3) Media remains on the sensor (input) during the warm-up sequence.	Go to **"Sensor (pass through) static jam service check" on page 129**.
243.36	Sensor (pass through) static jam (tray 3) Media remains on the sensor (input) during the warm-up sequence.	
243.37	Sensor (pass through) late jam (tray 3) The media is late reaching the sensor (pass through) within the specified time.	Go to **"Sensor (pass through) late jam service check" on page 101**.
243.39	Media tray pulled jam A media tray above the source tray was pulled during the printing process.	Go to **"Media tray pulled jam service check" on page 131**.
243.40	Sensor (pass through) lingering jam (tray 3) Media reached the sensor (pass through) within the specified time, but did not clear it within the specified time.	Go to **"Sensor (pass through) lingering jam service check" on page 127**.
243.49	HCIT tray lift motor stalled failure (tray 3) The HCIT tray lift motor has stalled or has become obstructed.	Go to **"HCIT tray lift motor stalled failure service check" on page 132**.
243.50	HCIT tray lift motor underspeed failure (tray 3) The HCIT tray lift motor does not rotate at the specified speed.	
243.52	HCIT tray lift motor overrun failure (tray 3) The HCIT tray lift motor continues to detect pulses after the motor has turned off.	
243.65	Pick motor load error (tray 3) The pick motor has failed or caused high mechanical load due to paper jam or bind.	Go to **"Tray pick motor load error service check" on page 129**.

Error code	Description	Action
243.66	Pick motor underspeed error (tray 3) The pick motor does not rotate at the specified speed.	Go to **"Tray pick motor control failure service check" on page 130**.
243.67	Pick motor overspeed error (tray 3) The pick motor does not rotate at the specified speed.	
243.68	Pick motor stop error (tray 3) Pick motor stop error detected by options tray x.	
243.69	Pick motor control failure (tray 3) The pick motor does not reach the proper operating speed at the specified time.	

244 error messages

Error code	Description	Action
244.00	Media tray 4 area jam The media is jammed in the media tray 4 area.	Go to **"Tray area jam service check" on page 127**.
244.02	Sensor (pass through) late jam (tray 4) The media is late reaching the sensor (pass through) within the specified time.	Go to **"Sensor (pass through) late jam service check" on page 101**.
244.03		
244.04		
244.05		
244.06		
244.08	Sensor (pass through) lingering jam (tray 4) Media reached the sensor (pass through) within the specified time, but did not clear it within the specified time.	Go to **"Sensor (pass through) lingering jam service check" on page 127**.
244.09	Sensor (input) late jam (tray 4) The media is late reaching the sensor (input) within the specified time.	Go to **"Sensor (pass through) late jam service check" on page 101**.
244.10	Sensor (pass through) late jam (tray 4) The media is late reaching the sensor (pass through) within the specified time.	Go to **"Sensor (pass through) late jam service check" on page 101**.
244.13	Sensor (pass through) static jam (tray 4) Media remains on the sensor (input) during the warm-up sequence.	Go to **"Sensor (pass through) static jam service check" on page 129**.
244.16	Sensor (pass through) late jam (tray 4) The media is late reaching the sensor (pass through) within the specified time.	Go to **"Sensor (pass through) late jam service check" on page 101**.
244.17	Media tray pulled jam (tray 4) A media tray above the source tray was pulled during the printing process.	Go to **"Media tray pulled jam service check" on page 131**.

Error code	Description	Action
244.18	Pick retry timeout (tray 4) The engine timed out waiting for the tray 4 to report ready before the first pick attempt. Thus, turn the machine off, and then turn it on.	N/A
244.19		
244.33	Tray 4 not ready (tray 4) Tray was not properly pushed into the machine.	Go to **"Tray not ready service check" on page 132**.
244.34	Empty tray pick attempted (tray 4) The pick arm attempted to pick with no media in the tray.	Go to **"Empty tray pick attempted service check" on page 132**.
244.35	Pick page received while POR not yet done (tray 4) Media remains on the sensor (input) during the warm-up sequence.	Go to **"Sensor (pass through) static jam service check" on page 129**.
244.36	Sensor (pass through) static jam (tray 4) Media remains on the sensor (input) during the warm-up sequence.	
244.37	Sensor (pass through) late jam (tray 4) The media is late reaching the sensor (pass through) within the specified time.	Go to **"Sensor (pass through) late jam service check" on page 101**.
244.39	Media tray pulled jam A media tray above the source tray was pulled during the printing process.	Go to **"Media tray pulled jam service check" on page 131**.
244.40	Sensor (pass through) lingering jam (tray 4) Media reached the sensor (pass through) within the specified time, but did not clear it within the specified time.	Go to **"Sensor (pass through) lingering jam service check" on page 127**.
244.49	HCIT tray lift motor stalled failure (tray 4) The HCIT tray lift motor has stalled or has become obstructed.	Go to **"HCIT tray lift motor stalled failure service check" on page 132**.
244.50	HCIT tray lift motor underspeed failure (tray 4) The HCIT tray lift motor does not rotate at the specified speed.	
244.52	HCIT tray lift motor overrun failure (tray 4) The HCIT tray lift motor continues to detect pulses after the motor has turned off.	
244.65	Pick motor load error (tray 4) The pick motor has failed or caused high mechanical load due to paper jam or bind.	Go to **"Tray pick motor load error service check" on page 129**.

Error code	Description	Action
244.66	Pick motor underspeed error (tray 4) The pick motor does not rotate at the specified speed.	Go to **"Tray pick motor control failure service check" on page 130**.
244.67	Pick motor overspeed error (tray 4) The pick motor does not rotate at the specified speed.	
244.68	Pick motor stop error (tray 4) Pick motor stop error detected by options tray x.	
244.69	Pick motor control failure (tray 4) The pick motor does not reach the proper operating speed at the specified time.	

245 error messages

Error code	Description	Action
245.00	Media tray 5 area jam The media is jammed in the media tray 5 area.	Go to **"Tray area jam service check" on page 127**.
245.02	Sensor (pass through) late jam (tray 5) The media is late reaching the sensor (pass through) within the specified time.	Go to **"Sensor (pass through) late jam service check" on page 101**.
245.03		
245.04		
245.05		
245.06		
245.08	Sensor (pass through) lingering jam (tray 5) Media reached the sensor (pass through) within the specified time, but did not clear it within the specified time.	Go to **"Sensor (pass through) lingering jam service check" on page 127**.
245.09	Sensor (input) late jam (tray 5) The media is late reaching the sensor (input) within the specified time.	Go to **"Sensor (pass through) late jam service check" on page 101**.
245.10	Sensor (pass through) late jam (tray 5) The media is late reaching the sensor (pass through) within the specified time.	Go to **"Sensor (pass through) late jam service check" on page 101**.
245.13	Sensor (pass through) static jam (tray 5) Media remains on the sensor (input) during the warm-up sequence.	Go to **"Sensor (pass through) static jam service check" on page 129**.
245.16	Sensor (pass through) late jam (tray 5) The media is late reaching the sensor (pass through) within the specified time.	Go to **"Sensor (pass through) late jam service check" on page 101**.
245.17	Media tray pulled jam (tray 5) A media tray above the source tray was pulled during the printing process.	Go to **"Media tray pulled jam service check" on page 131**.

Error code	Description	Action
245.18	Pick retry timeout (tray 5) The engine timed out waiting for the tray 5 to report ready before the first pick attempt. Thus, turn the machine off, and then turn it on.	N/A
245.19		
245.33	Tray 5 not ready (tray 5) Tray was not properly pushed into the machine.	Go to **"Tray not ready service check" on page 132**.
245.34	Empty tray pick attempted (tray 5) The pick arm attempted to pick with no media in the tray.	Go to **"Empty tray pick attempted service check" on page 132**.
245.35	Pick page received while POR not yet done (tray 5) Media remains on the sensor (input) during the warm-up sequence.	Go to **"Sensor (pass through) static jam service check" on page 129**.
245.36	Sensor (pass through) static jam (tray 5) Media remains on the sensor (input) during the warm-up sequence.	
245.37	Sensor (pass through) late jam (tray 5) The media is late reaching the sensor (pass through) within the specified time.	Go to **"Sensor (pass through) late jam service check" on page 101**.
245.39	Media tray pulled jam A media tray above the source tray was pulled during the printing process.	Go to **"Media tray pulled jam service check" on page 131**.
245.40	Sensor (pass through) lingering jam (tray 5) Media reached the sensor (pass through) within the specified time, but did not clear it within the specified time.	Go to **"Sensor (pass through) lingering jam service check" on page 127**.
245.49	HCIT tray lift motor stalled failure (tray 5) The HCIT tray lift motor has stalled or has become obstructed.	Go to **"HCIT tray lift motor stalled failure service check" on page 132**.
245.50	HCIT tray lift motor underspeed failure (tray 5) The HCIT tray lift motor does not rotate at the specified speed.	
245.52	HCIT tray lift motor overrun failure (tray 5) The HCIT tray lift motor continues to detect pulses after the motor has turned off.	
245.65	Pick motor load error (tray 5) The pick motor has failed or caused high mechanical load due to paper jam or bind.	Go to **"Tray pick motor load error service check" on page 129**.

Error code	Description	Action
245.66	Pick motor underspeed error (tray 5) The pick motor does not rotate at the specified speed.	Go to **"Tray pick motor control failure service check" on page 130**.
245.67	Pick motor overspeed error (tray 5) The pick motor does not rotate at the specified speed.	
245.68	Pick motor stop error (tray 5) Pick motor stop error detected by options tray x.	
245.69	Pick motor control failure (tray 5) The pick motor does not reach the proper operating speed at the specified time.	

Tray area jam service check

Action	Yes	No
Step 1 Remove all media present in media path. Does the problem remain?	Go to step 2.	Problem is solved.
Step 2 Properly reinstall media. Does the problem remain?	Go to step 3.	Problem is solved.
Step 3 Remove obstructions in the media path. Does the problem remain?	Contact next level of support.	Problem is solved.

Sensor (pass through) lingering jam service check

Action	Yes	No
Step 1 Replace the media or change the media size setup in all the trays. Does the problem remain?	Go to step 2.	The problem is solved.
Step 2 Remove obstructions in the media tray pass through areas. Does the problem remain?	Go to step 3.	The problem is solved.

Action	Yes	No
Step 3 Check if the display on the operator panel changes every time the sensing area of the media tray sensor (pass through) is interrupted or blocked. **a** Enter the Diagnostic mode. **b** Select **Input tray tests**. **c** Select **Sensor test**. **d** Select the appropriate tray number. **e** Observe the line item, "pass through," for the appropriate media tray. If necessary, replace the connection or the sensor. Go to **"250-sheet tray controller card assembly removal" on page 407**. Does the problem remain?	Go to step 4.	The problem is solved.
Step 4 Perform a print test and check the main motor assembly if media is properly transported through the pass through areas of the media trays. If necessary, replace the main drive motor assembly. Go to **"Main drive motor assembly removal" on page 312**. Does the problem remain?	Go to step 5.	The problem is solved.
Step 5 Perform a print test using the appropriate input tray, and if necessary, replace the input option. Does the problem remain?	Contact the next level of support.	The problem is solved.

Sensor (pass through) static jam service check

Action	Yes	No
Step 1 Remove any prestaged or jammed media in the media path. Does the problem remain?	Go to step 2.	Problem is solved.
Step 2 Check if the display on the operator panel changes every time the sensing area of the media tray sensor (pass through) is interrupted or blocked. **a** Enter the diagnostic mode. **b** Select Input tray tests. **c** Select Sensor test. **d** Select the appropriate tray number. **e** Observe the line item "pass through" for the appropriate media tray. If necessary, replace the connection or the sensor. See **"250-sheet tray controller card assembly removal" on page 407**. Does the problem remain?	Go to step 3.	Problem is solved.
Step 3 Perform a print test using the appropriate input tray, and if necessary, replace the input option. Does the problem remain?	Contact next level of support.	Problem is solved.

Tray pick motor load error service check

Action	Yes	No
Step 1 Remove all media present in the media path. Does the problem remain?	Go to step 2.	Problem is solved.
Step 2 Remove excess media from tray 1. Does the problem remain?	Go to step 3.	Problem is solved.
Step 3 Check, clean or replace the pick rolls for wear and excess contamination. See **"Pick arm assembly removal" on page 359**. Does the problem remain?	Go to step 4.	Problem is solved.

Action	Yes	No
Step 4 Check all connections on the pick arm assembly, and if necessary, replace the connections. Does the problem remain?	Go to step 5.	Problem is solved.
Step 5 Check all connections on the system card assembly, and if necessary, replace the connections. Does the problem remain?	Go to step 6.	Problem is solved.
Step 6 Replace the pick arm assembly. See **"Pick arm assembly removal" on page 359**. Does the problem remain?	Go to step 7.	Problem is solved.
Step 7 Replace the system card assembly. See **"System card assembly removal" on page 321**. Does the problem remain?	Contact next level of support.	Problem is solved.

Tray pick motor control failure service check

Action	Yes	No
Step 1 Remove all media present in the media path. Does the problem remain?	Go to step 2.	Problem is solved.
Step 2 Remove excess media from tray 1. Does the problem remain?	Go to step 3.	Problem is solved.
Step 3 Check all connections on the pick arm assembly, and if necessary, replace the connections. Does the problem remain?	Go to step 4.	Problem is solved.
Step 4 Check all connections on the system card assembly, and if necessary, replace the connections. Does the problem remain?	Go to step 5.	Problem is solved.

Action	Yes	No
Step 5 Replace the pick arm assembly. See **"Pick arm assembly removal" on page 359**. Does the problem remain?	Go to step 6.	Problem is solved.
Step 6 Replace the system card assembly. See **"System card assembly removal" on page 321**. Does the problem remain?	Contact next level of support.	Problem is solved.

Tray pick motor lost encoder failure service check

Action	Yes	No
Step 1 Check all connections on the pick arm assembly, and if necessary, replace the connections. Does the problem remain?	Go to step 2.	Problem is solved.
Step 2 Check all connections on the system card assembly, and if necessary, replace the connections. Does the problem remain?	Go to step 3.	Problem is solved.
Step 3 Replace the pick arm assembly. See **"Pick arm assembly removal" on page 359**. Does the problem remain?	Contact next level of support.	Problem is solved.

Media tray pulled jam service check

Action	Yes	No
Step 1 Remove all media present in the media path. Does the problem remain?	Go to step 2.	Problem is solved.
Step 2 Close all media trays. Does the problem remain?	Contact next level of support.	Problem is solved.

Tray not ready service check

Action	Yes	No
Step 1 Check the size sensing fingers on the media tray for damage, and if necessary, replace the media tray assembly. Does the problem remain?	Go to step 2.	Problem is solved.
Step 2 Check the switch (media size) for proper connection, and if necessary, replace the switch (media size). See **"Switch (media size) assembly removal" on page 320**. Does the problem remain?	Contact next level of support.	Problem is solved.

Empty tray pick attempted service check

Action	Yes	No
Check the media out actuator for damage, and if necessary, replace the media out actuator. See **"Tray roller catch assembly removal" on page 385**. Does the problem remain?	Contact next level of support.	Problem is solved.

HCIT tray lift motor stalled failure service check

Action	Yes	No
Step 1 Properly insert the HCIT media tray assembly into the machine. Does the problem remain?	Go to step 2.	Problem is solved.
Step 2 Check the HCIT tray lift motor assembly for binding or damage, and if necessary, replace the HCIT tray lift drive motor assembly. Go to **"High capacity input tray (HCIT) tray lift drive motor assembly removal" on page 427**. Does the problem remain?	Contact next level of support.	Problem is solved.

250 paper jams

250 paper jam

1 Touch **Status/Supplies** to identify the location of the jam.

2 Remove the paper from the multipurpose feeder.

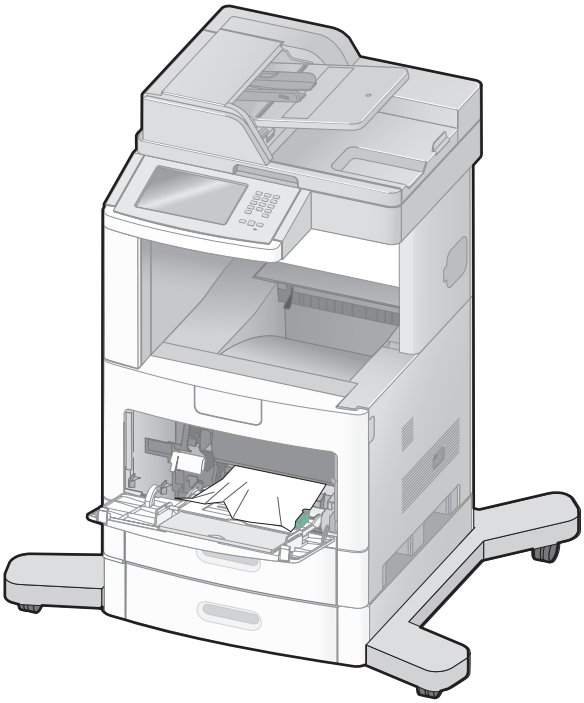

3 Flex the sheets of paper back and forth to loosen them, and then fan them. Do not fold or crease the paper. Straighten the edges on a level surface.

4 Load the paper into the multipurpose feeder.

5 Slide the paper guide toward the inside of the tray until it lightly rests against the edge of the paper.

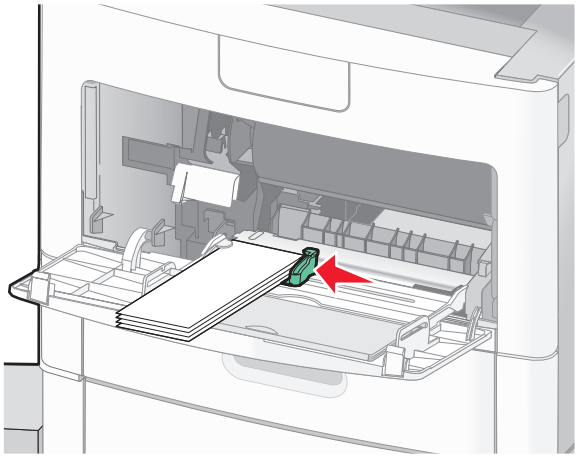

6 Touch **Continue**.

250 error messages

Error code	Description	Action
250.00	MPF area jam The media is jammed in the media tray 5 area.	Go to **"Sensor (input) service check" on page 70**.
250.03	Sensor (input) late jam (MPF) The media is late reaching the sensor (input) within the specified time.	Go to **"Sensor (input) late jam service check" on page 73**.
250.06		
250.07		
250.08		
250.09		
250.10		
250.11		

260 paper jams

260 paper jam

Touch **Status/Supplies** to identify the location of the jam. The envelope feeder feeds envelopes from the bottom of the stack; the bottom envelope will be the one that is jammed.

1. Lift the envelope weight.
2. Remove all envelopes.
3. If the jammed envelope has entered the printer and cannot be pulled out, then lift the envelope feeder up and then out of the printer, and then set it aside.
4. Remove the envelope from the printer.

   Note: If you cannot remove the envelope, then the print cartridge will have to be removed. For more information, see **"200 and 201 paper jams" on page 62**.
5. Reinstall the envelope feeder. Make sure it *snaps* into place.
6. Flex and stack the envelopes.
7. Load the envelopes in the envelope feeder.
8. Adjust the paper guide.
9. Lower the envelope weight.
10. Touch **Continue**.

260 error messages

Error code	Description	Action
260.00	Envelope feeder area jam The media is jammed in the envelope feeder area.	Go to **"Envelope feeder area jam service check" on page 135**.
260.01 260.02	Envelope feeder assembly error Mechanical feed error or timing error.	Go to **"Envelope feeder assembly error service check" on page 136**.
260.05	Sensor (envelope feeder pass through) lingering jam (envelope feeder) The media reached the sensor (envelope feeder pass through), but did not clear it in the specified time.	Go to **"Sensor (envelope feeder pass through) lingering jam (envelope feeder) service check" on page 137**.
260.06	Sensor (envelope feeder pass through) late jam (envelope feeder) The media is late reaching the sensor (envelope feeder pass through) within the specified time.	Go to **"Sensor (envelope feeder pass through) late jam (envelope feeder) service check" on page 138**.
260.07 260.10 260.11 260.12	Sensor (input) late jam (envelope feeder) The media is late reaching the sensor (input) within the specified time.	Go to **"Sensor (input) late jam service check" on page 73**.
260.13	sensor (envelope feeder pass through) static jam Media remains on the sensor (envelope feeder pass through) during the warm-up sequence.	Go to **"Sensor (envelope feeder pass through) static jam service check" on page 139**.
260.14 260.15 260.16	Sensor (input) late jam (envelope feeder) The media is late reaching the sensor (input) within the specified time.	Go to **"Sensor (input) late jam service check" on page 73**.

Envelope feeder area jam service check

Action	Yes	No
Step 1 Remove the envelope feeder. Does the problem remain?	Go to step 2.	Problem is solved.
Step 2 Remove all media present in media path. Does the problem remain?	Go to step 3.	Problem is solved.
Step 3 Properly reinstall media. Does the problem remain?	Go to step 4.	Problem is solved.

Action	Yes	No
Step 4 Remove obstructions in the media path. Does the problem remain?	Go to step 5.	Problem is solved.
Step 5 Check the sensor (input) for damage, and if necessary, replace the sensor (input). See **“Sensor (input) removal ” on page 334**. Does the problem remain?	Go to step 6.	Problem is solved.
Step 6 Check if the display on the operator panel changes every time the sensing area of the above sensor is interrupted or blocked. **a** Enter the diagnostic mode. **b** Select Base sensor test. **c** Observe the line item “input.” If necessary, then replace the sensor (input). Does the problem remain?	Go to step 7.	Problem is solved.
Step 7 Check the above sensor for proper connection, and if necessary, replace the connection. Does the problem remain?	Contact next level of support.	Problem is solved.

Envelope feeder assembly error service check

Action	Yes	No
Step 1 Remove the envelope feeder. Does the problem remain?	Go to step 2.	Problem is solved.
Step 2 Remove all media present in media path. Does the problem remain?	Go to step 3.	Problem is solved.
Step 3 Properly reinstall media. Does the problem remain?	Go to step 4.	Problem is solved.
Step 4 Remove obstructions in the media path. Does the problem remain?	Go to step 5.	Problem is solved.

Action	Yes	No
Step 5 Properly install the envelope feeder assembly. Does the problem remain?	Go to step 6.	Problem is solved.
Step 6 Check all connections on the envelope feeder assembly, and if necessary, replace the connections. Does the problem remain?	Go to step 7.	Problem is solved.
Step 7 Replace the envelope feeder assembly. Does the problem remain?	Contact next level of support.	Problem is solved.

Sensor (envelope feeder pass through) lingering jam (envelope feeder) service check

Action	Yes	No
Step 1 Remove the envelope feeder. Does the problem remain?	Go to step 2.	Problem is solved.
Step 2 Remove all media present in media path. Does the problem remain?	Go to step 3.	Problem is solved.
Step 3 Remove obstructions in the media path. Does the problem remain?	Go to step 4.	Problem is solved.
Step 4 Properly install the envelope feeder assembly. Does the problem remain?	Go to step 5.	Problem is solved.
Step 5 Check all connections on the envelope feeder assembly, and if necessary, replace the connections. Does the problem remain?	Go to step 6.	Problem is solved.
Step 6 Replace the envelope feeder assembly. Does the problem remain?	Contact next level of support.	Problem is solved.

Sensor (envelope feeder pass through) late jam (envelope feeder) service check

Action	Yes	No
Step 1 Remove the envelope feeder. Does the problem remain?	Go to step 2.	Problem is solved.
Step 2 Remove all media present in media path. Does the problem remain?	Go to step 3.	Problem is solved.
Step 3 Remove excess media from the envelope feeder. Does the problem remain?	Go to step 4.	Problem is solved.
Step 4 Check the envelope feeder pick roll for wear and excess contamination. If necessary, clean or replace the pick roll. Does the problem remain?	Go to step 5.	Problem is solved.
Step 5 Check all connections on the envelope feeder assembly, and if necessary, replace the connections. Does the problem remain?	Go to step 6.	Problem is solved.
Step 6 Check all connections on the system card assembly, and if necessary, replace the connections. Does the problem remain?	Go to step 7.	Problem is solved.
Step 7 Replace the envelope feeder assembly. Does the problem remain?	Go to step 8.	Problem is solved.
Step 8 Replace the system card assembly. Go to **"System card assembly removal" on page 321**. Does the problem remain?	Contact next level of support.	Problem is solved.

Sensor (envelope feeder pass through) static jam service check

Action	Yes	No
Step 1 Remove the envelope feeder. Does the problem remain?	Go to step 2.	Problem is solved.
Step 2 Remove all media present in media path. Does the problem remain?	Go to step 3.	Problem is solved.
Step 3 Replace the envelope feeder assembly. Does the problem remain?	Contact next level of support.	Problem is solved.

27y paper jams

270–279 paper jams

To clear a jam in the high-capacity output stacker or the 4-bin mailbox:

1. Touch **Status/Supplies** to identify the location of the jam.
2. If the paper is exiting into a bin, then pull the paper straight out, and then touch **Continue**.
   If not, then continue with step 3.
3. Pull down the output bin door or doors.
4. Remove the jammed paper.
5. Close the output bin door or doors.
6. Touch **Continue**.

27y.xx error messages

Note: [y] represents the bin number.

Error code	Description	Action
271.03	The media reached the sensor (output pass through) but did not clear it in the specified time. This applies to: • High capacity output • Output expander	Go to **"Sensor (output pass through) lingering jam service check" on page 141**.

Error code	Description	Action
271.04	The media is late reaching the sensor (output pass through) within the specified time. This applies to: • High capacity output • Output expander	Go to **"Sensor (output pass through) late jam service check" on page 142**.
271.05	The media reached the sensor (output pass through) but did not clear it in the specified time. This applies to: • High capacity output • Output expander	Go to **"Sensor (output pass through) lingering jam service check" on page 141**.
27y.14	Media remains on the sensor (output pass through) during the warm up sequence. This applies to: • High capacity stacker • Mailbox • Offset stacker • Output expander	Go to **"Sensor (output pass through) static jam service check" on page 143**.
27y.15	Media remains on the sensor (mailbox empty) during the warm up sequence. This applies to: • High capacity stacker • Mailbox • Offset stacker • Output expander	Go to **"Sensor (mailbox empty) static jam service check" on page 146**.
27y.29 27y.50	The media reached the sensor (output pass through) but did not clear it in the specified time. This applies to: • High capacity stacker • Mailbox • Offset stacker • Output expander	Go to **"Sensor (output pass through) lingering jam service check" on page 141**.
27y.50	The sensor (left tamper HP) does not detect that the tamper has moved from home position.	Go to **"Left tamper does not leave home position failure (offset stacker) service check" on page 147**.
27x.51	The media is late reaching the sensor (output pass through) within the specified time. **Note:** This only applies to mailbox.	Go to **"Sensor (output pass through) late jam service check" on page 142**.
27y.51	The sensor (right tamper HP) does not detect that the tamper has moved from home position. **Note:** This only applies to the offset stacker.	Go to **"Right tamper does not leave home position failure (offset stacker) service check" on page 147**.
271.52	The media reached the sensor (mailbox empty) but did not clear it in the specified time.	Go to **"Sensor (output pass through) lingering jam service check" on page 141**.

Error code	Description	Action
271.53	The media is late reaching the sensor (mailbox empty) within the specified time.	Go to **"Sensor (mailbox empty) late jam service check" on page 144**.
27y.54	The media reached the sensor (output pass through) but did not clear it in the specified time. **Note:** This only applies to mailbox.	Go to **"Sensor (output pass through) lingering jam service check" on page 141**.
27y.55	The media reached the sensor (mailbox empty) but did not clear it in the specified time.	Go to **"Sensor (mailbox empty) lingering jam service check" on page 145**.
27y.58	The media is late reaching the sensor (output pass through) within the specified time. This applies to: • High capacity stacker • Mailbox • Offset stacker • Output expander	Go to **"Sensor (output pass through) late jam service check" on page 142**.

Sensor (output pass through) lingering jam service check

Action	Yes	No
Step 1 Make sure that the output option is properly installed. Does the problem remain?	Go to step 2.	The problem is solved.
Step 2 Make sure that the media path between the base machine and the output option is free from any obstructions. Does the problem remain?	Go to step 3.	The problem is solved.
Step 3 Check the sensor (stapler pass through) for proper operation. **a** Enter the Diagnostics menu, and then navigate to: **Output bin tests** > **Sensor test** > **Output bin [x]** **b** Observe the line item, "passthru." Does the display on the operator panel change every time the sensing area of the sensor is interrupted or blocked?	Go to step 6.	Go to step 4.
Step 4 **a** Check the sensor (output pass through) for proper connection. **b** Replace the connection, if necessary. Does the problem remain?	Go to step 5.	The problem is solved.

Action	Yes	No
Step 5 Replace the sensor (output pass through). Go to **"4-bin mailbox assembly sensor (pass through) removal" on page 397**. Does the problem remain?	Go to step 6.	The problem is solved.
Step 6 Perform a print test using the option. Does the problem remain?	Go to step 7.	The problem is solved.
Step 7 Replace the output option. Does the problem remain?	Contact the next level of support.	The problem is solved.

Sensor (output pass through) late jam service check

Action	Yes	No
Step 1 Make sure that the output option is properly installed. Does the problem remain?	Go to step 2.	The problem is solved.
Step 2 Make sure that the media path between the base machine and the output option is free from any obstructions. Does the problem remain?	Go to step 3.	The problem is solved.
Step 3 Check the sensor (stapler pass through) for proper operation. **a** Enter the Diagnostics menu, and then navigate to: **Output bin tests** > **Sensor test** > **Output bin [x]** **b** Observe the line item, "passthru." Does the display on the operator panel change every time the sensing area of the sensor is interrupted or blocked?	Go to step 6.	Go to step 4.
Step 4 **a** Check the sensor (output pass through) for proper connection. **b** Replace the connection, if necessary. Does the problem remain?	Go to step 5.	The problem is solved.

Action	Yes	No
Step 5 Replace the sensor (output pass through). Go to **“4-bin mailbox assembly sensor (pass through) removal” on page 397**. Does the problem remain?	Go to step 6.	The problem is solved.
Step 6 Perform a print test using the option. Does the problem remain?	Go to step 7.	The problem is solved.
Step 7 Replace the output option. Does the problem remain?	Contact the next level of support.	The problem is solved.

Sensor (output pass through) static jam service check

Action	Yes	No
Step 1 Make sure that the media path between the base machine and the output option is free from any obstructions. Does the problem remain?	Go to step 2.	The problem is solved.
Step 2 Check the sensor (stapler pass through) for proper operation. **a** Enter the Diagnostics menu, and then navigate to: **Output bin tests** > **Sensor test** > **Output bin [x]** **b** Observe the line item, “passthru.” Does the display on the operator panel change every time the sensing area of the sensor is interrupted or blocked?	Go to step 5.	Go to step 3.
Step 3 **a** Check the sensor (output pass through) for proper connection. **b** Replace the connection, if necessary. Does the problem remain?	Go to step 4.	The problem is solved.
Step 4 Replace the sensor (output pass through). Go to **“4-bin mailbox assembly sensor (pass through) removal” on page 397**. Does the problem remain?	Go to step 5.	The problem is solved.

Action	Yes	No
Step 5 Perform a print test using the option. Does the problem remain?	Go to step 6.	The problem is solved.
Step 6 Replace the output option. Does the problem remain?	Contact the next level of support.	The problem is solved.

Sensor (mailbox empty) late jam service check

Action	Yes	No
Step 1 Make sure that the output option is properly installed. Does the problem remain?	Go to step 2.	The problem is solved.
Step 2 Make sure that the media path between the base machine and the output option is free from any obstructions. Does the problem remain?	Go to step 3.	The problem is solved.
Step 3 Check the sensor (mailbox empty) for proper operation. **a** Enter the Diagnostics menu, and then navigate to: **Output bin tests** > **Sensor test** > **Output bin [x]** **b** Observe the line item, “mailbox empty.” Does the display on the operator panel change every time the sensing area of the sensor is interrupted or blocked?	Go to step 6.	Go to step 4.
Step 4 **a** Check the sensor (mailbox empty) for proper connection. **b** Replace the connection, if necessary. Does the problem remain?	Go to step 5.	The problem is solved.
Step 5 Replace the sensor (mailbox empty). Go to **“4-bin mailbox assembly sensor (mailbox empty) removal” on page 398**. Does the problem remain?	Go to step 6.	The problem is solved.
Step 6 Perform a print test using the option. Does the problem remain?	Go to step 7.	The problem is solved.

Action	Yes	No
Step 7 Replace the output option. Does the problem remain?	Contact the next level of support.	The problem is solved.

Sensor (mailbox empty) lingering jam service check

Action	Yes	No
Step 1 Make sure that the output option is properly installed. Does the problem remain?	Go to step 2.	The problem is solved.
Step 2 Make sure that the media path between the base machine and the output option is free from any obstructions. Does the problem remain?	Go to step 3.	The problem is solved.
Step 3 Check the sensor (mailbox empty) for proper operation. **a** Enter the Diagnostics menu, and then navigate to: **Output bin tests** > **Sensor test** > **Output bin [x]** **b** Observe the line item, “mailbox empty.” Does the display on the operator panel change every time the sensing area of the sensor is interrupted or blocked?	Go to step 6.	Go to step 4.
Step 4 **a** Check the sensor (mailbox empty) for proper connection. **b** Replace the connection, if necessary. Does the problem remain?	Go to step 5.	The problem is solved.
Step 5 Replace the sensor (mailbox empty). Go to **“4-bin mailbox assembly sensor (mailbox empty) removal” on page 398**. Does the problem remain?	Go to step 6.	The problem is solved.
Step 6 Perform a print test using the option. Does the problem remain?	Go to step 7.	The problem is solved.
Step 7 Replace the output option. Does the problem remain?	Contact the next level of support.	The problem is solved.

Sensor (mailbox empty) static jam service check

Action	Yes	No
Step 1 Check and clear the media path for partially fed or jammed media. Does the problem remain?	Go to step 2.	The problem is solved.
Step 2 Check the sensor (mailbox empty) for proper operation. **a** Enter the Diagnostics menu, and then navigate to: **Output bin tests** > **Sensor test** > **Output bin [x]** **b** Observe the line item, "mailbox empty." Does the display on the operator panel change every time the sensing area of the sensor is interrupted or blocked?	Go to step 5.	Go to step 3.
Step 3 **a** Check the sensor (mailbox empty) for proper connection. **b** Replace the connection, if necessary. Does the problem remain?	Go to step 4.	The problem is solved.
Step 4 Replace the sensor (mailbox empty). Go to **"4-bin mailbox assembly sensor (mailbox empty) removal" on page 398**. Does the problem remain?	Go to step 5.	The problem is solved.
Step 5 Perform a print test using the option. Does the problem remain?	Go to step 6.	The problem is solved.
Step 6 Replace the output option. Does the problem remain?	Contact the next level of support.	The problem is solved.

Left tamper does not leave home position failure (offset stacker) service check

Action	Yes	No
Step 1 Check all the connections on the output option controller card, and if necessary, replace the connections. Does the problem remain?	Go to step 2.	The problem is solved.
Step 2 Check the tamper drive belt for damage, and if necessary, replace the tamper drive belt. Does the problem remain?	Go to step 3.	The problem is solved.
Step 3 Check the left tamper motor assembly for damage, and if necessary, replace the left tamper motor assembly. Go to **"MFP stapler assembly tamper drive motor assembly removal" on page 492**. Does the problem remain?	Go to step 4.	The problem is solved.
Step 4 Check the sensor (tamper HP), and if necessary, replace the sensor. Go to **"Sensor (MFP stapler assembly tamper HP left and right) removal" on page 498**. Does the problem remain?	Go to step 5.	The problem is solved.
Step 5 Replace the output option. Does the problem remain?	Contact the next level of support.	The problem is solved.

Right tamper does not leave home position failure (offset stacker) service check

Action	Yes	No
Step 1 Check all the connections on the output option controller card, and if necessary, replace the connections. Does the problem remain?	Go to step 2.	The problem is solved.
Step 2 Check the tamper drive belt for damage, and if necessary, replace the tamper drive belt. Does the problem remain?	Go to step 3.	The problem is solved.

Action	Yes	No
Step 3 Replace the right tamper motor assembly. Go to **“MFP stapler assembly tamper drive motor assembly removal” on page 492**. Does the problem remain?	Go to step 4.	The problem is solved.
Step 4 Replace the sensor (tamper HP). Go to **“Sensor (MFP stapler assembly tamper HP left and right) removal” on page 498**. Does the problem remain?	Go to step 5.	The problem is solved.
Step 5 Replace the output option. Does the problem remain?	Contact the next level of support.	The problem is solved.

28y paper jams

280–282 paper jams

1. Touch **Status/Supplies** to identify the location of the jam.
2. Pull down the StapleSmart finisher door.
3. Remove the jammed paper.
4. Close the StapleSmart finisher door.
5. Touch **Continue**.

283 staple jams

1 Touch **Status/Supplies** to identify the location of the jam.

2 Press the latch to open the stapler door.

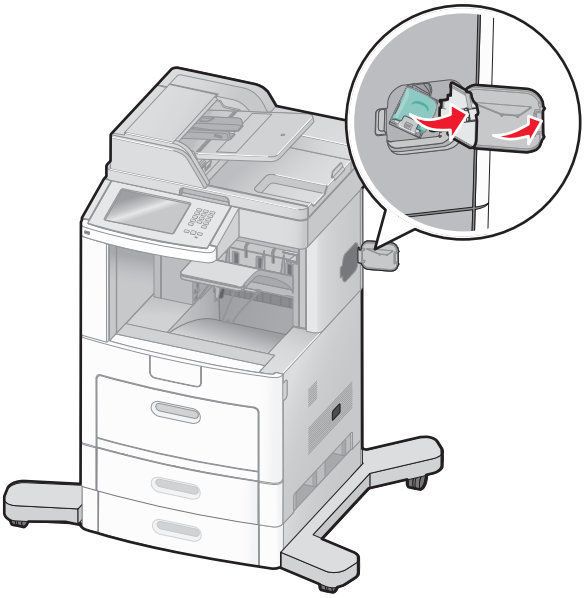

3 Pull the latch of the staple cartridge holder down, and then pull the holder out of the printer.

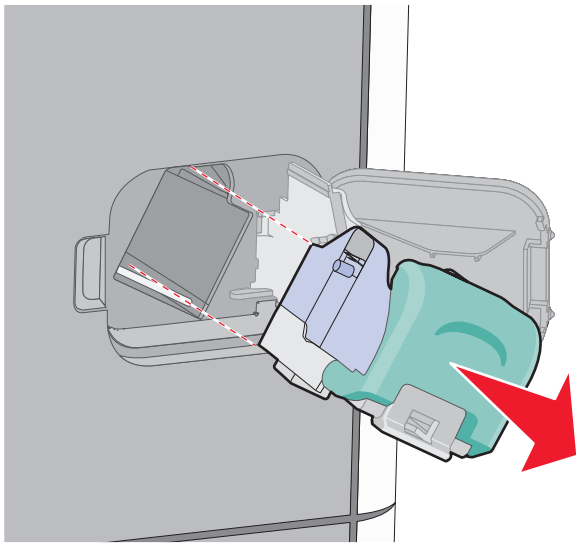

4 Use the metal tab to lift the staple guard, and then remove any loose staples.

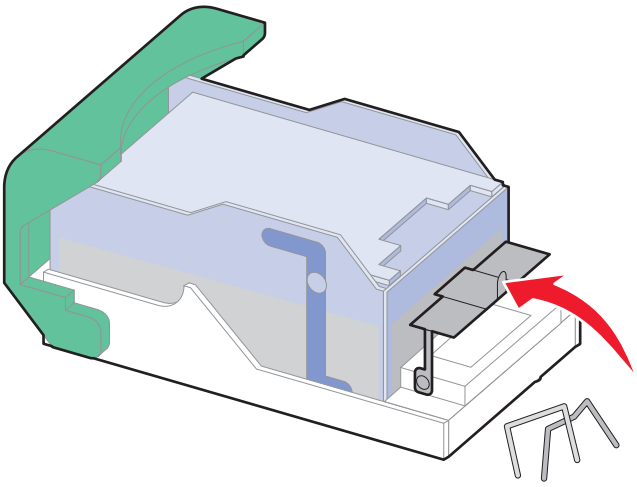

5 Close the staple guard.

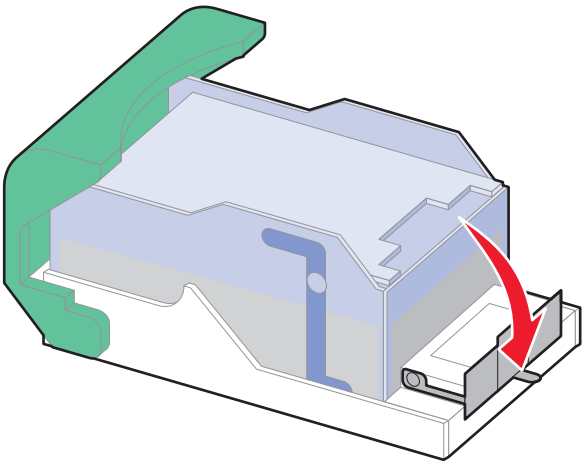

6 Press down on the staple guard until it *snaps* into place.

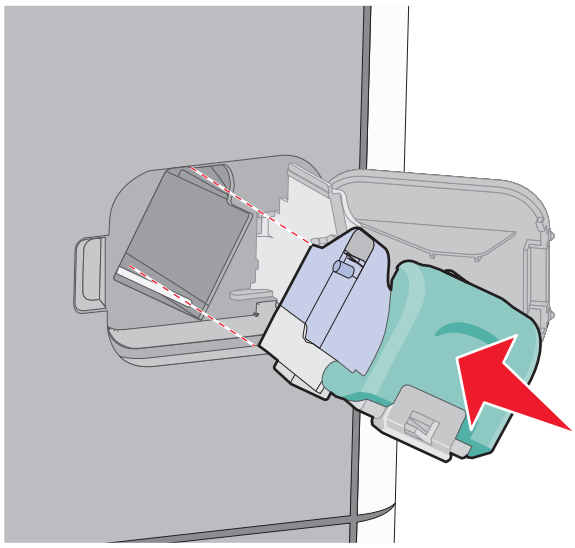

7 Push the cartridge holder firmly back into the stapler unit until the cartridge holder *clicks* into place.

8 Close the stapler door.

28y.xx error messages

Note: These errors are applicable only to the StapleSmart finisher. [y] represents the bin number.

Error code	Description	Action
28y.25	A software error has occurred with the output option. Ejector motor manager status is invalid.	Go to **"StapleSmart finisher software error service check" on page 154**.
28y.26	A software error has occurred with the output option. 1ms timer did not get serviced for an entire 1ms.	Go to **"StapleSmart finisher software error service check" on page 154**.
28y.27	A software error has occurred with the output option. Paddle motor manager status is invalid.	Go to **"StapleSmart finisher software error service check" on page 154**.
28y.28	A software error has occurred with the output option. Main motor manager status is invalid.	Go to **"StapleSmart finisher software error service check" on page 154**.
28y.29	The media reached the sensor (stapler pass through) but did not clear it in the specified time.	Go to **"Sensor (stapler pass through) lingering jam service check" on page 156**.
28y.30	A software error has occurred with the output option. Page ID is complete, but not clear.	Go to **"StapleSmart finisher software error service check" on page 154**.
28y.31	The finisher transport motor encoder is not detected upon startup.	Go to **"Motor (StapleSmart finisher transport) service check" on page 154**.
28y.32	The transport motor encoder detection is lost during normal operation.	Go to **"Motor (StapleSmart finisher transport) service check" on page 154**.
28y.33	The transport motor rotate at the specified time.	Go to **"Motor (StapleSmart finisher transport) service check" on page 154**.
28y.34	The transport motor rotate at the specified time.	Go to **"Motor (StapleSmart finisher transport) service check" on page 154**.
28y.35	The sensor (self priming) within the stapler assembly does not detect a ready staple in the specified time.	Go to **"Sensor (self priming) late failure service check" on page 158**.
28y.36	The stapler assembly has jammed while stapling or the stapler drive motor has failed.	
28y.37	A software error has occurred with the output option. Tamper motor manager status is invalid.	Go to **"StapleSmart finisher software error service check" on page 154**.
28y.38	The sensor (self priming) within the stapler assembly does not detect a ready staple in the specified time after the staple job was sent.	Go to **"Staple ready home position jam service check" on page 158**.
28y.39	The sensor (self priming) within the stapler assembly does not detect a ready staple in the specified time during mechanical reset.	

Error code	Description	Action
28y.40	The sensor (left tamper HP) does not detect that the tamper has moved from home position.	Go to **“Left tamper does not leave home position failure (StapleSmart finisher) service check” on page 159**.
28y.41	The sensor (left tamper HP) does not detect that the tamper has reached home position.	
28y.42	The sensor (right tamper HP) does not detect that the tamper has moved from home position.	Go to **“Right tamper does not leave home position failure (StapleSmart finisher) service check” on page 160**.
28y.43	The sensor (right tamper HP) does not detect that the tamper has reached home position.	
28y.44	The sensor (eject HP) does not detect that the eject mechanism is operating.	Go to **“Sensor (StapleSmart finisher eject HP) service check” on page 155**.
28y.45	The sensor (eject HP) does not detect the home position upon completion of normal media eject operation.	
28y.46	The sensor (paddle HP) does not detect that the paddle is operating.	Go to **“Paddle home position jam service check” on page 160**.
28y.47	The sensor (paddle HP) does not detect the home position upon completion of normal paddle operation.	
28y.48	The sensor (deflector gate HP) does not detect transition of the deflector gate to the output option.	Go to **“Deflector gate transition to output option not detected service check” on page 163**.
28y.49	The sensor (deflector gate HP) does not detect transition of the deflector gate to the standard bin.	Go to **“Deflector gate transition to standard bin not detected service check” on page 163**.
28y.50	The left tamper home position is not detected by the sensor (left tamper HP).	Go to **“Left tamper home position (StapleSmart finisher) jam service check” on page 161**.
28y.51	The right tamper home position is not detected by the sensor (right tamper HP).	Go to **“Right tamper home position (StapleSmart finisher) jam service check” on page 161**.
28y.52	A software error has occurred with the output option (paddle control motor timer error).	Go to **“StapleSmart finisher software error service check” on page 154**.
28y.53	The eject motor is not detected upon startup.	Go to **“Motor (StapleSmart finisher eject) service check” on page 154**.
28y.54	The eject motor encoder detection is lost during normal operation.	Go to **“Motor (StapleSmart finisher eject) service check” on page 154**.
28y.55	The eject motor rotate at the specified speed (overspeed failure).	Go to **“Motor (StapleSmart finisher eject) service check” on page 154**.
28y.56	The eject motor rotate at the specified speed (underspeed failure).	Go to **“Motor (StapleSmart finisher eject) service check” on page 154**.
28y.57	Media remains on the sensor (stapler pass through) during the warm up sequence.	Go to **“Sensor (stapler pass through) static jam service check” on page 157**.
28y.58	The media is late reaching the sensor (stapler pass through) within the specified time.	Go to **“Sensor (stapler pass through) late jam service check” on page 156**.

Error code	Description	Action
28y.59	The sensor (self priming) within the stapler assembly does not detect a ready staple in the specified time after the staple job was sent.	Go to **"Staple ready home position jam service check" on page 158**.
28y.60	A software error has occurred with the output option. The status of the stapler motor is not defined.	Go to **"StapleSmart finisher software error service check" on page 154**.
28y.61	A software error has occurred with the output option. DMID command is not received for 500ms after main motor runs.	Go to **"StapleSmart finisher software error service check" on page 154**.
28y.62	A software error has occurred with the output option. When the finishing job is not completed yet, the first DMID command of the next job is received.	Go to **"StapleSmart finisher software error service check" on page 154**.
28y.63	A software error has occurred with the output option (bin clamp motor control timer error).	Go to **"StapleSmart finisher software error service check" on page 154**.
28y.64	A software error has occurred with the output option (bin clamp motor control timer error during tray holder initial).	Go to **"StapleSmart finisher software error service check" on page 154**.
28y.65	The bin clamp home position is not detected by the sensor (bin clamp HP).	Go to **"StapleSmart finisher bin clamp service check" on page 155**.
28y.66	The sensor (bin clamp HP) does not detect that the bin clamp has moved from home position.	Go to **"StapleSmart finisher bin clamp service check" on page 155**.
28y.67	A software error has occurred with the output option (invalid bin clamp manager state).	Go to **"StapleSmart finisher software error service check" on page 154**.
28y.68	The sensor (self priming) within the stapler assembly does not detect a ready staple prior to a staple job.	Go to **"Staple ready home position jam service check" on page 158**.
28y.69	The sensor (self priming) within the stapler assembly does not detect a ready staple in the specified time after the staple job was sent.	
28y.70	The sensor (home signal) within the stapler assembly detected that the stapler mechanism was not in the home position before stapling.	Go to **"Stapler mechanism not in home position failure service check" on page 162**.
28y.71	The sensor (deflector gate HP) does not detect transition of the deflector gate to the standard bin.	Go to **"Deflector gate transition to standard bin not detected service check" on page 163**.
28y.72	Media remains on the sensor (media in stapler) during warm up sequence.	Go to **"Sensor (MFP stapler assembly media in stapler) service check" on page 155**.

StapleSmart finisher software error service check

Action	Yes	No
Step 1 Turn off the machine, and then turn it back on. Does the problem remain?	Go to step 2.	The problem is solved.
Step 2 Replace the StapleSmart finisher. Does the problem remain?	Contact the next level of support.	The problem is solved.

Motor (StapleSmart finisher transport) service check

Action	Yes	No
Step 1 Check all connections on the output option controller card, and if necessary, replace the connections. Does the problem remain?	Go to step 2.	The problem is solved.
Step 2 Replace the StapleSmart finisher. Does the problem remain?	Contact the next level of support.	The problem is solved.

Motor (StapleSmart finisher eject) service check

Action	Yes	No
Step 1 Check all connections on the output option controller card, and if necessary, replace the connections. Does the problem remain?	Go to step 2.	The problem is solved.
Step 2 Replace the StapleSmart finisher. Does the problem remain?	Contact the next level of support.	The problem is solved.

Sensor (StapleSmart finisher eject HP) service check

Action	Yes	No
Step 1 Check all connections on the output option controller card, and if necessary, replace the connections. Does the problem remain?	Go to step 2.	The problem is solved.
Step 2 Replace the StapleSmart finisher. Does the problem remain?	Contact the next level of support.	The problem is solved.

StapleSmart finisher bin clamp service check

Action	Yes	No
Step 1 Check all connections on the output option controller card, and if necessary, replace the connections. Does the problem remain?	Go to step 2.	The problem is solved.
Step 2 Replace the StapleSmart finisher. Does the problem remain?	Contact the next level of support.	The problem is solved.

Sensor (MFP stapler assembly media in stapler) service check

Action	Yes	No
Step 1 Inspect the sensor (media in stapler) for proper installation and damage. If necessary, remove and then reinstall the sensor. Does the problem remain?	Go to step 2.	The problem is solved.
Step 2 Replace the sensor (media in stapler). Go to **"Sensor (MFP stapler assembly media in stapler) removal" on page 502**. Does the problem remain?	Contact the next level of support.	The problem is solved.

Sensor (stapler pass through) late jam service check

Action	Yes	No
Step 1 Make sure that the output option is properly installed. Does the problem remain?	Go to step 2.	The problem is solved.
Step 2 Make sure that the media path between the base machine and the output option is free from any obstructions. Does the problem remain?	Go to step 3.	The problem is solved.
Step 3 Check the sensor (stapler pass through) for proper operation. **a** Enter the Diagnostics menu, and then navigate to: **Finisher sensor test** > **Sensor test** > **pass & media** **b** Observe the line item, “passthru.” Does the display on the operator panel change every time the sensing area of the sensor is interrupted or blocked?	Go to step 6.	Go to step 4.
Step 4 **a** Check the sensor (stapler pass through) for proper connection. **b** Replace the connection, if necessary. Does the problem remain?	Go to step 5.	The problem is solved.
Step 5 Replace the output option. Does the problem remain?	Contact the next level of support.	The problem is solved.

Sensor (stapler pass through) lingering jam service check

Action	Yes	No
Step 1 Make sure that the output option is properly installed. Does the problem remain?	Go to step 2.	The problem is solved.
Step 2 Make sure that the media path between the base machine and the output option is free from any obstructions. Does the problem remain?	Go to step 3.	The problem is solved.

Action	Yes	No
Step 3 Check the sensor (stapler pass through) for proper operation. **a** Enter the Diagnostics menu, and then navigate to: **Finisher sensor test** > **Sensor test** > **pass & media** **b** Observe the line item, “passthru.” Does the display on the operator panel change every time the sensing area of the sensor is interrupted or blocked?	Go to step 6.	Go to step 4.
Step 4 **a** Check the sensor (stapler pass through) for proper connection. **b** Replace the connection, if necessary. Does the problem remain?	Go to step 5.	The problem is solved.
Step 5 Replace the output option. Does the problem remain?	Contact the next level of support.	The problem is solved.

Sensor (stapler pass through) static jam service check

Action	Yes	No
Step 1 Make sure that the media path between the base machine and the output option is free from any obstructions. Does the problem remain?	Go to step 2.	The problem is solved.
Step 2 Check the sensor (stapler pass through) for proper operation. **a** Enter the Diagnostics menu, and then navigate to: **Finisher sensor test** > **Sensor test** > **pass & media** **b** Observe the line item, “passthru.” Does the display on the operator panel change every time the sensing area of the sensor is interrupted or blocked?	Go to step 5.	Go to step 3.
Step 3 **a** Check the sensor (stapler pass through) for proper connection. **b** Replace the connection, if necessary. Does the problem remain?	Go to step 4.	The problem is solved.
Step 4 Replace the output option. Does the problem remain?	Contact the next level of support.	The problem is solved.

Sensor (self priming) late failure service check

Action	Yes	No
Step 1 Check all the connections on the StapleSmart finisher controller card and the stapler assembly. Does the problem remain?	Go to step 2.	The problem is solved.
Step 2 **a** Remove the staple cartridge, and then remove all jammed staples. **b** Reinstall the staple cartridge. Does the problem remain?	Go to step 3.	The problem is solved.
Step 3 **a** Remove the stapler assembly. Go to **"MFP stapler assembly stapler unit assembly removal" on page 494**. **b** Manually rotate the drive gears, and then reset the stapler. **c** Reinstall the stapler assembly. Does the problem remain?	Go to step 4.	The problem is solved.
Step 4 Replace the stapler assembly. Go to **"MFP stapler assembly stapler unit assembly removal" on page 494**. Does the problem remain?	Contact the next level of support.	The problem is solved.

Staple ready home position jam service check

Action	Yes	No
Step 1 Check all the connections on the StapleSmart finisher controller card and the stapler assembly. Does the problem remain?	Go to step 2.	The problem is solved.
Step 2 **a** Remove the staple cartridge, and then remove all jammed staples. **b** Reinstall the staple cartridge. Does the problem remain?	Go to step 3.	The problem is solved.

Action	Yes	No
Step 3 **a** Remove the stapler assembly. Go to **"MFP stapler assembly stapler unit assembly removal" on page 494**. **b** Manually rotate the drive gears, and then reset the stapler. **c** Remove all jammed staples, and then reinstall the stapler assembly. Does the problem remain?	Go to step 4.	The problem is solved.
Step 4 Replace the stapler assembly. Go to **"MFP stapler assembly stapler unit assembly removal" on page 494**. Does the problem remain?	Contact the next level of support.	The problem is solved.

Left tamper does not leave home position failure (StapleSmart finisher) service check

Action	Yes	No
Step 1 Check all the connections on the output option controller card. Does the problem remain?	Go to step 2.	The problem is solved.
Step 2 Check the tamper drive belt for damage, and if necessary, replace the belt. Does the problem remain?	Go to step 3.	The problem is solved.
Step 3 Replace the left tamper motor assembly. Go to **"MFP stapler assembly tamper drive motor assembly removal" on page 492**. Does the problem remain?	Go to step 4.	The problem is solved.
Step 4 Replace the sensor (tamper HP). Go to **"Sensor (MFP stapler assembly tamper HP left and right) removal" on page 498**. Does the problem remain?	Go to step 5.	The problem is solved.
Step 5 Replace the output option. Does the problem remain?	Contact the next level of support.	The problem is solved.

Right tamper does not leave home position failure (StapleSmart finisher) service check

Action	Yes	No
Step 1 Check all the connections on the output option controller card. Does the problem remain?	Go to step 2.	The problem is solved.
Step 2 Check the tamper drive belt for damage, and if necessary, replace the belt. Does the problem remain?	Go to step 3.	The problem is solved.
Step 3 Replace the right tamper motor assembly. Go to **"MFP stapler assembly tamper drive motor assembly removal" on page 492**. Does the problem remain?	Go to step 4.	The problem is solved.
Step 4 Replace the sensor (tamper HP). Go to **"Sensor (MFP stapler assembly tamper HP left and right) removal" on page 498**. Does the problem remain?	Go to step 5.	The problem is solved.
Step 5 Replace the output option. Does the problem remain?	Contact the next level of support.	The problem is solved.

Paddle home position jam service check

Action	Yes	No
Step 1 Check all the connections on the StapleSmart finisher controller card. Does the problem remain?	Go to step 2.	The problem is solved.
Step 2 Check the sensor (paddle HP) for damage, and if necessary, replace the sensor. Go to **"Sensor (MFP stapler assembly paddle HP) removal" on page 497**. Does the problem remain?	Go to step 3.	The problem is solved.
Step 3 Replace the output option. Does the problem remain?	Contact the next level of support.	The problem is solved.

Left tamper home position (StapleSmart finisher) jam service check

Action	Yes	No
Step 1 Check all the connections on the output option controller card. Does the problem remain?	Go to step 2.	The problem is solved.
Step 2 Check the tamper drive belt for damage, and if necessary, replace the belt. Does the problem remain?	Go to step 3.	The problem is solved.
Step 3 Replace the left tamper motor assembly. Go to **"MFP stapler assembly tamper drive motor assembly removal" on page 492**. Does the problem remain?	Go to step 4.	The problem is solved.
Step 4 Replace the sensor (tamper HP). Go to **"Sensor (MFP stapler assembly tamper HP left and right) removal" on page 498**. Does the problem remain?	Go to step 5.	The problem is solved.
Step 5 Replace the output option. Does the problem remain?	Contact the next level of support.	The problem is solved.

Right tamper home position (StapleSmart finisher) jam service check

Action	Yes	No
Step 1 Check all the connections on the output option controller card. Does the problem remain?	Go to step 2.	The problem is solved.
Step 2 Check the tamper drive belt for damage, and if necessary, replace the belt. Does the problem remain?	Go to step 3.	The problem is solved.
Step 3 Replace the right tamper motor assembly. Go to **"MFP stapler assembly tamper drive motor assembly removal" on page 492**. Does the problem remain?	Go to step 4.	The problem is solved.

Action	Yes	No
Step 4 Replace the sensor (tamper HP). Go to **"Sensor (MFP stapler assembly tamper HP left and right) removal" on page 498**. Does the problem remain?	Go to step 5.	The problem is solved.
Step 5 Replace the output option. Does the problem remain?	Contact the next level of support.	The problem is solved.

Stapler mechanism not in home position failure service check

Action	Yes	No
Step 1 Check all the connections on the StapleSmart finisher controller card and the stapler assembly. Does the problem remain?	Go to step 2.	The problem is solved.
Step 2 **a** Remove the staple cartridge, and then remove all jammed staples. **b** Reinstall the staple cartridge. Does the problem remain?	Go to step 3.	The problem is solved.
Step 3 **a** Remove the stapler assembly. Go to **"MFP stapler assembly stapler unit assembly removal" on page 494**. **b** Manually rotate the drive gears, and then reset the stapler. **c** Remove all jammed staples, and then reinstall the stapler assembly. Does the problem remain?	Go to step 4.	The problem is solved.
Step 4 Replace the stapler assembly. Go to **"MFP stapler assembly stapler unit assembly removal" on page 494**. Does the problem remain?	Contact the next level of support.	The problem is solved.

Deflector gate transition to output option not detected service check

Action	Yes	No
Step 1 Check all the connections on the StapleSmart finisher controller card. Does the problem remain?	Go to step 2.	The problem is solved.
Step 2 Check the sensor (deflector HP) for damage, and if necessary, replace the sensor. Go to **"Sensor (MFP stapler assembly deflector HP) removal" on page 503**. Does the problem remain?	Go to step 3.	The problem is solved.
Step 3 Replace the output option. Does the problem remain?	Contact the next level of support.	The problem is solved.

Deflector gate transition to standard bin not detected service check

Action	Yes	No
Step 1 Check all the connections on the StapleSmart finisher controller card. Does the problem remain?	Go to step 2.	The problem is solved.
Step 2 Check the sensor (deflector HP) for damage, and if necessary, replace the sensor. Go to **"Sensor (MFP stapler assembly deflector HP) removal" on page 503**. Does the problem remain?	Go to step 3.	The problem is solved.
Step 3 Replace the output option. Does the problem remain?	Contact the next level of support.	The problem is solved.

29y paper jams

290–294 paper jams

1 Remove all original documents from the ADF.

2 Open the ADF cover, and then remove any jammed paper.

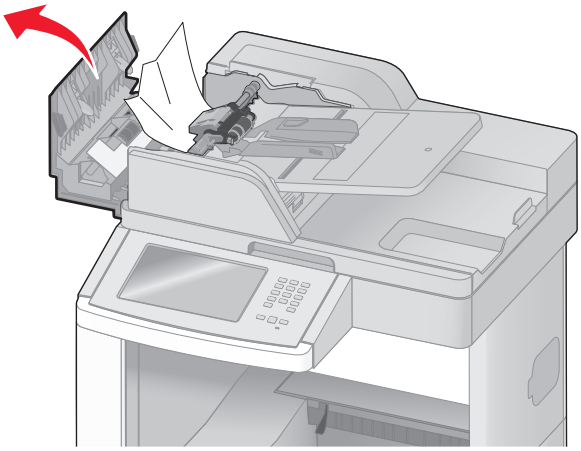

3 Close the ADF cover.

4 Open the scanner cover, and then remove any jammed pages.

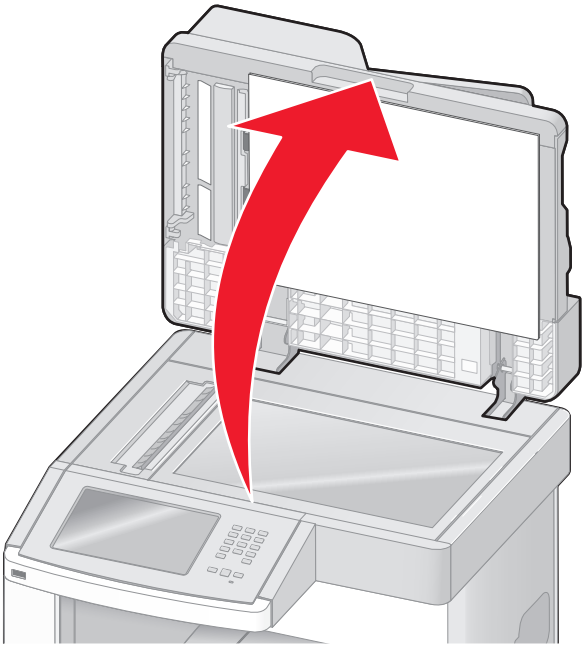

5 Open the bottom ADF door, and then remove any jammed pages.

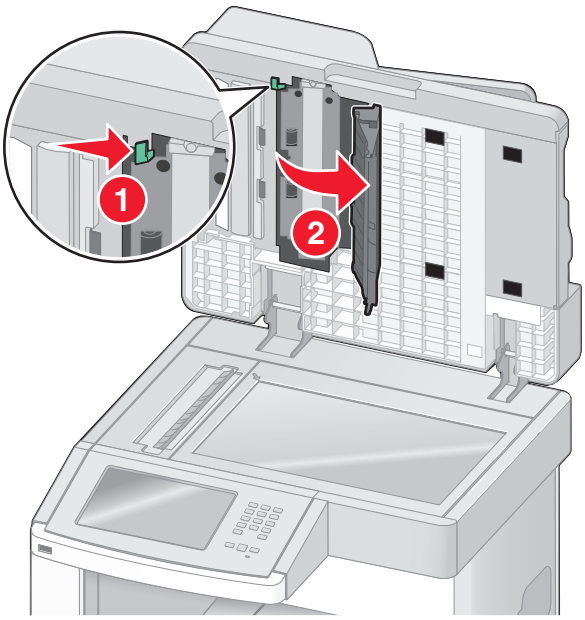

6 Close the bottom ADF door and scanner cover.

7 Touch **Restart Job**.

29y.xx error messages

Error code	Description	Action
290.00	Media remains on the sensor (ADF sheet through) during the warm up sequence.	Go to **"Sensor (ADF sheet through) static jam service check" on page 167**.
290.01	The media does not reach the sensor (ADF sheet through) within the specified time.	Go to **"Sensor (ADF sheet through) late jam service check 290.01" on page 168**.
290.02	The media does not reach the sensor (ADF 1st scan) within the specified time.	Go to **"Sensor (ADF 1st scan) late jam service check" on page 172**.
290.03	The media reached the sensor (ADF sheet through) but did not clear it within the specified time.	Go to **"Sensor (ADF sheet through) lingering jam service check" on page 170**.
290.10	Media remains on the sensor (ADF 1st scan) during the warm up sequence.	Go to **"Sensor (ADF 1st scan) static jam service check" on page 173**.
291.00	Media remains on the sensor (ADF 2nd scan) during the warm up sequence.	Go to **"Sensor (ADF 2nd scan) static jam service check" on page 174**.
291.01	The media does not reach the sensor (ADF 2nd scan) within the specified time.	Go to **"Sensor (ADF 2nd scan) late jam service check" on page 177**.
291.02	The media does not reach the sensor (ADF media exit) within the specified time.	Go to **"Sensor (ADF media exit) late jam service check" on page 181**.
292.00	The ADF top door assembly was opened while the ADF was operating.	Go to **"ADF top door open jam service check" on page 178**.
293.00	The media is removed from the ADF once the feed process is initiated.	Go to **"Media missing jam service check" on page 179**.

Error code	Description	Action
294.00	Media remains on the sensor (ADF media exit) during the warm up sequence.	Go to **"Sensor (ADF media exit) static jam service check" on page 180**.
294.01	The media reached the sensor (ADF media exit) within the specified time but did not clear it within the specified time.	Go to **"Sensor (ADF media exit) lingering jam service check" on page 182**.
294.03		

Sensor (ADF top door interlock) service check

Action	Yes	No
Step 1 Check the sensor (ADF top door interlock) for proper operation. **a** Enter the Diagnostics menu. **b** Select **SCANNER TESTS** > **Sensor Tests**. **c** Observe the line, "sensor (ADF top door interlock)." Does the display on the operator panel change every time the sensing area of the sensor is interrupted or blocked?	The problem is solved.	Go to step 2.
Step 2 **a** Check the sensor (ADF top door interlock) for proper connection. **b** Replace the connection, if necessary. Does the problem remain?	Go to step 3.	The problem is solved.
Step 3 Replace the sensor (ADF top door interlock). Go to **"Sensor (ADF top door interlock) removal" on page 554**. Does the problem remain?	Contact the next level of support.	The problem is solved.

Switch (ADF closed interlock) service check

Action	Yes	No
Step 1 Check the sensor (ADF closed interlock) for proper operation. **a** Enter the Diagnostics menu. **b** Select **SCANNER TESTS** > **Sensor Tests**. **c** Observe the line, "sensor (ADF closed interlock)." Does the display on the operator panel change every time the sensing area of the sensor is interrupted or blocked?	The problem is solved.	Go to step 2.

Action	Yes	No
Step 2 **a** Check the sensor (ADF closed interlock) for proper connection. **b** Replace the connection, if necessary. Does the problem remain?	Go to step 3.	The problem is solved.
Step 3 Replace the sensor (ADF closed interlock). Go to **"Switch (ADF closed interlock) removal" on page 559**. Does the problem remain?	Contact the next level of support.	The problem is solved.

Sensor (ADF sheet through) static jam service check

Action	Yes	No
Step 1 Check the media path, and then remove any media or media fragments. Does the problem remain?	Go to step 2.	The problem is solved.
Step 2 Check the sensor (ADF sheet through) for proper operation. **a** Enter the Diagnostics menu. **b** Select **SCANNER TESTS** > **Sensor Tests**. **c** Observe the line, "sensor (ADF sheet through)." Does the display on the operator panel change every time the sensing area of the sensor is interrupted or blocked?	Go to step 5.	Go to step 3.
Step 3 **a** Check the sensor (ADF sheet through) for proper connection. **b** Replace the connection, if necessary. Does the problem remain?	Go to step 4.	The problem is solved.
Step 4 Replace the sensor. Go to **"Sensor (ADF sheet through) removal" on page 557**. Does the problem remain?	Go to step 5.	The problem is solved.
Step 5 Place an undamaged document in the ADF, and then perform an ADF test. Does the problem remain?	Go to step 6.	The problem is solved.

Action	Yes	No
Step 6 Replace the ADF controller card assembly. Go to **"ADF controller card removal" on page 541**. Does the problem remain?	Go to step 7.	The problem is solved.
Step 7 Perform a print test using the ADF. Does the problem remain?	Contact the next level of support.	The problem is solved.

Sensor (ADF sheet through) late jam service check 290.01

Action	Yes	No
Step 1 **a** Check if the original document is free of paper clips and staples as well as creases, tears, holes, or excessive wear. **b** If the original document is damaged, replace it, and then perform an ADF test. Does the problem remain?	Go to step 2.	The problem is solved.
Step 2 **a** Check the ADF feed/pick roll assembly or the ADF separation roll assembly for any wear or gear damage. **b** If necessary, clean or replace the ADF feed/pick roll assembly or the ADF separation roll assembly. Go to **"ADF feed/pick roll assembly removal" on page 534** or **"ADF separator torque limiter assembly removal" on page 536**. Does the problem remain?	Go to step 3.	The problem is solved.
Step 3 Check the media path for contaminates. Make sure that the media path is free of excess media dust and foreign objects such as paper clips and staples. Does the problem remain?	Go to step 4.	The problem is solved.
Step 4 **a** Check the ADF feed drive motor assembly for proper connection. **b** Replace the connection, if necessary. Does the problem remain?	Go to step 5.	The problem is solved.

Action	Yes	No
Step 5 Replace the ADF feed drive motor assembly. Go to **"ADF feed drive motor assembly removal" on page 551**. Does the problem remain?	Go to step 6.	The problem is solved.
Step 6 Check the sensor (ADF sheet through) for proper operation. **a** Enter the Diagnostics menu. **b** Select **SCANNER TESTS** > **Sensor Tests**. **c** Observe the line, "sensor (ADF sheet through)." Does the display on the operator panel change every time the sensing area of the sensor is interrupted or blocked?	Go to step 9.	Go to step 7.
Step 7 **a** Check the sensor (ADF sheet through) for proper connection. **b** Replace the connection, if necessary. Does the problem remain?	Go to step 8.	The problem is solved.
Step 8 Replace the sensor. Go to **"Sensor (ADF sheet through) removal" on page 557**. Does the problem remain?	Go to step 9.	The problem is solved.
Step 9 Place an undamaged document in the ADF, and then perform an ADF test. Does the problem remain?	Go to step 10.	The problem is solved.
Step 10 Replace the ADF controller card assembly. Go to **"ADF controller card removal" on page 541**. Does the problem remain?	Go to step 11.	The problem is solved.
Step 11 Perform a print test using the ADF. Does the problem remain?	Contact the next level of support.	The problem is solved.

Sensor (ADF sheet through) lingering jam service check

Action	Yes	No
Step 1 Check the media size setup and tray guides for the ADF. • Make sure that the media size matches the size set for the ADF. • If necessary, replace the media, or change the media size setup. Does the problem remain?	Go to step 2.	The problem is solved.
Step 2 **a** Check if the original document is free of paper clips and staples as well as creases, tears, holes, or excessive wear. **b** If the original document is damaged, replace it, and then perform an ADF test. Does the problem remain?	Go to step 3.	The problem is solved.
Step 3 Check the media path for contaminates. Make sure that the media path is free of excess media dust and foreign objects such as paper clips and staples. Does the problem remain?	Go to step 4.	The problem is solved.
Step 4 Check the sensor (ADF sheet through) for proper operation. **a** Enter the Diagnostics menu. **b** Select **SCANNER TESTS** > **Sensor Tests**. **c** Observe the line, “sensor (ADF sheet through).” Does the display on the operator panel change every time the sensing area of the sensor is interrupted or blocked?	Go to step 7.	Go to step 5.
Step 5 **a** Check the sensor (ADF sheet through) for proper connection. **b** Replace the connection, if necessary. Does the problem remain?	Go to step 6.	The problem is solved.
Step 6 Replace the sensor (ADF sheet through). Go to **“Sensor (ADF sheet through) removal” on page 557**. Does the problem remain?	Go to step 7.	The problem is solved.

Action	Yes	No
Step 7 **a** Check the ADF feed drive motor assembly for proper connection. **b** Replace the connection, if necessary. Does the problem remain?	Go to step 8.	The problem is solved.
Step 8 Replace the ADF feed drive motor assembly. Go to **"ADF feed drive motor assembly removal" on page 551**. Does the problem remain?	Go to step 9.	The problem is solved.
Step 9 **a** Check the ADF transport drive motor assembly for proper connection. **b** Replace the connection, if necessary.	Go to step 10.	The problem is solved.
Step 10 Replace the ADF transport drive motor assembly. Go to **"ADF transport drive motor bracket assembly with cable removal" on page 550**. Does the problem remain?	Go to step 11.	The problem is solved.
Step 11 Place an undamaged document in the ADF, and then perform an ADF test. Does the problem remain?	Go to step 12.	The problem is solved.
Step 12 Replace the ADF controller card assembly. Go to **"ADF controller card removal" on page 541**. Does the problem remain?	Go to step 13.	The problem is solved.
Step 13 Perform a print test using the ADF. Does the problem remain?	Contact the next level of support.	The problem is solved.

Sensor (ADF 1st scan) late jam service check

Action	Yes	No
Step 1 **a** Check if the original document is free of paper clips and staples as well as creases, tears, holes, or excessive wear. **b** If the original document is damaged, replace it, and then perform an ADF test. Does the problem remain?	Go to step 2.	The problem is solved.
Step 2 **a** Check the ADF rolls for wear. **b** If necessary, clean or replace the ADF pick/feed roll assembly or the ADF separation roll assembly. Go to **"ADF feed/pick roll assembly removal" on page 534** or **"ADF separator torque limiter assembly removal" on page 536**. Does the problem remain?	Go to step 3.	The problem is solved.
Step 3 Check the media path for contaminates. Make sure that the media path is free of excess media dust and foreign objects such as paper clips and staples. Does the problem remain?	Go to step 4.	The problem is solved.
Step 4 Check the sensor (ADF 1st scan) for proper operation. **a** Enter the Diagnostics menu. **b** Select **SCANNER TESTS** > **Sensor Tests**. **c** Observe the line, "sensor (ADF 1st scan)." Does the display on the operator panel change every time the sensing area of the sensor is interrupted or blocked?	Go to step 7.	Go to step 5.
Step 5 **a** Check the sensor (ADF 1st scan) for proper connection. **b** Replace the connection, if necessary. Does the problem remain?	Go to step 6.	The problem is solved.
Step 6 Replace the sensor (ADF 1st scan). Go to **"Sensor (ADF 1st scan) removal" on page 556**. Does the problem remain?	Go to step 7.	The problem is solved.

Action	Yes	No
Step 7 **a** Check the ADF feed drive motor assembly for proper connection. **b** Replace the connection, if necessary. Does the problem remain?	Go to step 8.	The problem is solved.
Step 8 Replace the ADF feed drive motor assembly. Go to **"ADF feed drive motor assembly removal" on page 551**. Does the problem remain?	Go to step 9.	The problem is solved.
Step 9 Place an undamaged document in the ADF, and then perform an ADF test. Does the problem remain?	Go to step 10.	The problem is solved.
Step 10 Replace the ADF controller card assembly. Go to **"ADF controller card removal" on page 541**. Does the problem remain?	Go to step 11.	The problem is solved.
Step 11 Perform a print test using the ADF. Does the problem remain?	Contact the next level of support.	The problem is solved.

Sensor (ADF 1st scan) static jam service check

Action	Yes	No
Step 1 Check and remove any media or media fragments from the media path. Does the problem remain?	Go to step 2.	The problem is solved.
Step 2 Check the sensor (ADF 1st scan) for proper operation. **a** Enter the Diagnostics menu. **b** Select **SCANNER TESTS** > **Sensor Tests**. **c** Observe the line, "sensor (ADF 1st scan)." Does the display on the operator panel change every time the sensing area of the sensor is interrupted or blocked?	Go to step 5.	Go to step 3.

Action	Yes	No
Step 3 **a** Check the sensor (ADF 1st scan) for proper connection. **b** Replace the connection, if necessary. Does the problem remain?	Go to step 4.	The problem is solved.
Step 4 Replace the sensor (ADF 1st scan). Go to **"Sensor (ADF 1st scan) removal" on page 556**. Does the problem remain?	Go to step 5.	The problem is solved.
Step 5 Place an undamaged document in the ADF, and then perform an ADF test. Does the problem remain?	Go to step 6.	The problem is solved.
Step 6 Replace the ADF controller card assembly. Go to **"ADF controller card removal" on page 541**. Does the problem remain?	Go to step 7.	The problem is solved.
Step 7 Perform a print test using the ADF. Does the problem remain?	Contact the next level of support.	The problem is solved.

Sensor (ADF 2nd scan) static jam service check

Action	Yes	No
Step 1 Check and remove any media or media fragments from the media path. Does the problem remain?	Go to step 2.	The problem is solved.
Step 2 Check the sensor (ADF 1st scan) for proper operation. **a** Enter the Diagnostics menu. **b** Select **SCANNER TESTS** > **Sensor Tests**. **c** Observe the line, "sensor (ADF 2nd scan)." Does the display on the operator panel change every time the sensing area of the sensor is interrupted or blocked?	Go to step 5.	Go to step 3.

Action	Yes	No
Step 3 **a** Check the sensor (ADF 2nd scan) for proper connection. **b** Replace the connection, if necessary. Does the problem remain?	Go to step 4.	The problem is solved.
Step 4 Replace the sensor (ADF 2nd scan). Go to **"Sensor (ADF 2nd scan) removal" on page 555**. Does the problem remain?	Go to step 5.	The problem is solved.
Step 5 Place an undamaged document in the ADF, and then perform an ADF test. Does the problem remain?	Go to step 6.	The problem is solved.
Step 6 Replace the ADF controller card assembly. Go to **"ADF controller card removal" on page 541**. Does the problem remain?	Go to step 7.	The problem is solved.
Step 7 Perform a print test using the ADF. Does the problem remain?	Contact the next level of support.	The problem is solved.

Sensor (ADF 2nd scan) lingering jam service check

Action	Yes	No
Step 1 Check the media size setup and tray guides for the ADF. • Make sure that the media size matches the size set for the ADF. • If necessary, replace the media, or change the media size setup. Does the problem remain?	Go to step 2.	The problem is solved.
Step 2 **a** Check if the original document is free of paper clips and staples as well as creases, tears, holes, or excessive wear. **b** If the original document is damaged, replace it, and then perform an ADF test. Does the problem remain?	Go to step 3.	The problem is solved.

Action	Yes	No
Step 3 Check the media path for contaminates. Make sure that the media path is free of excess media dust and foreign objects such as paper clips and staples. Does the problem remain?	Go to step 4.	The problem is solved.
Step 4 Check the sensor (ADF 2nd scan) for proper operation. **a** Enter the Diagnostics menu. **b** Select **SCANNER TESTS** > **Sensor Tests**. **c** Observe the line, "sensor (ADF 2nd scan)." Does the display on the operator panel change every time the sensing area of the sensor is interrupted or blocked?	Go to step 7.	Go to step 5.
Step 5 **a** Check the sensor (ADF 2nd scan) for proper connection. **b** Replace the connection, if necessary. Does the problem remain?	Go to step 6.	The problem is solved.
Step 6 Replace the sensor (ADF 2nd scan). Go to **"Sensor (ADF 2nd scan) removal" on page 555**. Does the problem remain?	Go to step 7.	The problem is solved.
Step 7 **a** Check the ADF transport drive motor assembly for proper connection. **b** Replace the connection, if necessary. Does the problem remain?	Go to step 8.	The problem is solved.
Step 8 Replace the ADF transport drive motor assembly. Go to **"ADF transport drive motor bracket assembly with cable removal" on page 550**. Does the problem remain?	Go to step 9.	The problem is solved.
Step 9 Place an undamaged document in the ADF, and then perform an ADF test. Does the problem remain?	Go to step 10.	The problem is solved.

Action	Yes	No
Step 10 Replace the ADF controller card assembly. Go to **“ADF controller card removal” on page 541**. Does the problem remain?	Go to step 11.	The problem is solved.
Step 11 Perform a print test using the ADF. Does the problem remain?	Contact the next level of support.	The problem is solved.

Sensor (ADF 2nd scan) late jam service check

Action	Yes	No
Step 1 **a** Check the sensor (ADF 2nd scan) for proper installation. **b** If necessary, remove and then reinstall the sensor. Does the problem remain?	Go to step 2.	The problem is solved.
Step 2 Check the sensor (ADF 2nd scan) for proper operation. **a** Enter the Diagnostics menu. **b** Select **Scanner tests** > **Sensor tests**. **c** Observe the line, “sensor (ADF 2nd scan).” Does the display on the operator panel change every time the sensing area of the sensor is interrupted or blocked?	The problem is solved.	Go to step 3.
Step 3 **a** Check the sensor (ADF 2nd scan) for proper connection. **b** Replace the connection, if necessary. Does the problem remain?	Go to step 4.	The problem is solved.
Step 4 Replace the sensor (ADF 2nd scan). Go to **“Sensor (ADF 2nd scan) removal” on page 555**. Does the problem remain?	Contact the next level of support.	The problem is solved.

ADF top door open jam service check

Action	Yes	No
Step 1 **a** Remove all documents from the ADF. **b** Place an undamaged document in the ADF, and then perform an ADF test. Does the problem remain?	Go to step 2.	The problem is solved.
Step 2 Check the sensor (ADF top door interlock) for proper operation. **a** Enter the Diagnostics menu. **b** Select **SCANNER TESTS** > **Sensor Tests**. **c** Observe the line, "sensor (ADF top door interlock)." Does the display on the operator panel change every time the sensing area of the sensor is interrupted or blocked?	Go to step 5.	Go to step 3.
Step 3 **a** Check the sensor (ADF top door interlock) for proper connection. **b** Replace the connection, if necessary. Does the problem remain?	Go to step 4.	The problem is solved.
Step 4 Replace the sensor (ADF top door interlock). Go to **"Sensor (ADF top door interlock) removal" on page 554**. Does the problem remain?	Go to step 5.	The problem is solved.
Step 5 Place an undamaged document in the ADF, and then perform an ADF test. Does the problem remain?	Go to step 6.	The problem is solved.
Step 6 Replace the ADF controller card assembly. Go to **"ADF controller card removal" on page 541**. Does the problem remain?	Go to step 7.	The problem is solved.
Step 7 Perform a print test using the ADF. Does the problem remain?	Contact the next level of support.	The problem is solved.

Media missing jam service check

Action	Yes	No
Step 1 **a** Remove all documents from the ADF. **b** Place an undamaged document in the ADF, and then perform an ADF test. Does the problem remain?	Go to step 2.	The problem is solved.
Step 2 Check the sensor (ADF document set) for proper operation. **a** Enter the Diagnostics menu. **b** Select **SCANNER TESTS** > **Sensor Tests**. **c** Observe the line, "sensor (ADF document set)." Does the display on the operator panel change every time the sensing area of the sensor is interrupted or blocked?	Go to step 5.	Go to step 3.
Step 3 **a** Check the sensor (ADF document set) for proper connection. **b** Replace the connection, if necessary. Does the problem remain?	Go to step 4.	The problem is solved.
Step 4 Replace the sensor (ADF document set). Go to **"Sensor (ADF document set) removal" on page 558**. Does the problem remain?	Go to step 5.	The problem is solved.
Step 5 Place an undamaged document in the ADF, and then perform an ADF test. Does the problem remain?	Go to step 6.	The problem is solved.
Step 6 Replace the ADF controller card assembly. Go to **"ADF controller card removal" on page 541**. Does the problem remain?	Go to step 7.	The problem is solved.
Step 7 Perform a print test using the ADF. Does the problem remain?	Contact the next level of support.	The problem is solved.

Sensor (ADF media exit) static jam service check

Action	Yes	No
Step 1 Check and remove any media or media fragments from the media path. Does the problem remain?	Go to step 2.	The problem is solved.
Step 2 Check the sensor (ADF media exit) for proper operation. **a** Enter the Diagnostics menu. **b** Select **SCANNER TESTS** > **Sensor Tests**. **c** Observe the line, "sensor (ADF media exit)." Does the display on the operator panel change every time the sensing area of the sensor is interrupted or blocked?	Go to step 5.	Go to step 3.
Step 3 **a** Check the sensor (ADF media exit) for proper connection. **b** Replace the connection, if necessary. Does the problem remain?	Go to step 4.	The problem is solved.
Step 4 Replace the sensor (ADF media exit). Go to **"Sensor (standard exit bin) actuator assembly removal" on page 384** or **"Sensor (ADF media exit) bracket assembly removal (model X651)" on page 549**. Does the problem remain?	Go to step 5.	The problem is solved.
Step 5 Place an undamaged document in the ADF, and then perform an ADF test. Does the problem remain?	Go to step 6.	The problem is solved.
Step 6 Replace the ADF controller card assembly. Go to **"ADF controller card removal" on page 541**. Does the problem remain?	Go to step 7.	The problem is solved.
Step 7 Perform a print test using the ADF. Does the problem remain?	Contact the next level of support.	The problem is solved.

Sensor (ADF media exit) late jam service check

Action	Yes	No
Step 1 **a** Check if the original document is free of paper clips and staples as well as creases, tears, holes, or excessive wear. **b** If the original document is damaged, replace it, and then perform an ADF test. Does the problem remain?	Go to step 2.	The problem is solved.
Step 2 Check the ADF rolls for wear, and if necessary, replace the ADF rolls. Go to **"ADF feed/pick roll assembly removal" on page 534** or **"ADF separator torque limiter assembly removal" on page 536**. Does the problem remain?	Go to step 3.	The problem is solved.
Step 3 Check the media path for contaminates. Make sure that the media path is free of excess media dust and foreign objects such as paper clips and staples. Does the problem remain?	Go to step 4.	The problem is solved.
Step 4 Check the sensor (ADF media exit) for proper operation. **a** Enter the Diagnostics menu. **b** Select **SCANNER TESTS** > **Sensor Tests**. **c** Observe the line, "sensor (ADF media exit)." Does the display on the operator panel change every time the sensing area of the sensor is interrupted or blocked?	Go to step 6.	Go to step 5.
Step 5 **a** Check the sensor (ADF media exit) for proper connection. **b** Replace the connection, if necessary. Does the problem remain?	Go to step 6.	The problem is solved.
Step 6 Replace the sensor (ADF media exit). Go to **"Sensor (standard exit bin) actuator assembly removal" on page 384** or **"Sensor (ADF media exit) bracket assembly removal (model X651)" on page 549**. Does the problem remain?	Go to step 7.	The problem is solved.

Action	Yes	No
Step 7 **a** Check the ADF transport drive motor assembly for proper connection. **b** Replace the connection, if necessary. Does the problem remain?	Go to step 8.	The problem is solved.
Step 8 Replace the ADF transport drive motor assembly. Go to **"ADF transport drive motor bracket assembly with cable removal" on page 550**. Does the problem remain?	Go to step 9.	The problem is solved.
Step 9 Place an undamaged document in the ADF, and then perform an ADF test. Does the problem remain?	Go to step 10.	The problem is solved.
Step 10 Replace the ADF controller card assembly. Go to **"ADF controller card removal" on page 541**. Does the problem remain?	Go to step 11.	The problem is solved.
Step 11 Perform a print test using the ADF. Does the problem remain?	Contact the next level of support.	The problem is solved.

Sensor (ADF media exit) lingering jam service check

Action	Yes	No
Step 1 **a** Check if the original document is free of paper clips and staples as well as creases, tears, holes, or excessive wear. **b** If the original document is damaged, replace it, and then perform an ADF test. Does the problem remain?	Go to step 2.	The problem is solved.
Step 2 Check the ADF rolls for wear, and if necessary, replace the ADF rolls. Go to **"ADF feed/pick roll assembly removal" on page 534** or **"ADF separator torque limiter assembly removal" on page 536**. Does the problem remain?	Go to step 3.	The problem is solved.

Action	Yes	No
Step 3 Check the media path for contaminates. Make sure that the media path is free of excess media dust and foreign objects such as paper clips and staples. Does the problem remain?	Go to step 4.	The problem is solved.
Step 4 Check the sensor (ADF media exit) for proper operation. **a** Enter the Diagnostics menu. **b** Select **SCANNER TESTS** > **Sensor Tests**. **c** Observe the line, "sensor (ADF media exit)." Does the display on the operator panel change every time the sensing area of the sensor is interrupted or blocked?	Go to step 7.	Go to step 5.
Step 5 **a** Check the sensor (ADF media exit) for proper connection. **b** Replace the connection, if necessary. Does the problem remain?	Go to step 6.	The problem is solved.
Step 6 Replace the sensor (ADF media exit). Go to **"Sensor (standard exit bin) actuator assembly removal" on page 384** or **"Sensor (ADF media exit) bracket assembly removal (model X651)" on page 549**. Does the problem remain?	Go to step 7.	The problem is solved.
Step 7 **a** Check the ADF transport drive motor assembly for proper connection. **b** Replace the connection, if necessary. Does the problem remain?	Go to step 8.	The problem is solved.
Step 8 Replace the ADF transport drive motor assembly. Go to **"ADF transport drive motor bracket assembly with cable removal" on page 550**. Does the problem remain?	Go to step 9.	The problem is solved.
Step 9 Place an undamaged document in the ADF, and then perform an ADF test. Does the problem remain?	Go to step 10.	The problem is solved.

Action	Yes	No
Step 10 Replace the ADF controller card assembly. Go to **"ADF controller card removal" on page 541**. Does the problem remain?	Go to step 11.	The problem is solved.
Step 11 Perform a print test using the ADF. Does the problem remain?	Contact the next level of support.	The problem is solved.

List of status and error messages

Answering

The printer is answering a fax call. Wait for the message to clear.

Busy

Wait for the message to clear.

Call complete

A fax call is completed. Wait for the message to clear.

Change <src> to <x>

<src> is a tray or feeder, and <x> is a paper size or type.

You can change the current paper source for the remainder of the print job. The formatted page will print on the paper loaded in the selected tray. This may cause clipping of text or images. Try one or more of the following:

- Select the paper tray with the correct paper size or type.
- Touch **Use current [src]** to ignore the message and print from the tray selected for the print job.
- Touch **Continue** to continue the job if the correct size and type are loaded in the tray, and this size and type are specified in the printer control panel Paper menu.

  Note: If you touch Continue when there is no paper in the tray, the job is not continued.
- Touch **Cancel job** to cancel the current job.

Check tray <x> connection

Try one or more of the following:

- Turn the printer off and then back on.

If the error occurs a second time:

1. Turn the printer off.
2. Unplug the power cord from the wall outlet.
3. Remove the tray.
4. Reattach the tray.
5. Connect the power cord to a properly grounded outlet.
6. Restart the printer.

If the error occurs again:

1. Turn the printer off.
2. Unplug the power cord from the wall outlet.
3. Remove the tray.
4. Contact Customer Support.

- Touch **Continue** to clear the message and print without using the tray.

Close door or insert cartridge

The cartridge is missing or not installed correctly. Insert the cartridge and close all doors and covers.

Close finisher side door

Close the side door on the finisher.

Connect <x>bps

The fax is connected. Wait for the message to clear.

Note: <x> is the baud rate per second.

Dialing

A fax number is dialed. If the number is too long to fit on the screen, only the word **`Dialing`** appears. Wait for the message to clear.

Disk corrupted

The printer attempted a hard disk recovery on a corrupted hard disk, and the hard disk cannot be repaired. The hard disk must be reformatted.

Touch **Reformat disk** to reformat the hard disk and clear the message.

Note: Reformatting the disk deletes all the files currently stored on the disk.

Disk Full - Scan Job Canceled

The scan job canceled or stopped due to insufficient printer hard disk space.

Touch **Continue** to clear the message.

Fax failed

The fax failed to be sent. Wait for the message to clear.

Fax memory full

There is not enough memory to send the fax job.

Touch **Continue** to clear the message.

Fax partition inoperative. Contact system administrator.

The fax partition appears to be corrupted. Try one or more of the following:

- Touch **Continue** to clear the message.
- Turn the printer off and then back on to reset the printer. If the message appears again, then contact your system support person.

Fax server 'To Format' not set up. Contact system administrator.

The printer is in Fax Server mode, but the Fax Server setup has not been completed.

Try one or more of the following:

- Touch **Continue** to clear the message.
- Complete the Fax Server setup. If the message appears again, contact your system support person.

Fax Station Name not set up

The Fax Station Name has not been entered. Sending and receiving faxes is disabled until fax is configured properly.

Try one or more of the following:

- Touch **Continue** to clear the message.
- Complete the Analog Fax Setup. If the message appears again, contact your system support person.

Fax Station Number not set up

The Fax Station Number has not been entered. Sending and receiving faxes is disabled until fax is configured properly.

Try one or more of the following:

- Touch **Continue** to clear the message.
- Complete the Analog Fax Setup. If the message appears again, contact your system support person.

Flushing buffer

Wait for the message to clear.

Insert staple cartridge

Try one or more of the following:

- Insert a staple cartridge to clear the message.
- Touch **Continue** to clear the message and print without using the staple feature.

Insert Tray <x>

Insert the specified tray into the printer.

Install bin <x>

Try one or more of the following:

- Install the specified bin:
  1. Turn the printer off.
  2. Unplug the power cord from the wall outlet.
  3. Install the specified bin.
  4. Connect the power cord to a properly grounded outlet.
  5. Restart the printer.
- Cancel the current job.

Install envelope feeder

Try one or more of the following:

- Install the envelope feeder:
  1. Turn the printer off.
  2. Unplug the power cord from the wall outlet.
  3. Install the envelope feeder.
  4. Connect the power cord to a properly grounded outlet.
  5. Restart the printer.
- Cancel the current job.

Install Tray <x>

Try one or more of the following:

- Install the specified tray:
  1. Turn the printer off.
  2. Unplug the power cord from the wall outlet.
  3. Install the specified tray.
  4. Connect the power cord to a properly grounded outlet.
  5. Restart the printer.
- Cancel the current job.

Invalid PIN

Enter a valid PIN.

Job stored for delayed transmission

The scanning completed for a delayed send fax job. Wait for the message to clear.

Line busy

A fax number is dialed, but the fax line is busy. Wait for the message to clear.

Load <src> with <x>

<src> is a tray or feeder, and <x> is a paper type or size.

Try one or more of the following:

- Load the specified paper in the tray.
- Touch **Continue** to clear the message and continue printing.

  If the printer finds a tray that has the correct paper type and size, it feeds from that tray. If the printer cannot find a tray with the correct paper type and size, it prints from the default source.
- Cancel the current job.

Load manual feeder with <x>

<x> is a paper type or size.

Try one or more of the following:

- Load the specified paper in the multipurpose feeder.
- Touch **Continue** to clear the message and continue printing.

  If the printer finds a tray that has the correct paper type and size, then it feeds from that tray. If the printer cannot find a tray with the correct paper type and size, then it prints from the default source.
- Cancel the current job.

Load staples

Try one or more of the following:

- Replace the specified staple cartridge in the finisher.
- Touch **Continue** to clear the message and continue printing.
- Touch **Cancel job** to cancel the print job.

Memory full, cannot print faxes

There is not enough memory to print the fax job.

Touch **Continue** to clear the message without printing. Held faxes will attempt to print after the printer has been restarted.

Network/Network <x>

The printer is connected to the network.

Network indicates that the printer is using the standard network port built into the printer system board. **Network <x>** indicates that an internal print server is installed inside the printer or that the printer is connected to an external print server.

No analog phone line connected to modem, fax is disabled.

The printer is not detecting an analog phone line, so the fax is disabled. Connect the printer to an analog phone line.

No answer

A fax number is dialed, but no connection is made. Wait for the message to clear.

No dial tone

The printer does not have a dial tone. Wait for the message to clear.

Queued for sending

The scanning process of a fax job completed, but the job is not sent yet because another fax job is being sent or received. Wait for the message to clear.

Ready

The printer is ready to receive print jobs.

Reattach bin <x>

Try one or more of the following:

- Turn the printer off and then back on.

  If the error occurs a second time:

  1. Turn the printer off.
  2. Unplug the power cord from the wall outlet.
  3. Remove the specified bin.
  4. Reattach the bin.
  5. Connect the power cord to a properly grounded outlet.
  6. Restart the printer.

  If the error occurs again:

  1. Turn the printer off.
  2. Unplug the power cord from the wall outlet.

3. Remove the specified bin.
4. Contact Customer Support.

- Touch **Continue** to clear the message and print without using the specified bin.

Reattach bin <x> – <y>

Try one or more of the following:

- Turn the printer off and then back on.

  If the error occurs a second time:

  1. Turn the printer off.
  2. Unplug the power cord from the wall outlet.
  3. Remove the specified bins.
  4. Reattach the bins.
  5. Connect the power cord to a properly grounded outlet.
  6. Restart the printer.

  If the error occurs again:

  1. Turn the printer off.
  2. Unplug the power cord from the wall outlet.
  3. Remove the specified bins.
  4. Contact Customer Support.

- Touch **Continue** to clear the message and print without using the specified bins.

Reattach envelope feeder

Try one or more of the following:

- Turn the printer off and then back on.

  If the error occurs a second time:

  1. Turn the printer off.
  2. Unplug the power cord from the wall outlet.
  3. Remove the envelope feeder.
  4. Reattach the envelope feeder.
  5. Connect the power cord to a properly grounded outlet.
  6. Restart the printer.

  If the error occurs again:

  1. Turn the printer off.
  2. Unplug the power cord from the wall outlet.
  3. Remove the envelope feeder.
  4. Contact Customer Support.

- Touch **Continue** to clear the message and print without using the envelope feeder.

Receive complete

The printer has received an entire fax job. Wait for the message to clear.

Receiving page <n>

The printer receives page <n> of the fax job, where <n> is the number of the page received. Wait for the message to clear.

Remove packaging material, check <x>

Remove any remaining packaging material from the specified location.

Remove paper from <linked bin set name>

Remove the paper from the specified bin. The printer automatically senses paper removal and resumes printing.

If removing the paper does not clear the message, then touch **Continue**.

Remove paper from all bins

Remove the paper from all of the bins. The printer automatically senses paper removal and resumes printing.

If removing the paper does not clear the message, then touch **Continue**.

Remove paper from bin <x>

Remove the paper from the specified bin. The printer automatically senses paper removal and resumes printing.

If removing the paper does not clear the message, then touch **Continue**.

Remove paper from standard output bin

Remove the stack of paper from the standard exit bin.

Replace <x> if restarting job.

One or more messages which interrupted a scan job are now cleared. Replace the original documents in the scanner to restart the scan job. <x> is a page of the scan job.

Try one or more of the following:

- Touch **Cancel Job** if a scan job is processing when the message appears. This cancels the job and clears the message.
- Touch **Scan from Automatic Document Feeder** if the page jam recovery is active. Scanning resumes from the ADF immediately after the last successfully scanned page.
- Touch **Scan from flatbed** if page jam recovery is active. Scanning resumes from the scanner glass immediately after the last successfully scanned page.

- Touch **Finish job without further scanning** if page jam recovery is active. The job ends at the last successfully scanned page, but the job is not canceled. Successfully scanned pages go to their destination: copy, fax, e-mail, or FTP.
- Touch **Restart job** if job recovery is active. The message clears. A new scan job containing the same parameters as the previous job starts.

Replace wiper

Replace the fuser wiper, or try one or more of the following:

- Touch **Continue** to clear the message and continue printing.
- Touch **Ignore** to clear the message, but at the next power-on, the message appears again.

Restore Held Jobs?

Try one or more of the following:

- Touch **Continue** to restore all held jobs stored on the printer hard disk.
- Touch **Do not restore** if you do not want any print jobs to be restored.

Scan Document Too Long

The scan job exceeds the maximum number of pages. Touch **Cancel Job** to clear the message.

Scanner ADF Cover Open

The ADF cover is open. The message clears when the cover is closed.

Scanner Jam Access Cover Open

Close the bottom ADF door to clear the message.

Securely clearing disk space

The printer hard disk wiping process needs to recover. The message clears when all blocks are cleared.

Sending page <n>

The printer sends page <n> of the fax job, where <n> is the number of the page sent. Wait for the message to clear.

Serial <x>

The printer is using a serial cable connection. The serial port is the active communication link.

Set clock

The clock is not set. This message appears if no other fax status message appears. It remains until the clock is set.

SMTP server not set up. Contact system administrator.

An error occurred on the SMTP server, or the SMTP server is not configured properly. Touch **Continue** to clear the message. If the message appears again, contact your system support person.

Some held jobs were not restored

Touch **Continue** to delete the specified job.

Note: Some held jobs are not restored. They stay on the hard disk and are inaccessible.

System busy, preparing resources for job.

Not all resources needed for the job are available. Wait for the message to clear.

System busy, preparing resources for job. Deleting held job(s).

Not all resources needed for the job are available. Some held jobs are deleted to free system memory. Wait for the message to clear.

Unsupported disk

An unsupported printer hard disk has been installed. Remove the unsupported device, and then install a supported one.

Unsupported USB device, please remove

Remove the unrecognized USB device.

Unsupported USB hub, please remove

Remove the unrecognized USB hub.

USB/USB <x>

The printer is using a USB cable connection. The USB port is the active communication link.

Waiting for redial

The printer is waiting to redial the fax number. Wait for the message to clear.

30 Invalid refill, change cartridge

Remove the print cartridge, and then install a supported one.

31 Replace defective cartridge

Remove the defective print cartridge, and then install a new one.

32 Cartridge part number unsupported by device

Remove the print cartridge, and then install a supported one.

34 Short paper

Try one or more of the following:

- Load the appropriate paper or other specialty media in the proper tray.
- Touch **Continue** to clear the message and print the job using a different paper tray.
- Check tray length and width guides and make sure the paper is properly loaded in the tray.
- Check the Print Properties or Print dialog settings to make sure the print job is requesting the correct paper size and type.
- Check that the paper size is correctly set. For example, if the MP Feeder Size is set to Universal, make sure the paper is large enough for the data being printed.
- Cancel the current print job.

35 Insufficient memory to support Resource Save feature

Try one or more of the following:

- Touch **Continue** to disable Resource Save and continue printing.
- To enable Resource Save after receiving this message, make sure the link buffers are set to Auto, and then exit the menus to activate the link buffer changes. When **`Ready`** appears, enable Resource Save.
- Install additional memory.

37 Insufficient memory to collate job

Try one or more of the following:

- Touch **Continue** to print the portion of the job already stored and begin collating the rest of the print job.
- Cancel the current print job.

37 Insufficient memory for Flash Memory Defragment operation

Try one or more of the following:

- Touch **Continue** to stop the defragment operation and continue printing.
- Delete fonts, macros, and other data in printer memory.
- Install additional printer memory.

37 Insufficient memory, some Held Jobs were deleted

The printer deleted some held jobs in order to process current jobs.

Touch **Continue** to clear the message.

37 Insufficient memory, some held jobs will not be restored

The printer was unable to restore some or all of the confidential or held jobs on the printer hard disk.

Touch **Continue** to clear the message.

38 Memory full

Try one or more of the following:

- Touch **Continue** to clear the message.
- Cancel the current print job.
- Install additional printer memory.

39 Complex page, some data may not have printed

Try one or more of the following:

- Touch **Continue** to clear the message and continue printing.
- Cancel the current print job.
- Install additional printer memory.

42.xy Cartridge region mismatch

Install a print cartridge that matches the region number of the printer. x indicates the value of the printer region. y indicates the value of the cartridge region. x and y can have the following values:

1	US
2	Europe, the Middle East, and Africa
3	Asia
4	Latin America
9	Invalid region

50 PPDS font error

Try one or more of the following:

- Touch **Continue** to clear the message and continue printing.
- The printer cannot find a requested font. From the PPDS menu, select **Best Fit**, and then select **On**. The printer will find a similar font and reformat the affected text.
- Cancel the current print job.

51 Defective flash detected

Try one or more of the following:

- Touch **Continue** to clear the message and continue printing.
- Cancel the current print job.

52 Not enough free space in flash memory for resources

Try one or more of the following:

- Touch **Continue** to clear the message and continue printing.

  Downloaded fonts and macros not previously stored in flash memory are deleted.
- Delete fonts, macros, and other data stored in flash memory.
- Upgrade to a larger capacity flash memory card.

53 Unformatted flash detected

Try one or more of the following:

- Touch **Continue** to stop the defragment operation and continue printing.
- Format the flash memory. If the error message remains, the flash memory may be defective and require replacing.

54 Network <x> software error

<x> is the number of the network connection.

Try one or more of the following:

- Touch **Continue** to continue printing.
- Turn the printer off and then back on to reset the printer.
- Upgrade (flash) the network firmware in the printer or print server.

54 Serial option <x> error

<x> is the number of the serial option.

Try one or more of the following:

- Check that the serial cable is connected correctly and is the proper one for the serial port.
- Check that the serial interface parameters (protocol, baud, parity, and data bits) are set correctly on the printer and host computer.
- Touch **Continue** to continue printing.
- Turn the printer power off and then back on to reset the printer.

54 Standard network software error

Try one or more of the following:

- Touch **Continue** to continue printing.
- Turn the printer off and then back on to reset the printer.

- Upgrade (flash) the network firmware in the printer or print server.

55 Unsupported option in slot <x>

<x> is a slot on the printer system board.

Try one or more of the following:

1. Turn the printer power off.
2. Unplug the power cord from the wall outlet.
3. Remove the unsupported option card from the printer system board.
4. Connect the power cord to a properly grounded outlet.
5. Turn the printer power back on.

56 Parallel port <x> disabled

<x> is the number of the parallel port.

Try one or more of the following:

- Touch **Continue** to clear the message.

  The printer discards any data received through the parallel port.
- Make sure the Parallel Buffer menu item is not set to Disabled.

56 Serial port <x> disabled

<x> is the number of the serial port.

Try one or more of the following:

- Touch **Continue** to clear the message.

  The printer discards any data received through the serial port.
- Make sure the Serial Buffer menu item is not set to Disabled.

56 Standard parallel port disabled

Try one or more of the following:

- Touch **Continue** to clear the message.

  The printer discards any data received through the parallel port.
- Make sure the Parallel Buffer menu item is not set to Disabled.

56 Standard USB port disabled

Try one or more of the following:

- Touch **Continue** to clear the message.

  The printer discards any data received through the USB port.
- Make sure the USB Buffer menu item is not set to Disabled.

56 USB port <x> disabled

<x> is the number of the USB port.

Try one or more of the following:

- Touch **Continue** to clear the message.

  The printer discards any data received through the USB port.
- Make sure the USB Buffer menu item is not set to Disabled.

57 Configuration change, held jobs were not restored

Since the time the jobs were stored on the printer hard disk something has changed in the printer to invalidate the held jobs. Possible changes include:

- The printer firmware has been updated.
- Paper input, output, or duplex options needed for the print job were removed.
- The print job was created using data from a device in the USB port and the device is no longer in the port.
- The printer hard disk contains jobs that were stored while installed in a different printer model.

Touch **Continue** to clear the message.

58 Too many bins attached

1. Turn the printer power off.
2. Unplug the power cord from the wall outlet.
3. Remove the additional bins.
4. Connect the power cord to a properly grounded outlet.
5. Turn the printer power back on.

58 Too many disks installed

1. Turn the printer off.
2. Unplug the power cord from the wall outlet.
3. Remove the extra disks.
4. Connect the power cord to a properly grounded outlet.
5. Turn the printer back on.

58 Too many flash options installed

1. Turn the printer off.
2. Unplug the power cord from the wall outlet.
3. Remove the excess flash memory.

4 Connect the power cord to a properly grounded outlet.

5 Turn the printer back on.

58 Too many trays attached

1 Turn the printer off.

2 Unplug the power cord from the wall outlet.

3 Remove the additional trays.

4 Connect the power cord to a properly grounded outlet.

5 Turn the printer back on.

59 Incompatible envelope feeder

Try one or more of the following:

- Remove the envelope feeder.
- Touch **Continue** to clear the message and continue printing without using the envelope feeder.

59 Incompatible output bin <x>

Try one or more of the following:

- Remove the specified output bin.
- Touch **Continue** to clear the message and continue printing without using the specified output bin.

59 Incompatible tray <x>

Try one or more of the following:

- Remove the specified tray.
- Touch **Continue** to clear the message and continue printing without using the specified tray.

61 Remove defective disk

Try one or more of the following:

- Touch **Continue** to clear the message and continue printing.
- Install a different printer hard disk before performing any operations that require a printer hard disk.

62 Disk full

Try one or more of the following:

- Touch **Continue** to clear the message and continue processing.
- Delete fonts, macros, and other data stored on the printer hard disk.
- Install a larger printer hard disk.

63 Unformatted disk

Try one or more of the following:

- Touch **Continue** to clear the message and continue printing.
- Format the printer hard disk.

If the error message remains, the hard disk may be defective and require replacing.

80 Routine maintenance needed

The printer needs to have routine maintenance done. Order a maintenance kit, which contains all the items necessary to replace the pick rollers, the charge roll, the transfer roller, and the fuser.

81 Routine Maintenance

The fuser that had been previously installed in a different printer has reached its maximum page count.

Replace the fuser. See **"Fuser unit assembly removal" on page 373**.

88 Cartridge low

The toner is low. Replace the print cartridge, and then touch **Continue** to clear the message and continue printing.

88.yy Cartridge nearly low

The toner is low. Replace the print cartridge, and then touch **Continue** to clear the message and continue printing.

88.yy Replace cartridge

The print cartridge is empty.

1. Replace the print cartridge.
2. Touch **Continue** to clear the message.

200–282.yy paper jam

1. Clear the paper path.
2. Touch **Continue** to continue printing.

283 Staple jam

1. Clear the jam from the specified stapler area(s).
2. Touch **Continue** to continue printing.

290-294.yy scanner jam

Clear all original documents from the scanner.

293 Replace all originals if restarting job.

The scanner was instructed to scan using the ADF but there is no paper in the ADF. Load paper in the ADF.

Try one or more of the following:

- Touch **Continue** if no scan job is active when the attendance message appears. This clears the message.
- Touch **Cancel Job** if a scan job is processing when the attendance message appears. This cancels the job and clears the message.
- Touch **Scan from Automatic Document Feeder** if the page jam recovery is active. Scanning resumes from the ADF immediately after the last successfully scanned page.
- Touch **Scan from flatbed** if page jam recovery is active. Scanning resumes from the flatbed immediately after the last successfully scanned page.
- Touch **Finish job** without further scanning if page jam recovery is active. The job ends at the last successfully scanned page, but the job is not canceled. Successfully scanned pages go to their destination: copy, fax, e-mail, or FTP.
- Touch **Restart job** if job recovery is active and you are able to restart the job. The message clears. A new scan job containing the same parameters as the previous job starts.

293.02 Flatbed Cover Open

Close the scanner cover.

840.01 Scanner Disabled

This message indicates that the scanner has been disabled by the system support person.

841-846 Scanner Service Error

1. Turn the printer off.
2. Unplug the power cord from the wall outlet.
3. Check all cable connections.
4. Connect the power cord to a properly grounded outlet.
5. Turn the printer back on.

If the service message appears again, then contact Customer Support, and report the message.

900–999 Service <message>

1. Turn the printer off.
2. Unplug the power cord from the wall outlet.

3 Check all cable connections.

4 Connect the power cord to a properly grounded outlet.

5 Turn the printer back on.

If the service message appears again, contact Customer Support, and report the message.

1565 Emulation error, load emulation option

The printer automatically clears the message in 30 seconds and then disables the download emulator on the firmware card.

To fix this, download the correct download emulator version from the Lexmark Web site at **www.lexmark.com**.

User attendance messages

User attendance messages (0-99)

Error code	Description	Action
System Timeout	The system detects a firmware component that is no longer responding.	Go to **"System timeout service check" on page 204**.
30.xx	The cartridge is invalid.	Go to **"Invalid print cartridge service check" on page 204**.
31.xx	The cartridge is defective.	Go to **"Defective print cartridge service check" on page 204**.
32.xx	The cartridge is not supported.	Go to **"Invalid print cartridge service check" on page 204**.
34	The paper length is too short to print the formatted data.	Go to **"Paper is too short service check" on page 205**.
35	The printer memory is insufficient to enable Resource Save.	Go to **"Resource Save off deficient memory service check" on page 205**.
37A	The printer memory is insufficient for Flash Memory Defragment operation.	Go to **"Insufficient Collation Area service check" on page 206**.
37C	The printer memory was insufficient to restore a job.	Go to **"Insufficient Memory service check" on page 206**.
38	Printer memory is insufficient to continue processing the job.	Go to **"Memory Full service check" on page 206**.
39	The page is too complex to print.	Go to **"Complex page service check" on page 207**.
42.xy	The cartridge is incompatible due to printer region mismatch.	Go to **"Cartridge Region Mismatch service check" on page 207**.
50	PPDS encountered a font error.	Go to **"PPDS Font Error service check" on page 207**.

Error code	Description	Action
51	The printer detects a defective flash.	Go to **"Defective or full Flash service check" on page 208**.
52	The printer detects an unformatted flash at power on.	Go to **"Defective or full Flash service check" on page 208**.
54A	A serial error (framing, parity, or overrun) has been detected on the specified serial port. This usually indicates that the serial port has not been set up correctly.	Go to **"Network service check" on page 208**.
54B	The standard network port is detected, but the printer cannot establish communications with it.	Go to **"Network software eror service check" on page 208**.
54C	An optional network port is detected, but the printer cannot establish communications with it.	Go to **"Network software eror service check" on page 208**.
55B	An unsupported option is installed in the specified solutions port.	Go to **"Unsupported Option in Slot [x] service check" on page 211**.
56A	The parallel port or serial port is disabled.	Go to **"Network service check" on page 208**.
56B	The standard or optional USB port is disabled.	Go to **"Network software eror service check" on page 208**.
56C	Optional input trays installed above the RFID option or no input trays installed	Go to **"Standard USB port dsabled" on page 211**.
58A	Excess bins detected.	Go to **"Too Many Bins Attached service check" on page 211**.
58B	Excess disks detected.	Go to **"Too Many Disks Attached service check" on page 211**.
58C	Excess flash options detected.	Go to **"Too Many Flash Options service check" on page 212**.
58D	Excess trays detected.	Go to **"Too Many Trays Attached service check" on page 212**.
59	The duplex option is incompatible.	Go to **"Incompatible Duplex service check" on page 212**.
59	The envelope feeder is incompatible.	Go to **"Incompatible Duplex service check" on page 212**.
59	The output bin is incompatible.	Go to **"Incompatible Output Bin [x] service check" on page 213**.
59	The tray is incompatible.	Go to **"Incompatible Output Tray [x] service check" on page 213**.
61	The hard disk is defective.	Go to **"Defective Disk service check" on page 213**.
62	The hard disk is full.	Go to **"Disk Full service check" on page 213**.
80	The printer requires maintenance. The appropriate maintenance kit needs to be installed.	Go to **"Routine Maintenance Needed service check" on page 214**.

Error code	Description	Action
81	The fuser that had been previously installed in a different printer has reached its maximum page count.	Go to **“Replace fuser service check” on page 214**.
88A	The toner cartridge supply is low.	Go to **“Replace cartridge service check” on page 214**.
88C	The toner cartridge supply is very low.	Go to **“Replace cartridge service check” on page 214**.
88C	The toner cartridge supply is empty.	Go to **“Replace cartridge service check” on page 214**.

System timeout service check

Action	Yes	No
Turn off the printer, wait for a few seconds, and then turn on the printer. Does the problem remain?	Contact next level of support.	Problem is solved.

Invalid print cartridge service check

Action	Yes	No
Install the proper print cartridge. Does the problem remain?	Contact next level of support.	Problem is solved.

Defective print cartridge service check

Action	Yes	No
Step 1 Install the proper print cartridge. Does the problem remain?	Go to step 2.	Problem is solved.
Step 2 Remove and then reinstall the print cartridge ID connector assembly. Go to **“Print cartridge ID connector assembly removal” on page 316**. Does the problem remain?	Go to step 3.	Problem is solved.
Step 3 Replace the print cartridge ID connector assembly. Go to **“Print cartridge ID connector assembly removal” on page 316**. Does the problem remain?	Contact next level of support.	Problem is solved.

Paper is too short service check

Action	Yes	No
Step 1 Adjust the media tray guides to match the size of the media being used. Does the problem remain?	Go to step 2.	The problem is solved.
Step 2 Check if the switch (media size) is properly connected. Does the problem remain?	Go to step 3.	The problem is solved.
Step 3 Replace the switch (media size). Go to **"Switch (media size) assembly removal" on page 320**. Does the problem remain?	Go to step 4.	The problem is solved.
Step 4 Replace the media tray assembly. Does the problem remain?	Contact the next level of support.	The problem is solved.

Resource Save off deficient memory service check

Action	Yes	No
Step 1 Enable Resource Save. Does the problem remain?	Go to step 2.	Problem is solved.
Step 2 Install additional memory. Does the problem remain?	Contact next level of support.	Problem is solved.

Insufficient Collation Area service check

Action	Yes	No
Step 1 Delete fonts, macros, and other data in RAM. Does the problem remain?	Go to step 2.	Problem is solved.
Step 2 Install additional memory. Does the problem remain?	Contact next level of support.	Problem is solved.

Insufficient Memory service check

Action	Yes	No
Install additional memory. Does the problem remain?	Contact next level of support.	Problem is solved.

Memory Full service check

Action	Yes	No
Step 1 Perform the defragment operation. Does the problem remain?	Go to step 2.	Problem is solved.
Step 2 Delete fonts, macros, and other data in RAM. Does the problem remain?	Go to step 3.	Problem is solved.
Step 3 Install additional memory. Does the problem remain?	Go to step 4.	Problem is solved.
Step 4 Cancel the print job. Does the problem remain?	Go to step 5.	Problem is solved.
Step 5 Reset the printer. Does the problem remain?	Go to step 6.	Problem is solved.

Action	Yes	No
Step 6 Reset the active media bin. Does the problem remain?	Contact next level of support.	Problem is solved.

Complex page service check

Action	Yes	No
Step 1 Simplify, and then resend the print job. Does the problem remain?	Go to step 2.	The problem is solved.
Step 2 Press the  until Busy/Waiting appears, and then reset printer or the active bin. Does the problem remain?	Contact the next level of support.	The problem is solved.

Cartridge Region Mismatch service check

Action	Yes	No
Install a new toner cartridge that matches the correct regional specification. Does the problem remain?	Contact next level of support.	Problem is solved.

PPDS Font Error service check

Action	Yes	No
From the PPDS menu, select **Best Fit** > **On**. Does the problem remain?	Contact next level of support.	Problem is solved.

Defective or full Flash service check

Action	Yes	No
Step 1 Check the flash memory card for damage, and replace if necessary. Does the problem remain?	Go to step 2.	Problem is solved.
Step 2 Upgrade to a larger capacity flash memory card. Does the problem remain?	Contact next level of support.	Problem is solved.

Network software eror service check

Action	Yes	No
Upgrade the network firmware in the printer or print server. Does the problem remain?	Contact the next level of support.	The problem is solved.

Network service check

Note: Before starting this service check, print out the network setup page. This page is found under **Menu** > **Reports** > **Network Settings**. Consult the network administrator to verify that the physical and wireless network settings displayed on the network settings page for the device are properly configured. If a wireless network is used, then verify that the printer is in range of the host computer or wireless access point, and there is no electronic interference. Have the network administrator verify that the device is using the correct SSID, and wireless security protocols. For more network troubleshooting information, consult the Lexmark Network Setup Guide.

Actions	Yes	No
Step 1 If the device is physically connected to the network, make sure that the Ethernet cable is properly connected on both ends. Does the problem remain?	Go to step 2.	The problem is solved.
Step 2 Make sure that the printer status under Printers and Faxes on the host computer is set to online. Delete all print jobs in the print queue. Does the problem remain?	Go to step 3.	The problem is solved.

Actions	Yes	No
Step 3 Make sure that the IP address displayed on the network settings page match the IP address in the port of the drivers using the printer. Does the problem remain?	Go to step 4.	The problem is solved.
Step 4 Make sure that the printer uses a static IP address on a network. Does the problem remain?	Go to step 5.	The problem is solved.
Step 5 Make sure that the first two segments of the IP address is 169.254. Does the problem remain?	Go to step 6.	The problem is solved.
Step 6 POR the printer. Does the problem remain?	Go to step 7.	The problem is solved.
Step 7 Reset the address on the printer to match the IP address on the driver. Does the problem remain?	Go to step 8.	The problem is solved.
Step 8 **a** Contact the network administrator to verify that the printer and PC's IP address have identical subnet addresses. **b** If necessary, assign a unique IP address to the printer using the subnet address provided by the network administrator. Make sure that the printer IP address matches that of the printer driver. Does the problem remain?	Go to step 9.	The problem is solved.
Step 9 Replace the Ethernet cable. Does the problem remain?	Go to step 10.	The problem is solved.
Step 10 Consult the network administrator to verify that the network drop for activity is functioning properly. Does the problem remain?	Go to step 11.	The problem is solved.

Actions	Yes	No
Step 11 Replace the system card. Go to **"System card assembly removal" on page 321**. Does the problem remain?	Contact the next level of support.	The problem is solved.
Step 12 If the printer is connected to a wireless network, make sure that the printer is using the same wireless network as the other devices. Does the problem remain?	Go to step 13.	The problem is solved.
Step 13 Make sure that the printer is assigned to the correct wireless network. Does the problem remain?	Go to step 14.	The problem is solved.
Step 14 Make sure that the wireless card is properly seated on the controller board. Does the problem remain?	Go to step 15.	The problem is solved.
Step 15 Check the attached antenna for any damages, and if necessary, replace the antenna. Make sure that the antenna is properly connected to the wireless card. Does the problem remain?	Go to step 16.	The problem is solved.
Step 16 Check pin 6 for +3.3V and pin 5 for +5V on connector [x] of the controller board. Make sure that pins 1 and 4 are GND, and that the voltaghes and GNDs are correct. Does the problem remain?	Go to step 17.	The problem is solved.
Step 17 Replace the wireless card. Does the problem remain?	Go to step 18.	The problem is solved.
Step 18 Replace the system card. Go to**"System card assembly removal" on page 321**. Does the problem remain?	Contact the next level of support.	Contact the next level of support.

Unsupported Option in Slot [x] service check

Action	Yes	No
Remove unsupported internal option. Does the problem remain?	Contact next level of support.	Problem is solved.

Standard USB port dsabled

Action	Yes	No
Step 1 From the operator panel, press the Submit button to clear the message. The printer discards any data received on the USB port. Does the problem remain?	Go to step 2.	The problem is solved.
Step 2 From the control panel, press  until **Busy/Waiting** appears, and then reset the printer and the active bin.	Contact the next level of support.	The problem is solved.

Too Many Bins Attached service check

Action	Yes	No
a Turn off the printer, and unplug it. **b** Remove the excess bins. **c** Plug in the printer, and turn it on. Does the problem remain?	Contact next level of support.	Problem is solved.

Too Many Disks Attached service check

Action	Yes	No
a Turn off the printer, and unplug it. **b** Remove the excess disks. **c** Plug in the printer, and turn it on. Does the problem remain?	Contact next level of support.	Problem is solved.

Too Many Flash Options service check

Action	Yes	No
a Turn off the printer, and unplug it. **b** Remove the excess flash options. **c** Plug in the printer, and turn it on. Does the problem remain?	Contact next level of support.	Problem is solved.

Too Many Trays Attached service check

Action	Yes	No
a Turn off the printer, and unplug it. **b** Remove the excess trays. **c** Plug in the printer, and turn it on. Does the problem remain?	Contact next level of support.	Problem is solved.

Incompatible Duplex service check

Action	Yes	No
a Turn off the printer, and unplug it. **b** Remove the incompatible external duplex unit assembly. **c** Plug in the printer, and turn it on. Does the problem remain?	Contact next level of support.	Problem is solved.

Incompatible Envelope Feeder service check

Action	Yes	No
a Turn off the printer, and unplug it. **b** Remove the incompatible envelope feeder. **c** Plug in the printer, and turn it on. Does the problem remain?	Contact next level of support.	Problem is solved.

Incompatible Output Bin [x] service check

Action	Yes	No
a Turn off the printer, and unplug it. **b** Remove the incompatible output option. **c** Plug in the printer, and turn it on. Does the problem remain?	Contact next level of support.	Problem is solved.

Incompatible Output Tray [x] service check

Action	Yes	No
a Turn off the printer, and unplug it. **b** Remove the incompatible trays. **c** Plug in the printer, and turn it on. Does the problem remain?	Contact next level of support.	Problem is solved.

Defective Disk service check

Action	Yes	No
Replace the hard disk with a higher-capacity hard disk. Does the problem remain?	Contact next level of support.	Problem is solved.

Disk Full service check

Action	Yes	No
Step 1 Delete fonts, macros, and other data on the hard disk. Does the problem remain?	Go to step 2.	Problem is solved.
Step 2 Replace the hard disk with a higher-capacity hard disk. Does the problem remain?	Contact next level of support.	Problem is solved.

Routine Maintenance Needed service check

Action	Yes	No
a Replace the maintenance kit. **b** Reset the maintenance counter. Go to **"Maintenance page counter reset" on page 279**. Does the problem remain?	Contact next level of support.	Problem is solved.

Replace fuser service check

Action	Yes	No
Step 1 **a** Update the printer firmware to at least P631a/E220. **b** Replace the fuser. Go to **"Fuser unit assembly removal" on page 373**. Does the problem remain?	Go to step 2.	The problem is solved.
Step 2 **a** Replace the maintenance kit. **b** Reset the maintenance counter. Go to **"Maintenance page counter reset" on page 279**. Does the problem remain?	Contact the next level of support.	The problem is solved.

Replace cartridge service check

Action	Yes	No
Replace the cartridge. Does the problem remain?	Contact next level of support.	Problem is solved.

Printer hardware errors

84y.xx error

84y.xx error messages

Error code	Description	Action
840.01	The scanner has been manually disabled.	Go to **"Scanner is disabled service check" on page 215**.
840.02	The scanner has automatically been disabled by the controller.	Go to **"Scanner is disabled service check" on page 215**.

Error code	Description	Action
841.xx	The scanner image ASIC has failed.	Go to **"Scanner image ASIC failure service check" on page 215**.
842.xx	The ADF controller card has lost communication with the system.	Go to **"ADF communication failure service check" on page 216**.
843.xx	The scanner carriage home position detection has failed.	Go to **"Scanner carriage mechanical failure service check" on page 216**.
844.xx	The flatbed scanner exposure lamp has failed.	Go to **"Scanner exposure lamp failure service check" on page 216**.
845.xx	The scanner CCD has failed.	Go to **"Scanner CCD failure service check" on page 216**.
849.00	Machine is missing a hard drive.	Go to **"Hard drive is missing service check" on page 216**.
849.01	Machine has an installed hard drive that should not be present.	Go to **"Hard drive installation service check" on page 217**.

Scanner is disabled service check

Action	Yes	No
Enter the Configuration mode, and then enable the scanner. Does the problem remain?	Contact the next level of support.	The problem is solved.

Scanner image ASIC failure service check

Action	Yes	No
Step 1 Check if all connections on the ADF controller card assembly are properly connected. Does the problem remain?	Go to step 2.	The problem is solved.
Step 2 Replace the scanner controller card assembly. Go to **"Scanner controller card assembly removal (models X651, X652, X654, and X656)" on page 520** or **"Scanner controller card assembly removal (model X658)" on page 517**.	Contact the next level of support.	The problem is solved.

ADF communication failure service check

Action	Yes	No
Step 1 Check if all connections on the ADF controller card assembly are properly connected. Does the problem remain?	Go to step 2.	The problem is solved.
Step 2 Replace the ADF controller card assembly. Go to **"ADF controller card removal" on page 541**.	Contact the next level of support.	The problem is solved.

Scanner carriage mechanical failure service check

Action	Yes	No
Step 1 Turn off the machine, and then turn it back on. Does the problem remain?	Go to step 2.	The problem is solved.
Step 2 Check the sensor (scanner HP) for proper installation and operation. Go to **"Sensor (scanner HP) service check" on page 217**.	Contact the next level of support.	The problem is solved.

Scanner exposure lamp failure service check

Action	Yes	No
Replace the exposure lamp. Go to **"Scanner/ADF duplex CCD exposure lamp removal" on page 505**. Does the problem remain?	Contact the next level of support.	The problem is solved.

Scanner CCD failure service check

Action	Yes	No
Replace the scanner CCD assembly. Go to **"Scanner CCD assembly removal" on page 504**.	Contact the next level of support.	The problem is solved.

Hard drive is missing service check

Action	Yes	No
Install the hard drive. Does the problem remain?	Contact the next level of support.	The problem is solved.

Hard drive installation service check

Action	Yes	No
Remove, and then reinstall the hard drive. Does the problem remain?	Contact the next level of support.	The problem is solved.

Sensor (scanner HP) service check

Action	Yes	No
Step 1 Check the sensor (scanner HP) for proper installation, and if necessary, reinstall the sensor. Does the problem remain?	Go to step 2.	The problem is solved.
Step 2 Check the sensor (scanner HP) for proper operation. **a** Enter the Diagnostic mode. **b** Select **Scanner tests** > **Sensor tests**. **c** Observe the line item, "Scanner HP." Does the display on the operator panel change every time the sensing area of the sensor is interrupted or blocked?	Go to step 3.	Go to step 4.
Step 3 Check the sensor (scanner HP) for proper connection. Does the problem remain?	Go to step 4.	The problem is solved.
Step 4 Replace the sensor (scanner HP). Go to **"Sensor (scanner HP) assembly with bracket removal" on page 517**. Does the problem remain?	Contact the next level of support.	The problem is solved.

9yy errors

Procedure before starting the 9yy service checks

You will need to retrieve certain information. This information will aid your next level of support in diagnosing the problem before replacing the controller board.

Warning—Potential Damage: Do not replace the controller board unless directed by your next level of support.

1. Collect the history information and firmware logs (Fwdebug and logs.tar.gz) from the SE menu.
2. Collect the settings from the menu settings page.
3. Collect information from the user.

Note: Not all of the items are retrievable from the printer you are working on.

A. Collecting the history information from the SE menu

Note: Make sure that your printer is connected to a network or to a print server.

1. Open a Web browser, type **`http://printer_IP_address/se`**, and then press **Enter**.

   Notes:

   - **`printer_IP_address`** is the TCP/IP address of the printer
   - **`se`** is required to access the printer diagnostic information

2. Click **History Information**, copy all information, and then save it as a text file.
3. E-mail the text file to your next level of support.

B. Collecting the firmware logs (Fwdebug and logs.tar.gz) from the SE menu

Notes:

- Make sure that your printer is connected to a network or to a print server.
- Some printers are designed to restart automatically after a 9yy error. On these printers, you can retrieve the secondary crash code information using the SE menu.
- Fwedebugs can also be referred to as LBtrace. If FWEdebugs does not appear in the list, then look for LBtrace. Multiple LBtrace logs can appear in the list of links referred to in step 2.

1. Open a Web browser, type **`http://printer_IP_address/se`**, and then press **Enter**.
2. Click **List Fwedebugs captured during reboots**.

   Note: A list of the secondary crash codes retrieved from previous reboots will be generated. If there are Fwedebugs listed, then click **Dump Fwedebug log0**, **Dump Fwedebug log1**, and **Dump Fwedebug log2**. Clicking these links will dump the debug logs to the computer. Take note of the destination folder where the logs are saved.

3. E-mail the logs to your next level of support.

   Note: Some printer SE menus give you the option of clicking **Logs Gzip Compressed**. If this option is shown in the menu, then click it and retrieve the compressed log file. Take note of the destination folder where the log file is saved.

C. Collecting the settings from the menu settings page

Note: The menu settings page is different for each printer. For more information see the *User's Guide*. Your next level of support will tell you which page they want to see.

Copying the menu settings page from the Embedded Web Server (EWS)

Note: Make sure that your printer is connected to a network or to a print server.

1. Open a Web browser, type **`http://printer_IP_address`**, and then press **Enter**.
2. Click Settings, and then select one of the settings pages from the links shown on the page.
3. Copy all the information, and then save it as a text file.
4. E-mail the text file to your next level of support.

Printing the menu settings page

1 From the home screen, navigate to:

Reports > **Menu Settings Page**

2 Print the menu settings page, and then use Scan to E-mail to send it to your next level of support.

D. Collecting information from the user

Ask the user for information about the following:

- Print job being run
- Operating system being used
- Print driver being used
- Other information on what was happening when the 9yy error occurred

900.xx–906.xx error messages

Error code	Description	Action
900.xx	Code detected unusual event or timing.	Go to **"System software (900.xx) error service check" on page 232**.
901.xx	Code detected unusual event or timing.	Go to **"System software (901.xx) error service check" on page 237**.
902.xx	Code detected unusual event or timing.	Go to **"System software (902.xx) error service check" on page 237**.
903.xx	Code detected unusual event or timing.	Go to **"Paperport link driver error service check" on page 238**.
904.xx	Code detected unusual event or timing.	Go to **"RIP interface error service check" on page 238**.
905.xx	Code detected unusual event or timing.	Go to **"Paperport device interface error service check" on page 239**.
906.xx	Code detected unusual event or timing.	Go to **"RIP interface driver error service check" on page 239**.

910.xx–917.xx error messages

Error code	Description	Action
910.00	The pick arm motor has stalled or become obstructed.	Go to **"Pick arm motor service check" on page 240**.
911.00	The pick arm motor encoder continues to detect pulse after motor stops.	
912.00	The pick arm motor does not rotate at the specified speed.	
913.00	The pick arm motor does not rotate at the specified speed.	
914.00	The pick arm motor encoder detection is lost during normal operation.	
914.01	The pick arm motor does not rotate at the specified speed.	
915.00	The redrive motor encoder detection is lost during normal operation.	Go to **"Redrive motor assembly service check" on page 240**.
915.01	The redrive motor does not rotate at the specified speed.	
916.00	The duplex drive motor encoder detection is lost during normal operation.	Go to **"Internal duplex drive motor service check" on page 241**.
916.01	The duplex drive motor does not rotate at the specified speed.	
917.00	Problem with transfer — transfer servo start error.	Go to **"Transfer problem service check" on page 241**.

920.xx error messages

Error code	Description	Action
920.00	Fuser does not maintain proper operating temperature within steady state control.	Go to **"Fuser (920.00–920.04) failure service check" on page 242**.
920.01	The fuser hot roll took too long to heat up after transitioning to new enhanced mode within standby control only.	
920.02	The fuser hot roll fell to far below desired temperature while in standby control.	
920.03	The fuser hot roll is too cool while checking for slope change in standby.	
920.04	The fuser hot roll is too cool when heating to desired temperature after slope change within standby control only.	
920.06	The fuser hot roll temperature does not increase while the lamp is turned on.	Go to **"Fuser (920.06) failure service check" on page 243**.

Error code	Description	Action
920.07	The fuser hot roll temperature is not maintained properly while the media in the fuser nip.	Go to **“Fuser (920.07, 920.31, 920.32) failure service check” on page 243**.
920.25	Fuser does not maintain proper operating temperature within steady state control.	Go to **“Fuser (920.25–920.29) failure service check” on page 244**.
920.26	The fuser hot roll took too long to heat up after transitioning to new enhanced mode within standby control only.	
920.27	The fuser hot roll fell to far below desired temperature while in standby control.	
920.28	The fuser hot roll is too cool while checking for slope change in standby.	
920.29	The fuser hot roll is too cool when heating to desired temperature after slope change within standby control only.	
920.31	The fuser hot roll temperature does not increase while the lamp is turned on.	Go to **“Fuser (920.07, 920.31, 920.32) failure service check” on page 243**.
920.32	The fuser hot roll temperature is not maintained properly while the media in the fuser nip.	
920.50	Fuser does not maintain proper operating temperature within steady state control. Fuser page count has exceeded life.	Go to **“Fuser unit assembly removal” on page 373**.
920.51	The fuser hot roll took too long to heat up after transitioning to new enhanced mode within standby control only. Fuser page count has exceeded life. Replace the fuser unit assembly.	
920.52	The fuser hot roll fell to far below desired temperature while in standby control. Fuser page count has exceeded life. Replace the fuser unit assembly.	
920.53	The fuser hot roll is too cool while checking for slope change in standby. Fuser page count has exceeded life.	
920.54	The fuser hot roll is too cool when heating to desired temperature after slope change within standby control only. Fuser page count has exceeded life. Replace the fuser unit assembly.	

Error code	Description	Action
920.56	The fuser hot roll temperature does not increase while the lamp is turned on. Fuser page count has exceeded life. Replace the fuser unit assembly.	Go to **"Fuser unit assembly removal" on page 373**.
920.57	The fuser hot roll temperature is not maintained properly while the media in the fuser nip. Fuser page count has exceeded life. Replace the fuser unit assembly.	
920.75	Fuser does not maintain proper operating temperature within steady state control. Fuser page count has exceeded life. Replace the fuser unit assembly.	
920.76	The fuser hot roll took too long to heat up after transitioning to new enhanced mode within standby control only. Fuser page count has exceeded life. Replace the fuser unit assembly.	
920.77	The fuser hot roll fell to far below desired temperature while in standby control. Fuser page count has exceeded life. Replace the fuser unit assembly.	
920.78	The fuser hot roll is too cool while checking for slope change in standby. Fuser page count has exceeded life. Replace the fuser unit assembly.	Go to **"Fuser unit assembly removal" on page 373**.
920.79	The fuser hot roll is too cool when heating to desired temperature after slope change within standby control only. Fuser page count has exceeded life. Replace the fuser unit assembly.	
920.81	The fuser hot roll temperature does not increase while the lamp is turned on. Fuser page count has exceeded life. Replace the fuser unit assembly.	
920.82	The fuser hot roll temperature is not maintained properly while the media in the fuser nip. Fuser page count has exceeded life. Replace the fuser unit assembly.	

922.xx error messages

Error code	Description	Action
922.00	Fuser hot roll failed to reach target departure.	Go to **"Fuser (922.00, 922.25) failure service check" on page 245**.
922.02	The fuser hot roll does not reach the "beginning lamp detection" parameter in the specified time.	Go to **"Fuser (922.02–922.04 and 922.06–922.07) failure service check" on page 245**.
922.03	The fuser hot roll does not reach the "final lamp detection" parameter, but not in the specified time.	
922.04	The fuser hot roll has timed out and not reached the "final lamp detection" parameter during the specified time.	
922.05	After hot roll lamp detection, did not roll over to steady state control in time. The control code has gotten lost.	Go to **"Fuser hot roll control code service check" on page 242**.
922.06	The fuser hot roll did not reach operating temperature within new enhanced control.	Go to **"Fuser (922.02–922.04 and 922.06–922.07) failure service check" on page 245**.
922.07	The fuser hot roll did not reach operating temperature after increasing interpage gap.	
922.25	Fuser hot roll failed to reach target departure.	Go to **"Fuser (922.00, 922.25) failure service check" on page 245**.
922.27	The fuser hot roll does not reach the "beginning lamp detection" parameter in the specified time.	Go to **"Fuser (922.27–922.29, 922.31–922.32) failure service check" on page 246**.
922.28	The fuser hot roll does not reach the "final lamp detection" parameter, but not in the specified time.	
922.29	The fuser hot roll has timed out and not reached the "final lamp detection" parameter during the specified time.	
922.30	After hot roll lamp detection, did not roll over to steady state control in time. The control code has gotten lost.	Go to **"Fuser hot roll control code service check" on page 242**
922.31	The fuser hot roll did not reach operating temperature within new enhanced control.	Go to **"Fuser (922.27–922.29, 922.31–922.32) failure service check" on page 246**.
922.32	The fuser hot roll did not reach operating temperature after increasing interpage gap.	

Error code	Description	Action
922.50	Fuser hot roll failed to reach target departure. Fuser page count has exceeded life. Replace the fuser unit assembly.	Go to **“Fuser unit assembly removal” on page 373**.
922.52	The fuser hot roll does not reach the “beginning lamp detection” parameter in the specified time. Fuser page count has exceeded life. Replace the fuser unit assembly.	
922.53	The fuser hot roll does not reach the “final lamp detection” parameter, but not in the specified time. Fuser page count has exceeded life. Replace the fuser unit assembly.	
922.54	The fuser hot roll has timed out and not reached the “final lamp detection” parameter during the specified time. Fuser page count has exceeded life. Replace the fuser unit assembly.	
922.56	The fuser hot roll did not reach operating temperature within new enhanced control. Fuser page count has exceeded life. Replace the fuser unit assembly.	
922.57	The fuser hot roll did not reach operating temperature after increasing interpage gap. Fuser page count has exceeded life. Replace the fuser unit assembly.	

Error code	Description	Action
922.75	Fuser hot roll failed to reach target departure. Fuser page count has exceeded life. Replace the fuser unit assembly.	Go to **“Fuser unit assembly removal” on page 373**.
922.77	The fuser hot roll does not reach the “beginning lamp detection” parameter in the specified time. Fuser page count has exceeded life. Replace the fuser unit assembly.	
922.78	The fuser hot roll does not reach the “final lamp detection” parameter, but not in the specified time. Fuser page count has exceeded life. Replace the fuser unit assembly.	
922.79	The fuser hot roll has timed out and not reached the “final lamp detection” parameter during the specified time. Fuser page count has exceeded life. Replace the fuser unit assembly.	
922.81	The fuser hot roll did not reach operating temperature within new enhanced control. Fuser page count has exceeded life. Replace the fuser unit assembly.	
922.82	The fuser hot roll did not reach operating temperature after increasing interpage gap. Fuser page count has exceeded life. Replace the fuser unit assembly.	

923.xx–924.xx error messages

Error code	Description	Action
923.00	Fuser hot roll has exceeded the proper operating temperature.	Go to **“Fuser (923.00–923.01, 923.25–923.26) failure service check” on page 247**.
923.01	Fuser hot roll has exceeded the proper operating temperature.	
923.25	Fuser hot roll has exceeded the proper operating temperature.	
923.26	Fuser hot roll has exceeded the proper operating temperature.	

Error code	Description	Action
923.50	Fuser hot roll has exceeded the proper operating temperature. Replace the fuser unit assembly.	Go to **"Fuser unit assembly removal" on page 373**.
923.51	Fuser hot roll has exceeded the proper operating temperature. Replace the fuser unit assembly.	
923.75	Fuser hot roll has exceeded the proper operating temperature. Replace the fuser unit assembly.	
923.76	Fuser hot roll has exceeded the proper operating temperature. Replace the fuser unit assembly.	
924.00	The fuser thermistor might be faulty. Open the fuser thermistor check, and replace if necessary, the fuser unit assembly.	Go to **"Fuser unit assembly removal" on page 373**.
924.01	The fuser thermistor might be faulty. Open the fuser thermistor check, and replace if necessary, the fuser unit assembly.	
924.25	The fuser thermistor might be faulty. Open the fuser thermistor check, and replace if necessary, the fuser unit assembly.	
924.26	The fuser thermistor might be faulty. Open the fuser thermistor check, and replace if necessary, the fuser unit assembly.	
924.50	The fuser thermistor might be faulty. Fuser page count has exceeded life. Open the fuser thermistor check, and replace if necessary, the fuser unit assembly.	
924.51	The fuser thermistor might be faulty. Fuser page count has exceeded life. Open the fuser thermistor check, and replace if necessary, the fuser unit assembly.	
924.75	The fuser thermistor might be faulty. Fuser page count has exceeded life. Open the fuser thermistor check, and replace if necessary, the fuser unit assembly.	
924.76	The fuser thermistor might be faulty. Fuser page count has exceeded life. Open the fuser thermistor check, and replace if necessary, the fuser unit assembly.	

925.xx error messages

Error code	Description	Action
925.00	The machine detected a 115 V lamp in a 220 V machine. The fuser lamp has an excessive wattage rating.	Go to **"Fuser (923.00–923.01, 923.25–923.26) failure service check" on page 247**.
925.01		
925.02		
925.25		
925.26		
925.27		
925.50	The machine detected a 115 V lamp in a 220 V machine. The fuser lamp has an excessive wattage rating. Fuser page count has exceeded life.	Go to **"Fuser (923.00–923.01, 923.25–923.26) failure service check" on page 247**.
925.51		
925.52		
925.75		
925.76		
925.77		

927.xx–935.xx error messages

Error code	Description	Action
927.01	The main cooling fan is obstructed or has failed.	Go to **"Main cooling fan service check" on page 248**.
927.02	The print cartridge cooling fan is obstructed or has failed.	Go to **"Print cartridge cooling fan service check" on page 248**.
927.03	The main cooling does not reach the specified speed.	Go to **"Main cooling fan service check" on page 248**.
927.04		
927.05		
927.06		
927.07		
927.11	The print cartridge cooling fan is obstructed or has failed.	Go to **"Print cartridge cooling fan service check" on page 248**.
927.13	The print cartridge cooling fan does not reach the specified speed.	
927.14		
927.15		
927.16		
927.17		
927.21	LVPS cooling fan is obstructed or has failed.	Go to **"LVPS cooling fan service check" on page 249**.

Error code	Description	Action
929.01	The sensor (toner empty) does not provide toner level feedback or the print cartridge is damaged.	Go to **"Sensor (toner empty) service check" on page 249**.
929.02		
929.03		
930.00	Possible causes: • A non-supported printhead is installed. • Hsync signal is intermittent or noisy. • Printhead ID resistor circuit is not to spec. Replace the printhead.	Go to **"Printhead assembly removal" on page 377**.
931.00	The hsync signal is missing or not at the correct voltage.	Go to **"Printhead failure service check" on page 250**.
932.00	The hsync signal is missing or not at the correct voltage. Replace the printhead.	Go to **"Printhead assembly removal" on page 377**.
933.00		
934.00	The signals driving the polygon motor may have been corrupted, or the cable may be loose, or the motor may be bad.	Go to **"Motor (printhead polygon mirror) service check" on page 251**.
935.00		

936.xx–945.xx error messages

Error code	Description	Action
936.10	The main drive motor assembly may be faulty or has failed.	Go to **"Main drive motor assembly service check" on page 251**.
936.11		
936.20		
936.21		
936.30		
936.31	The main drive motor assembly may be faulty or has failed.	Go to **"Main drive motor assembly service check" on page 251**.
936.60		
936.61		
936.90		
936.91		
937.40	The main drive motor assembly may be faulty or has failed.	Go to **"Main drive motor assembly service check" on page 251**.
937.41		
937.50		
937.51		
937.70		

Error code	Description	Action
937.71	• The main drive motor assembly may be faulty or has failed. • The internal duplex assembly is not properly grounded to the LVPS. This only applies to machines with an installed internal duplex assembly. **Warning—Potential Damage:** Ensure that the metal frame of the internal duplex assembly is properly grounded to the metal frame of the LVPS with a jumper wire as shown in the graphic below. 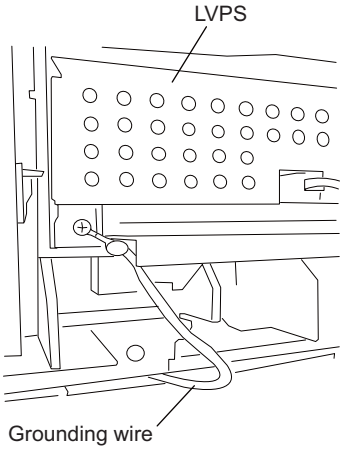 **Note:** If the jumper wire is NOT present, then install the 40X7028 internal duplex grounding kit. This should only be done for machines with an installed internal duplex assembly.	Go to **"Main drive motor assembly service check" on page 251**.
937.80	The main drive motor assembly may be faulty or has failed.	Go to **"Main drive motor assembly service check" on page 251**.
937.81		
940.00	LVPS zero cross test fails. Replace the LVPS card assembly.	Go to **"LVPS card assembly removal" on page 328**.
945.xx	The image processing ASIC or DRAM has failed. **1** POR the machine. **2** If the problem remains, replace the scanner controller card.	Go to **"Scanner controller card assembly removal (models X651, X652, X654, and X656)" on page 520** or **"Scanner controller card assembly removal (model X658)" on page 517**

950.xx–990.xx error messages

Error code	Description	Action
950.00–950.29	Mismatch between system card EEPROM and operator panel mirror.	Go to **"NVRAM mismatch (950.00 through 950.29) service check" on page 252**.
950.30–950.60	Mismatch between secure and system.	

Error code	Description	Action
952.xx	A recoverable NVRAM Cyclic Redundancy Check (CRC) error occurred.	Go to **"NVRAM Cyclic Redundancy Check error service check" on page 252**.
953.xx	The NVRAM chip has failed on the scanner interface card assembly. Replace the scanner interface card assembly.	Go to **"Scanner interface card assembly removal" on page 508**.
954.xx	NVRAM chip failure with system card assembly. Replace the system card assembly.	Go to **"System card assembly removal" on page 321**.
955.xx	The Code ROM or NAND Flash failed the Cyclic Redundancy Check (CRC) or the NAND experienced an uncorrectable multi-bit failure. Replace the system card assembly.	
956.xx	The processor has failed on the system card assembly. Replace the system card assembly.	
956.01	The system card processor is over temperature or is damaged. Replace the system card assembly.	
957.xx	The ASIC has failed on the system card assembly. Replace the system card assembly.	
958.xx	Printer has performed more than 100 "shift and reflash" operations as a result of ECC bit corrections. Replace the system card assembly.	
959.xx	The system card cannot properly authenticate the print cartridge or the authentication process has failed. Replace the system card assembly.	
960.xx	RAM memory error: RAM soldered on the card is bad.	Go to **"RAM memory error service check" on page 253**
961.xx	RAM memory error: Slot 1 RAM is bad.	
962.xx	RAM memory error: Slot 2 RAM is bad.	
963.xx	RAM memory error: Slot 3 RAM is bad.	
964.xx	The download emulation Cyclic Redundancy Check (CRC) detected a failure. Disable the download emulation, and then program the download emulation into the firmware card again. If the problem remains, replace the system card assembly.	Go to **"System card assembly removal" on page 321**.
975.xx	The system detected an unrecognizable network port.	N/A
976.xx	The system detected an unrecoverable software error network port.	N/A

Error code	Description	Action
978.xx	The system detected a bad checksum while programming a network port.	N/A
979.xx	The flash parts failed while programming a network port.	N/A
982.04	An output option was not fully seated onto the printer or has been removed while the main power is turned on.	Go to **“Output option is missing service check” on page 253**.
982.07	Exceeded the maximum number of input or output options.	Go to **“Too many options installed service check” on page 254**.
982.13	The printer has detected a hot plug of an optional device. Low-level error on paper port.	Go to **“The printer has detected a hot plug service check” on page 254**.
990.00	Output option rear door is not fully closed.	Go to **“Rear doors are open service check” on page 254**.
990.51	The HCIT tray lift motor does not operate at the specified speed reported by tray [x].	Go to **“Motor (HCIT tray lift) service check” on page 253**.
990.53	The HCIT tray lift motor does not reach the specified speed at the specified time.	
990.54	The HCIT tray lift motor is not reporting pulses back to the engine.	

System software (900.xx) error service check

There are different types of 900.xx errors that can occur. There may be a communication problem (bad cable, network connection, and so on), software issue, or a hardware problem with the controller board. The communication and software aspects should be checked first. Determine if the problem is constant or intermittent. Use the troubleshooting procedure below to associate the issue. Take any notes as instructed. You will need that information in the event you need to contact your next level of support.

Note: Before troubleshooting, determine the operating system used when the error occurred. If possible, determine whether a PostScript or PCL file was sent to the device when the error occurred. Ask the customer which Lexmark Solutions applications are installed on the device.

Action	Yes	No
Step 1 POR the device. Does the problem remain?	Go to step 2.	The problem is solved.
Step 2 **a** Write down the exact 900.xx error code displayed on the device. **b** Turn off the device. **c** Clear the print queues. **d** Disconnect all communication cables, and then remove all memory options. **e** Remove all ISP and modem cards. **f** Restart the device into diagnostic mode. Does the problem remain?	Go to step 3.	Go to step 5.
Step 3 **a** Check all the cables connected to the RIP board for proper connectivity. **b** Properly connect the cables to the RIP board. **c** Restart the device into diagnostic mode. Does the problem remain?	Go to step 4.	Go to step 5.
* Before contacting your next level of support, make you have the following information and materials: • Exact 900.xx error digits and complete error message • Printed menu settings page • Printed network settings page • Device error log • A sample print file if error appears to be isolated to a single file • File/application used if error is related to a specific print file • Device operating system • Driver used (PCL/PS) • Frequency of the occurrence of the error		

Action	Yes	No
Step 4 Replace the RIP board, and then restart the device. **Note:** If an error displayed is different from the original 900.xx, then consult the service check for that error. Does the problem remain?	Contact the next level of support*.	The problem is solved.
Step 5 Print the following: • Error log • Menu settings page • Network settings page Does the problem remain?	Contact the next level of support*.	Go to step 6.
Step 6 **a** Reattach the communications cable, and then restart the printer to operating mode. **b** Send the printer a print job. **Note:** Before performing this step, write down this information about the file being sent to the printer. • Application used • Operating system • Driver type • File type (PCL, PostScript, XPS, etc.) Does the problem remain?	Go to step 7.	Go to step 8.
Step 7 **a** Upgrade the firmware. Contact your next level of support for the correct firmware level to use. **b** Restart the printer to operating mode. **c** Send the printer a print job. Does the problem remain?	Contact the next level of support*.	Go to step 8.

* Before contacting your next level of support, make you have the following information and materials:

- Exact 900.xx error digits and complete error message
- Printed menu settings page
- Printed network settings page
- Device error log
- A sample print file if error appears to be isolated to a single file
- File/application used if error is related to a specific print file
- Device operating system
- Driver used (PCL/PS)
- Frequency of the occurrence of the error

Action	Yes	No
Step 8 Is the device a multifunction printer?	Go to step 9.	Go to step 11.
Step 9 Run a copy job. Does the problem remain?	Contact the next level of support*.	Go to step 10.
Step 10 Run a scan-to-PC job. Does the problem remain?	Contact the next level of support*.	Go to step 11.
Step 11 Is there an installed optional memory card?	Go to step 12.	Go to step 13.
Step 12 Reinstall the optional memory card, and then send a print job to the device. Does the problem remain?	Go to step 13.	Go to step 14.
Step 13 Install a Lexmark-recommended memory option, and then send a print job to the device. Does the problem remain?	Contact the next level of support*.	The problem is solved.
Step 14 Is there a modem installed on the device?	Go to step 15.	Go to step 19.
Step 15 Reinstall the modem, and restart the device. Does the problem remain?	Go to step 16.	Go to step 18.

* Before contacting your next level of support, make you have the following information and materials:

- Exact 900.xx error digits and complete error message
- Printed menu settings page
- Printed network settings page
- Device error log
- A sample print file if error appears to be isolated to a single file
- File/application used if error is related to a specific print file
- Device operating system
- Driver used (PCL/PS)
- Frequency of the occurrence of the error

Action	Yes	No
Step 16 **a** Upgrade the firmware. Contact your next level of support for the correct firmware level to use. **b** Restart the printer to operating mode. **c** Send the printer a print job. Does the problem remain?	Go to step 17.	The problem is solved.
Step 17 Replace the modem, and then restart the device. Does the problem remain?	Contact the next level of support*.	The problem is solved.
Step 18 Run a fax job. Does the problem remain?	Contact the next level of support*.	Go to step 19.
Step 19 Are there any ISP (internal solutions port) options installed?	Go to step 20.	The problem is solved.
Step 20 **a** Reinstall the first ISP option, and then restart the device. **b** Run a job to test the option. Does the problem remain?	Go to step 21.	Go to step 23.
Step 21 **a** Upgrade the firmware. Contact your next level of support for the correct firmware level to use. **b** Restart the printer to operating mode. **c** Send the printer a print job. Does the problem remain?	Go to step 22.	The problem is solved.

* Before contacting your next level of support, make you have the following information and materials:

- Exact 900.xx error digits and complete error message
- Printed menu settings page
- Printed network settings page
- Device error log
- A sample print file if error appears to be isolated to a single file
- File/application used if error is related to a specific print file
- Device operating system
- Driver used (PCL/PS)
- Frequency of the occurrence of the error

Action	Yes	No
Step 22 **a** Replace the faulty ISP option, and then restart the device. **b** Run a job to test the new option. Does the problem remain?	Contact the next level of support*.	Go to step 23.
Step 23 Are there any more ISP options to install?	Go to step 24.	The problem is solved.
Step 24 **a** Install the next ISP option, and then restart the device. **b** Run a job to test the new option.	Go to step 25.	Go to step 23.
Step 25 **a** Upgrade the firmware. Contact your next level of support for the correct firmware level to use. **b** Restart the printer to operating mode. **c** Send the printer a print job. Does the problem remain?	Go to step 26.	Go to step 23.
Step 26 **a** Replace the faulty ISP option, and then restart the device. **b** Run a job to test the new option. Does the problem remain?	Contact the next level of support*.	The problem is solved.

* Before contacting your next level of support, make you have the following information and materials:

- Exact 900.xx error digits and complete error message
- Printed menu settings page
- Printed network settings page
- Device error log
- A sample print file if error appears to be isolated to a single file
- File/application used if error is related to a specific print file
- Device operating system
- Driver used (PCL/PS)
- Frequency of the occurrence of the error

System software (901.xx) error service check

Action	Yes	No
Step 1 **a** POR the machine, and then print a simple test page to determine if the problem is firmware related, or if the customer is sending a corrupted print job. **b** Do the necessary steps to correct the issue. Does the problem remain?	Go to step 2.	The problem is solved.
Step 2 Check all the connections on the system card assembly, and if necessary, replace the connections. Does the problem remain?	Go to step 3.	The problem is solved.
Step 3 Replace the system card assembly. Go to **"System card assembly removal" on page 321**. Does the problem remain?	Contact the next level of support.	The problem is solved.

System software (902.xx) error service check

Action	Yes	No
Step 1 **a** POR the machine, and then print a simple test page to determine if the problem is system software related, or if the customer is sending a corrupted print job. **b** Do the necessary steps to correct the issue. Does the problem remain?	Go to step 2.	The problem is solved.
Step 2 Check all the connections on the system card assembly, and if necessary, replace the connections. Does the problem remain?	Go to step 3.	The problem is solved.
Step 3 Replace the system card assembly. Go to **"System card assembly removal" on page 321**. Does the problem remain?	Contact the next level of support.	The problem is solved.

Paperport link driver error service check

Action	Yes	No
Step 1 **a** POR the machine, and then print a simple test page to determine if the problem is system software related, or if the customer is sending a corrupted print job. **b** Do the necessary steps to correct the issue. Does the problem remain?	Go to step 2.	The problem is solved.
Step 2 Check all the connections on the system card assembly, and if necessary, replace the connections. Does the problem remain?	Go to step 3.	The problem is solved.
Step 3 Replace the system card assembly. Go to **"System card assembly removal" on page 321**. Does the problem remain?	Contact the next level of support.	The problem is solved.

RIP interface error service check

Action	Yes	No
Step 1 **a** POR the machine, and then print a simple test page to determine if the problem is system software related, or if the customer is sending a corrupted print job. **b** Do the necessary steps to correct the issue. Does the problem remain?	Go to step 2.	The problem is solved.
Step 2 Check all the connections on the system card assembly, and if necessary, replace the connections. Does the problem remain?	Go to step 3.	The problem is solved.
Step 3 Replace the system card assembly. Go to **"System card assembly removal" on page 321**. Does the problem remain?	Contact the next level of support.	The problem is solved.

Paperport device interface error service check

Action	Yes	No
Step 1 **a** POR the machine, and then print a simple test page to determine if the problem is system software related, or if the customer is sending a corrupted print job. **b** Do the necessary steps to correct the issue. Does the problem remain?	Go to step 2.	The problem is solved.
Step 2 Check all the connections on the system card assembly, and if necessary, replace the connections. Does the problem remain?	Go to step 3.	The problem is solved.
Step 3 Replace the system card assembly. Go to **"System card assembly removal" on page 321**. Does the problem remain?	Contact the next level of support.	The problem is solved.

RIP interface driver error service check

Action	Yes	No
Step 1 **a** POR the machine, and then print a simple test page to determine if the problem is system software related, or if the customer is sending a corrupted print job. **b** Do the necessary steps to correct the issue. Does the problem remain?	Go to step 2.	The problem is solved.
Step 2 Check all the connections on the system card assembly, and if necessary, replace the connections. Does the problem remain?	Go to step 3.	The problem is solved.
Step 3 Replace the system card assembly. Go to **"System card assembly removal" on page 321**. Does the problem remain?	Contact the next level of support.	The problem is solved.

Pick arm motor service check

Action	Yes	No
Step 1 Check all the connections on the pick arm assembly, and if necessary, replace the connections. Does the problem remain?	Go to step 2.	The problem is solved.
Step 2 Check all the connections on the system card assembly, and if necessary, replace the connections. Does the problem remain?	Go to step 3.	The problem is solved.
Step 3 Replace the pick arm assembly. Go to **"Pick arm assembly removal" on page 359**. Does the problem remain?	Contact the next level of support.	The problem is solved.

Redrive motor assembly service check

Action	Yes	No
Step 1 Check all the connections on the redrive motor assembly, and if necessary, replace the connections. Does the problem remain?	Go to step 2.	The problem is solved.
Step 2 Check all the connections on the system card assembly, and if necessary, replace the connections. Does the problem remain?	Go to step 3.	The problem is solved.
Step 3 Replace the redrive motor assembly. Go to **"Redrive motor assembly removal" on page 379**. Does the problem remain?	Contact the next level of support.	The problem is solved.

Transfer problem service check

Action	Yes	No
Step 1 Check the HVPS. Does the problem remain?	Go to step 2.	The problem is solved.
Step 2 Check the system board. Does the problem remain?	Go to step 3.	The problem is solved.
Step 3 Check the HVPS, input sensor, and toner sensor cable. Does the problem remain?	Go to step 4.	The problem is solved.
Step 4 **a** Check the voltage at J20-4. **Note:** The voltage changes from +24 V dc (with the printer idle) to 0 V dc (when the printer runs the print test). **b** If the voltage is incorrect, then check the continuity of line J20-4 in the front cable harness to the HVPS. **c** If there is no continuity, then replace the cable harness and the HVPS if necessary. Go to **"HVPS card assembly removal" on page 324**. Does the problem remain?	Go to step 5.	The problem is solved.
Step 5 Replace the system card. Go to **"System card assembly removal" on page 321**. Does the problem remain?	Contact the next level of support.	The problem is solved.

Internal duplex drive motor service check

Action	Yes	No
Step 1 Check all the connections on the duplex drive motor assembly, and if necessary, replace the connections. Does the problem remain?	Go to step 2.	The problem is solved.
Step 2 Check all the connections on the system card assembly, and if necessary, replace the connections. Does the problem remain?	Go to step 3.	The problem is solved.

Action	Yes	No
Step 3 Replace the duplex drive motor assembly. Go to **"Duplex drive motor assembly removal" on page 370**. Does the problem remain?	Contact the next level of support.	The problem is solved.

Fuser hot roll control code service check

Action	Yes	No
Turn off the machine, and then turn it back on. Does the problem remain?	Contact the next level of support.	The problem is solved.

Fuser (920.00–920.04) failure service check

Action	Yes	No
Step 1 Turn off the machine, and then turn it back on. Does the problem remain?	Go to step 2.	The problem is solved.
Step 2 Check if the fuser unit assembly is properly installed. Does the problem remain?	Go to step 3.	The problem is solved.
Step 3 Check if the proper voltage fuser is installed in the machine. Does the problem remain?	Go to step 4.	The problem is solved.
Step 4 Replace the fuser unit assembly. Go to **"Fuser unit assembly removal" on page 373**. Does the problem remain?	Contact the next level of support.	The problem is solved.

Fuser (920.06) failure service check

Action	Yes	No
Step 1 Turn off the machine, and then turn it back on. Does the problem remain?	Go to step 2.	The problem is solved.
Step 2 Check if the proper voltage fuser is installed in the machine. Does the problem remain?	Go to step 3.	The problem is solved.
Step 3 Check all connections on the fuser and LVPS card assembly. Does the problem remain?	Go to step 4.	The problem is solved.
Step 4 Check if the proper voltage setting is being used on the switchable LVPS assembly. Does the problem remain?	Go to step 5.	The problem is solved.
Step 5 Replace the fuser unit assembly. Go to **"Fuser unit assembly removal" on page 373**. Does the problem remain?	Go to step 6.	The problem is solved.
Step 6 Replace the LVPS card assembly. Go to **"LVPS card assembly removal" on page 328**. Does the problem remain?	Contact the next level of support.	The problem is solved.

Fuser (920.07, 920.31, 920.32) failure service check

Action	Yes	No
Step 1 Turn off the machine, and then turn it back on. Does the problem remain?	Go to step 2.	The problem is solved.
Step 2 Check if the proper voltage fuser is installed in the machine. Does the problem remain?	Go to step 3.	The problem is solved.

Action	Yes	No
Step 3 Check all connections on the fuser and LVPS card assembly. Does the problem remain?	Go to step 4.	The problem is solved.
Step 4 Replace the fuser unit assembly. Go to **"Fuser unit assembly removal" on page 373**. Does the problem remain?	Go to step 5.	The problem is solved.
Step 5 Replace the LVPS card assembly. Go to **"LVPS card assembly removal" on page 328**. Does the problem remain?	Contact the next level of support.	The problem is solved.

Fuser (920.25–920.29) failure service check

Action	Yes	No
Step 1 Turn off the machine, and then turn it back on. Does the problem remain?	Go to step 2.	The problem is solved.
Step 2 Check if the fuser unit assembly is properly installed. Does the problem remain?	Go to step 3.	The problem is solved.
Step 3 Check if the proper voltage fuser is installed in the machine. Does the problem remain?	Go to step 4.	The problem is solved.
Step 4 Replace the fuser unit assembly. Go to **"Fuser unit assembly removal" on page 373**. Does the problem remain?	Contact the next level of support.	The problem is solved.

Fuser (922.00, 922.25) failure service check

Action	Yes	No
Step 1 Turn off the machine, and then turn it back on. Does the problem remain?	Go to step 2.	The problem is solved.
Step 2 Check if the fuser unit assembly is properly installed. Does the problem remain?	Go to step 3.	The problem is solved.
Step 3 Check if the proper voltage fuser is installed in the machine. Does the problem remain?	Go to step 4.	The problem is solved.
Step 4 Replace the fuser unit assembly. Go to **"Fuser unit assembly removal" on page 373**. Does the problem remain?	Contact the next level of support.	The problem is solved.

Fuser (922.02–922.04 and 922.06–922.07) failure service check

Action	Yes	No
Step 1 Turn off the machine, and then turn it back on. Does the problem remain?	Go to step 2.	The problem is solved.
Step 2 Check if the proper voltage fuser is installed in the machine. Does the problem remain?	Go to step 3.	The problem is solved.
Step 3 Check all connections on the fuser and LVPS card assembly. Does the problem remain?	Go to step 4.	The problem is solved.
Step 4 Check if the proper voltage setting is being used on the switchable LVPS assembly. Does the problem remain?	Go to step 5.	The problem is solved.

Action	Yes	No
Step 5 Replace the fuser unit assembly. Go to **"Fuser unit assembly removal" on page 373**. Does the problem remain?	Go to step 6.	The problem is solved.
Step 6 Replace the LVPS card assembly. Go to **"LVPS card assembly removal" on page 328**. Does the problem remain?	Contact the next level of support.	The problem is solved.

Fuser (922.27–922.29, 922.31–922.32) failure service check

Action	Yes	No
Step 1 Turn off the machine, and then turn it back on. Does the problem remain?	Go to step 2.	The problem is solved.
Step 2 Check if the proper voltage fuser is installed in the machine. Does the problem remain?	Go to step 3.	The problem is solved.
Step 3 Check all connections on the fuser and LVPS card assembly. Does the problem remain?	Go to step 4.	The problem is solved.
Step 4 Check if the proper voltage setting is being used on the switchable LVPS assembly. Does the problem remain?	Go to step 5.	The problem is solved.
Step 5 Replace the fuser unit assembly. Go to **"Fuser unit assembly removal" on page 373**. Does the problem remain?	Go to step 6.	The problem is solved.
Step 6 Replace the LVPS card assembly. Go to **"LVPS card assembly removal" on page 328**. Does the problem remain?	Contact the next level of support.	The problem is solved.

Fuser (923.00–923.01, 923.25–923.26) failure service check

Action	Yes	No
Step 1 Turn off the machine, and then turn it back on. Does the problem remain?	Go to step 2.	The problem is solved.
Step 2 Check if the fuser unit assembly is properly installed. Does the problem remain?	Go to step 3.	The problem is solved.
Step 3 Check if the proper voltage fuser is installed in the machine. Does the problem remain?	Go to step 4.	The problem is solved.
Step 4 Replace the fuser unit assembly. Go to **"Fuser unit assembly removal" on page 373**. Does the problem remain?	Contact the next level of support.	The problem is solved.

Fuser (925.xx) failure service check

Action	Yes	No
Step 1 Turn off the machine, and then turn it back on. Does the problem remain?	Go to step 2.	The problem is solved.
Step 2 Check if the fuser unit assembly is properly installed. Does the problem remain?	Go to step 3.	The problem is solved.
Step 3 Check if the proper voltage fuser is installed in the machine. Does the problem remain?	Go to step 4.	The problem is solved.
Step 4 Replace the fuser unit assembly. Go to **"Fuser unit assembly removal" on page 373**. Does the problem remain?	Contact the next level of support.	The problem is solved.

Main cooling fan service check

Action	Yes	No
Step 1 Check for cooling fan obstructions. Does the problem remain?	Go to step 2.	The problem is solved.
Step 2 Check the connections on the main cooling fan, and replace the connections if necessary. Does the problem remain?	Go to step 3.	The problem is solved.
Step 3 Replace the main cooling fan. Go to **"Main cooling fan removal" on page 311**. Does the problem remain?	Contact the next level of support.	The problem is solved.

Print cartridge cooling fan service check

Action	Yes	No
Step 1 Check for cooling fan obstructions. Does the problem remain?	Go to step 2.	The problem is solved.
Step 2 Check the connections on the main cooling fan, and replace the connections if necessary. Does the problem remain?	Go to step 3.	The problem is solved.
Step 3 Replace the print cartridge cooling fan. Go to **"Print cartridge cooling fan removal" on page 331**. Does the problem remain?	Contact the next level of support.	The problem is solved.

LVPS cooling fan service check

Action	Yes	No
Step 1 Check for cooling fan obstructions. Does the problem remain?	Go to step 2.	The problem is solved.
Step 2 Check the connections on the main cooling fan, and replace the connections if necessary. Does the problem remain?	Go to step 3.	The problem is solved.
Step 3 Replace the LVPS cooling fan. Go to **"LVPS cooling fan removal" on page 330**. Does the problem remain?	Contact the next level of support.	The problem is solved.

Sensor (toner empty) service check

Action	Yes	No
Step 1 **a** Check the sensor (toner empty) for proper installation. **b** If necessary, remove and then reinstall the sensor. Does the problem remain?	Go to step 2.	The problem is solved.
Step 2 Check the sensor (toner empty) for proper operation. **a** Enter the Diagnostics menu. **b** Select **Base sensor test** > **Sensor tests**. **c** Observe the line item, "toner empty." Does the display on the operator panel change every time the sensing area of the sensor is interrupted or blocked?	The problem is solved.	Go to step 3.
Step 3 **a** Check the sensor (toner empty) for proper connection. **b** Replace the connection, if necessary. Does the problem remain?	Go to step 4.	The problem is solved.
Step 4 Replace the sensor (toner empty). Go to **"Sensor (toner empty) removal" on page 333**. Does the problem remain?	Go to step 5.	The problem is solved.

Action	Yes	No
Step 5 Check the toner pulse wheel on the print cartridge for damage, and if necessary, replace the cartridge. Does the problem remain?	Contact the next level of support.	The problem is solved.

Printhead failure service check

Action	Yes	No
Step 1 Check all connections on the printhead assembly for proper connectivity. Does the problem remain?	Go to step 2.	The problem is solved.
Step 2 Check all connections on the system card assembly for proper connectivity. Does the problem remain?	Go to step 3.	The problem is solved.
Step 3 Check all printhead connections for possible damage and poor continuity. Does the problem remain?	Go to step 4.	The problem is solved.
Step 4 Replace the system card assembly. Go to **"System card assembly removal" on page 321**. Does the problem remain?	Go to step 5.	The problem is solved.
Step 5 Replace the printhead assembly. Go to **"Printhead assembly removal" on page 377**. Does the problem remain?	Contact the next level of support.	The problem is solved.

Motor (printhead polygon mirror) service check

Action	Yes	No
Step 1 Check all connections on the printhead assembly for proper connectivity. Does the problem remain?	Go to step 2.	The problem is solved.
Step 2 Check all connections on the system card assembly for proper connectivity. Does the problem remain?	Go to step 3.	The problem is solved.
Step 3 Replace the printhead assembly. Go to **"Printhead assembly removal" on page 377**. Does the problem remain?	Contact the next level of support.	The problem is solved.

Main drive motor assembly service check

Action	Yes	No
Step 1 Check all connections on the system card assembly for proper connectivity. Does the problem remain?	Go to step 2.	The problem is solved.
Step 2 Check all connections on the main drive motor assembly. Does the problem remain?	Go to step 3.	The problem is solved.
Step 3 Replace the main drive motor assembly. Go to **"Main drive motor assembly removal" on page 312**. Does the problem remain?	Go to step 4.	The problem is solved.
Step 4 Replace the system card assembly. Go to **"System card assembly removal" on page 321**. Does the problem remain?	Contact the next level of support.	The problem is solved.

NVRAM Cyclic Redundancy Check error service check

Action	Yes	No
Turn off the machine, and then turn it back on. This resets the error condition. Does the problem remain?	Contact the next level of support.	The problem is solved.

NVRAM mismatch (950.00 through 950.29) service check

Warning—Potential Damage: When replacing the scanner interface card assembly and the system card assembly, make sure to:

- Replace only one component at a time.
- Perform a POR every after each component is replaced.

If this procedure is not followed, then the printer will be rendered inoperable.

These components can be used as a method of troubleshooting as long as the machine is booted into diagnostic mode or is operating in diagnostic mode. Once a component has been installed in a machine and powered up into user mode, it cannot be used in another machine. It must be returned to the manufacturer.

Action	Yes	No
Step 1 Check the operator panel assembly. Was the operator panel assembly recently replaced?	Go to step 3.	Go to step 2.
Step 2 Check the system card assembly. Was the system card assembly recently replaced?	Go to step 4.	Contact the next level of support.
Step 3 Replace the current operator panel assembly with the original operator panel assembly. Does the problem remain?	Go to step 5.	The problem is solved.
Step 4 Replace the current system card assembly with the original system card assembly. Go to **"System card assembly removal" on page 321**. Does the problem remain?	Go to step 6.	The problem is solved.
Step 5 Replace the original operator panel assembly with a new and not previously installed operator panel assembly. Does the problem remain?	Contact the next level of support.	The problem is solved.

Action	Yes	No
Step 6 Replace the original operator panel assembly with a new and not previously installed operator panel door assembly or the operator panel assembly. Go to **"Operator panel door assembly removal (models X651, X652, X654,X656)" on page 345** or **"Operator panel assembly removal (model X658)" on page 349**. Does the problem remain?	Contact the next level of support.	The problem is solved.

Motor (HCIT tray lift) service check

Action	Yes	No
Step 1 Check and remove all obstructions in the HCIT lift area. Does the problem remain?	Go to step 2.	The problem is solved.
Step 2 Check the connections on the HCIT tray lift motor assembly for proper connections. Does the problem remain?	Go to step 3.	The problem is solved.
Step 3 Replace the HCIT tray lift drive motor assembly. Go to **"High capacity input tray (HCIT) tray lift drive motor assembly removal" on page 427**. Does the problem remain?	Contact the next level of support.	The problem is solved.

RAM memory error service check

Action	Yes	No
Replace the appropriate module. Does the problem remain?	Contact the next level of support.	The problem is solved.

Output option is missing service check

Action	Yes	No
Step 1 **a** Turn off the main power. **b** Remove, and then reinstall the output option. Does the problem remain?	Go to step 2.	The problem is solved.

Action	Yes	No
Step 2 Check all the output option interface connections, and if necessary, replace the connections. Does the problem remain?	Contact the next level of support.	The problem is solved.

Too many options installed service check

Action	Yes	No
Remove the appropriate input or output options. Does the problem remain?	Contact the next level of support.	The problem is solved.

The printer has detected a hot plug service check

Action	Yes	No
a Turn off the printer, and then install all the options. **b** Turn the printer back on. Does the problem remain?	Contact the next level of support.	The problem is solved.

Rear doors are open service check

Action	Yes	No
Close the rear door on all output options. Does the problem remain?	Contact the next level of support.	The problem is solved.

Service menus

Understanding the ADF and scanner glass

Automatic Document Feeder (ADF)	Scanner glass
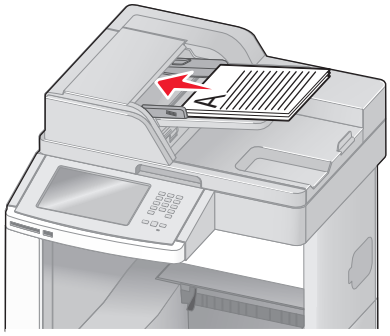	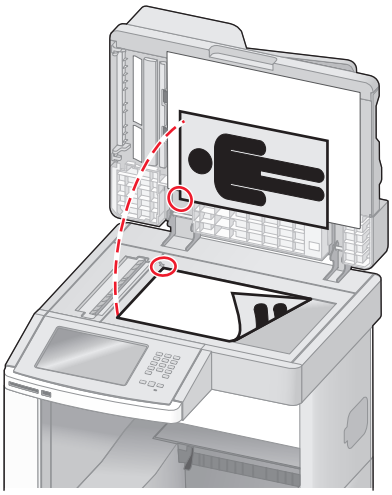
Use the ADF for multiple-page documents.	Use the scanner glass for single pages, small items (such as postcards or photos), transparencies, photo paper, or thin media (such as magazine clippings or lightweight carbonless forms).

You can use the ADF or the scanner glass to scan documents.

Using the ADF

The Automatic Document Feeder (ADF) can scan multiple pages, including duplex pages. When using the ADF:

- Load the document into the ADF faceup, short edge first.
- Load up to 75 sheets of plain paper in the ADF input tray.
- Scan sizes from 76.2 x 139.4 mm (3.0 x 5.5 in.) to 215.9 x 355.6 mm (8.5 x 14 in.).
- Scan documents with mixed page sizes (letter and legal).
- Scan media weights from 52 to 120 g/m^2 (14 to 32 lb).
- Do not load postcards, photos, small items, transparencies, photo paper, or thin media (such as magazine clippings) into the ADF. Place these items on the scanner glass.

Using the scanner glass

The scanner glass can be used to scan or copy single pages or book pages. When using the scanner glass:

- Place a document facedown on the scanner glass in the upper left corner.
- Scan or copy documents up to 215.9 x 355.6 mm (8.5 x 14 in.).
- Copy books up to 25.3 mm (1 in.) thick.

Understanding the printer control panel

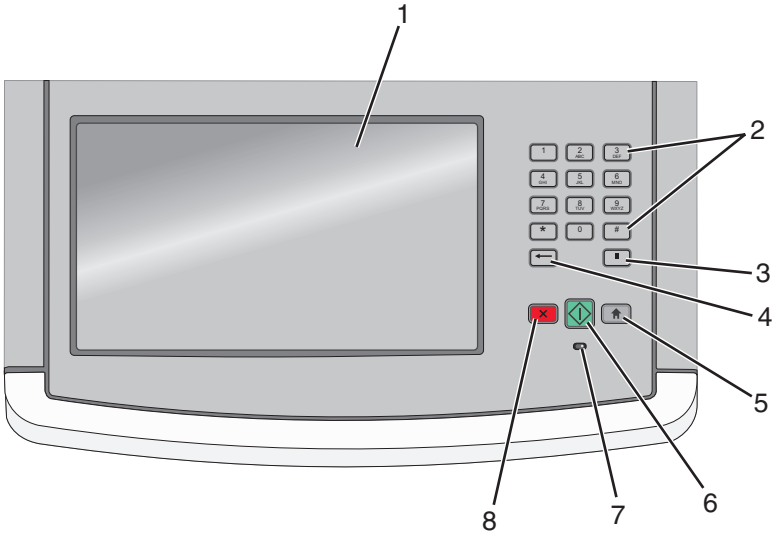

Item		Description
1	Display	View scanning, copying, faxing, and printing options as well as status and error messages.
2	Keypad	Enter numbers or symbols on the display.
3	Dial Pause	• Press to cause a two- or three-second dial pause in a fax number. In the Fax To field, a Dial Pause is represented by a comma (,). • From the home screen, press to redial a fax number. • The button functions only within the Fax menu or with fax functions. When outside of the Fax menu, fax function, or home screen, pressing causes an error beep.
4	Back	In the Copy menu, press to delete the right-most digit of the value in the Copy Count. The default value of 1 appears if the entire number is deleted by pressing numerous times. In the Fax Destination List, press to delete the right-most digit of a number entered manually. You can also press to delete an entire shortcut entry. Once an entire line is deleted, another press of causes the cursor to move up one line. In the E-mail Destination List, press to delete the character to the left of the cursor. If the character is in a shortcut, then the shortcut is deleted.
5	Home	Press to return to the home screen.

Item		Description
6	Start	• Press to initiate the current job indicated on the display. • From the home screen, press to start a copy job with the default settings. • If pressed while a job is scanning, the button has no effect.
7	Indicator light	Indicates the printer status: • **Off**—The power is off. • **Blinking green**—The printer is warming up, processing data, or printing. • **Solid green**—The printer is on, but idle. • **Blinking red**—Operator intervention is needed.
8	Stop	Stops all printer activity A list of options is offered once **`Stopped`** appears on the display.

Understanding the home screen

After the printer is turned on and a short warm-up period occurs, the display shows the following basic screen which is referred to as the home screen. Use the home screen buttons to initiate an action such as copying, faxing, or scanning; to open the menu screen; or to respond to messages.

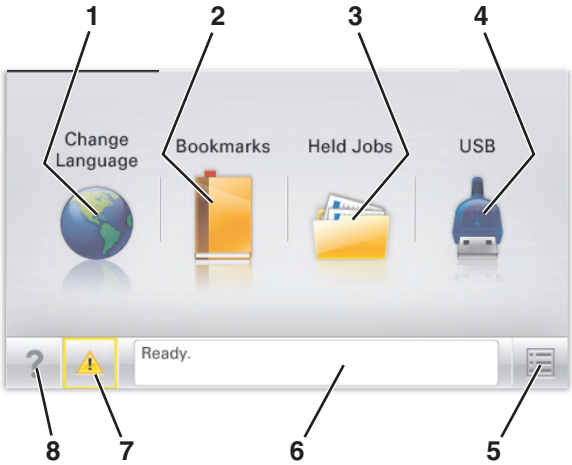

Display item		Description
1	Copy	Opens the Copy menus **Note:** From the home screen, you can also access the Copy menus by pressing a number on the keypad.
2	E-mail	Opens the E-mail menus
3	Menus	Opens the menus. These menus are available only when the printer is in the **`Ready`** state.
4	FTP	Opens the File Transfer Protocol (FTP) menus **Note:** This function must be set up by your system support person. Once it is set up, it appears as a display item.

Display item		Description
5	Status message bar	• Shows the current printer status such as **`Ready`** or **`Busy`**. • Shows printer conditions such as **`Toner Low`**. • Shows intervention messages to give instructions on what you should do so the printer can continue processing, such as **`Close door`** or **`Insert print cartridge`**.
6	Status/Supplies	Appears on the display whenever the printer status includes a message requiring intervention. Touch it to access the messages screen for more information on the message, including how to clear it.
7	Tips	All menus have a Tips button. Tips is a context-sensitive Help feature within the display touch screens.
8	Fax	Opens the Fax menus

Other buttons that may appear on the home screen:

Display item	Function
Release Held Faxes	If this button is shown, then there are held faxes with a scheduled hold time previously set. To access the list of held faxes, touch this button.
Search Held Jobs	Searches on any of the following items and returns search results: • User names for held or confidential print jobs • Job names for held jobs, excluding confidential print jobs • Profile names • Bookmark container or job names • USB container or job names for supported extensions only
Held Jobs	Opens a screen containing all the held jobs
Lock Device	This button appears on the screen when the printer is unlocked and Device Lockout Personal Identification Number (PIN) has been set. Touching this button opens a PIN entry screen. Entering the correct PIN locks the printer control panel (touch screen and hard buttons).
Unlock Device	This button appears on the screen when the printer is locked. The printer control panel buttons and shortcuts cannot be used while it appears. Touching this button opens a PIN entry screen. Entering the correct PIN unlocks the printer control panel (touch screen and hard buttons).

Display item	Function
Cancel Jobs	Opens the Cancel Jobs screen. The Cancel Jobs screen shows three headings: Print, Fax, and Network. The following items are available under the Print, Fax, and Network headings: • Print job • Copy job • Fax profile • FTP • E-mail send Each heading has a list of jobs shown in a column under it which can show only three jobs per screen. Each job appears as a button which you can touch to access information about the job. If more than three jobs exist in a column, then an arrow appears enabling you to scroll through the jobs.

Using the touch-screen buttons

Note: Depending on your options and administrative setup, your screens and buttons may vary from those shown.

Sample touch screen

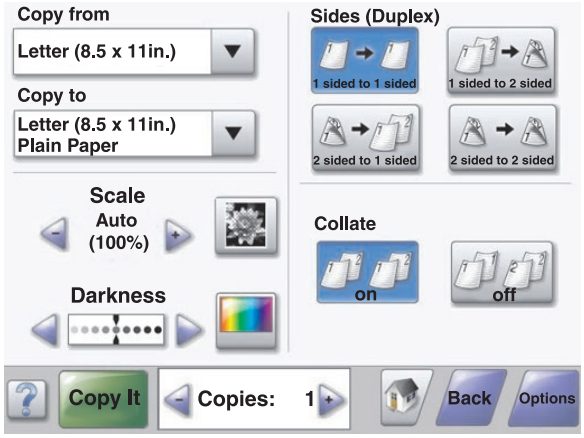

Button	Function
Home 	Returns to the home screen
Scroll down 	Opens a drop-down list

Button	Function
Left scroll decrease 	Scrolls to another value in decreasing order
Right scroll increase 	Scrolls to another value in increasing order
Left arrow 	Scrolls left
Right arrow 	Scrolls right
Submit 	Saves a value as the new user default setting
Back 	Navigates back to the previous screen

Other touch-screen buttons

Button	Function
Down arrow 	Moves down to the next screen
Up arrow 	Moves up to the next screen

Button	Function
Unselected radio button 	This is an unselected radio button. The radio button is gray to show it is unselected.
Selected radio button 	This is a selected radio button. The radio button is blue to show it is selected.
Cancel Jobs 	Opens the Cancel Jobs screen. The Cancel Jobs screen shows three headings: Print, Fax, and Network. The following items are available under the Print, Fax, and Network headings: • Print job • Copy job • Fax profile • FTP • E-mail send Each heading has a list of jobs shown in a column under it which can show only three jobs per screen. Each job appears as a button which you can touch to access information about the job. If more than three jobs exist in a column, then an arrow appears enabling you to scroll through the jobs.
Continue 	Touch this button when more changes need to be made for a job or after clearing a paper jam.
Cancel 	• Cancels an action or a selection • Cancels out of a screen and returns to the previous screen
Select 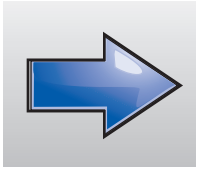	Selects a menu or menu item

Features

Feature	Description
Menu trail line: Menus > Settings > Copy Settings > Number of Copies	A Menu trail line is located at the top of each menu screen. This feature acts as a trail, showing the path taken to arrive at the current menu. It gives the exact location within the menus. Touch any of the underlined words to return to that menu or menu item. The Number of Copies is not underlined since this is the current screen. If you touch an underlined word on the Number of Copies screen before the Number of Copies is set and saved, then the selection is not saved, and it does not become the user default setting.
Attendance message alert 	If an attendance message occurs which closes a function, such as copy or fax, then a solid red dot appears over the function button on the home screen. This indicates that an attendance message exists.

Understanding the colors of the Sleep button and indicator lights

The colors of the Sleep button and indicator lights on the printer control panel signify a certain printer status or condition.

Indicator light	Printer status
Off	The printer is off or in Hibernate mode.
Blinking green	The printer is warming up, processing data, or printing.
Solid green	The printer is on, but idle.
Blinking red	The printer requires user intervention.

Sleep button light	Printer status
Off	The printer is off, idle or in Ready state.
Solid amber	The printer is in Sleep mode.
Blinking amber	The printer is entering or waking from Hibernate mode.
Blinking amber for 0.1 second, then goes completely off for 1.9 seconds in a slow, pulsing pattern	The printer is in Hibernate mode.

Accessing the service menus

There are different test menus that can be accessed during POR to identify the problems with the printer.

- **Diagnostics menu**—This group consists of menus, settings, and operations that are used to diagnose various printer problems.

  Note: While the Diagnostics menu group is active, all host interfaces are offline.
- **Configuration menu**—This group consists of menus, settings, and operations that are infrequently required by a user. Generally, the options made available in this menu group are used to configure a printer for operation.

Accessing the Diagnostics menu

1. Turn off the printer.
2. From the operator panel, press and hold the **3** and **6** buttons simultaneously for about 10 seconds.
3. Turn on the printer.
4. Release the buttons after 10 seconds.

Accessing the Configuration menu

1. Turn off the printer.
2. From the operator panel, press and hold the **2** and **6** buttons simultaneously for about 10 seconds.
3. Turn on the printer.
4. Release the buttons after 10 seconds.

Diagnostics menu

Entering the Diagnostics menu

1. Turn off the printer.
2. From the operator panel, press and hold the **3** and **6** buttons simultaneously.
3. Turn on the printer.
4. Release the buttons after 10 seconds.

Registration

Configure this setting to make sure printouts are aligned properly.

1. From the Diagnostics menu, select **REGISTRATION**.
2. Print a test page. For more information, see **"Printing a quick test page" on page 264**. Retain this page to determine the changes you need to make to the margin settings.

3 Configure any of the following margin settings.
   - **Top Margin** (value: -25 to +25)—A positive change moves the image down the page and increases the top margin. A negative change moves the image up and decreases the top margin.
   - **Bottom Margin** (value: -20 to +20)—A positive change compresses the image so it appears to move down the page and a negative change moves the image up.
   - **Left Margin** (value: -25 to +25)—A positive change moves the image to the left and a negative change moves the image to the right. No compression occurs.
   - **Right Margin** (value: -10 to +10)—A positive change moves the image to the right and a negative change moves the image to the left.

   Notes:
   - Use the left or right arrow button to decrease or increase the values.
   - You need to print a test page every time you configure a margin setting in order to verify the changes.
4 Touch **Submit** to save the changes.
5 Touch **Back** to exit REGISTRATION.

Printing a quick test page

Note: Use only A4- or letter-size paper.

The test page contains the following information:
- Device information
- Printer margin settings
- Scanner margin settings
- Alignment diamonds at the top, bottom, and each side
- Horizontal lines for skew adjustment
- General printer information, including current page count, installed memory, processor speed, serial number, engine ID, and system card ID

1 From the Diagnostics menu, select **REGISTRATION**.
2 Touch the right arrow button until **`Quick Test`** appears.
3 Press the Select button to start printing.

PRINT TESTS

This test determines if the printer can print on paper from any of the installed trays. Only the installed trays are listed in the Print Tests menu.

The content of the test page varies depending on the paper in the selected tray. Check each test page from each source to assist in print quality and paper feed problems.

Input Source Test

1. From the Diagnostics menu, select **PRINT TESTS**.
2. Select a media source to test:
   - Tray 1 (standard tray)
   - Tray 2
   - Tray 3
   - Tray 4
   - Tray 5
   - MP Feeder
   - Envelope Feeder

   Note: Trays 2–5 and the feeders are optional and are only available if installed.
3. Select one of the following:
   - **Single**—A single sheet is printed.
   - **Continuous**—Printing continues until the Stop button is pressed to cancel the test.

   Note: If the input source contains envelopes, then an envelope test pattern is printed. Even if Continuous is selected, the test pattern is only printed on the first envelope.
4. Touch **Back** to return to PRINT TESTS.

Note: Print Test Page always prints on one side of the paper even if duplex printing is enabled.

Print Quality Pages

This allows printing of the print quality pages with the toner cartridge lockout-function disabled. The Print Quality Test pages are printed in English and must always be printed on letter, legal, or A4 paper.

1. From the Diagnostics menu, select **PRINT TESTS**.
2. Touch the right arrow button beside **Printing Quality Test Pages** to start printing.

Note: The print quality test pages can also be printed from the Configuration menu (CONFIG MENU). However, a cartridge must be installed with a machine class ID mathcing the machine class ID stored in NVRAM. Additional diagnostic information may be printed on the pages when printing from Diagnostics.

The following is included in the DIAGNOSTICS version of the print quality pages:

- Values from EP SETUP (including fuser temperature, warm-up time, transfer, print contrast, charge roll settings, and gap adjust)
- Contents of the EVENT LOG
- Configuration information, including printer serial number, controller code level, engine code level, and cartridge information.
- Default values for the QUALITY MENU settings used to print the pages.

HARDWARE TESTS

Panel Test

This test automatically toggles each pixel of the display or home screen, depending on your printer model, through every contrast level beginning with the darkest to the brightest. This continues until you press the Stop button.

Button Test

This test verifies the operation of the buttons on the operator panel. When Button Test is selected, a diagram of the operator panel appears on the panel.

If you press a button on the operator panel while running the test, then the corresponding touch screen key is emphasized. Touch **Back** to cancel the test.

DRAM Test

This test checks the validity of the standard and optional dynamic random access memory (DRAM). The test repeatedly writes patterns of data to the DRAM to verify that each bit in the memory can be set and read correctly.

1. From the Diagnostics menu, navigate to **HARDWARE TESTS** > **DRAM Test**.

   Note: The printer performs the test and then resets.

2. After the printer resets, the results of the test appear: **`DRAM Test [x] P:###### F:######`**.

   Where:

   - **`[x]`** represents the size of the installed DRAM.
   - **`P:######`** represents the number of times the memory test passed and finished successfully. The maximum pass count is 999,999.
   - **`F:#####`** represents the number of times the memory test failed and finished with errors. The maximum pass count is 999,999.

   Note: After the maximum pass or fail count is reached or when all the DRAM has been tested, the test stops and the final results appear.

3. To stop the test before completion, turn off the printer.

CACHE Test

This test verifies the printer processor cache.

1. From the Diagnostics menu, navigate to **HARDWARE TESTS** > **CACHE Test**.

   Note: The printer performs the test and then resets.

2. After the printer resets, the results of the test appear: **`Cache Test <### P:###### F:######`**.

Where:

- **P:######** represents the number of times the cache has passed and finished successfully. The maximum pass count is 999,999.
- **F:#####** represents the number of times the cache has failed and finished with errors. The maximum pass count is 999,999.

Note: After the maximum pass or fail count is reached, the test stops and the final results appear.

3 To stop the test before completion, turn off the printer.

USB HS Test Mode

1 From the Diagnostics menu, navigate to **HARDWARE TESTS** > **USB HS Test Mode**.

2 Find and select the port to be tested, and then press the Select button.

3 Select a test, and then press the Select button.

Port	Test
Port 0	Test J
Port 1	Test K
Port 2	Test SEO NAK
Port 3	Test Packet
	Test Force Enable

Notes:

- To exit the test, turn off the printer.
- If the test fails, then replace the failing USB cable.

DUPLEX TESTS

Quick Test

This test determines whether the top margin at the back of a duplexed page is set correctly. This prints a duplexed version of the Quick test page that can be used to adjust the duplex top margin. Use either Letter or A4 paper.

1 From the Diagnostics menu, navigate to **DUPLEX TESTS** > **Quick Test**.

2 Select one of the following:

- **Single**—Prints a single quick test page.
- **Continuous**—Continuously prints the quick test pages until the Stop button is pressed.

The printer attempts to print the quick test page from the default paper source. If the default paper source supports only envelopes, then the page is printed from Tray 1.

3 Check the page for the correct offset between the placement of the first scan line on the front and back side of a duplexed sheet.

4 If duplex top margin needs adjustment, then adjust first the top margin setting in the Registration menu.

Note: A positive offset moves the text down the page and widens the top margin, while a negative offset moves the text up the page and narrows the top margin.

Top Margin

This setting controls the offset between the placement of the first scan line on the front and back side of a duplex sheet.

Note: If duplex top margin needs adjustment, then adjust first the top margin setting in the Registration menu.

1 Print a quick test page.
   a From the Diagnostics menu, navigate to **DUPLEX TESTS** > **Quick Test**.
   b Select **Single**.
   c Hold the page to light to see whether the top margins of the back and front side are aligned.

2 From the Diagnostics menu, navigate to **DUPLEX TESTS** > **Top Margin**.

3 Change the margin value.

Notes:

- Changing the value by 1 unit moves the margin by 1/100 inch.
- A positive value moves the text down the page and widens the top margin. A negative value moves the text up the page and narrows the top margin.

4 Depending on your printer model, touch **Submit** or press the Select button to apply the changes.

5 To verify the adjustment, print a quick test page.

Sensor Test

This test determines whether the duplex sensors and switches are working properly.

1 From the Diagnostics menu, navigate to **DUPLEX TESTS** > **Sensor Test**.

`Sensor Test Testing` appears on the display.

2 Manually actuate the duplex input and exit sensors. The input sensor is in the back part of the duplex unit, while the exit sensor is in the return paper path.

Note: **`CL`** or **`OP`** appears on the display to indicate whether the sensor or switch is closed (CL) or open (OP).

3 Press the Stop button to exit the test.

Motor Test

This test determines whether the power and velocity values of the duplex option paper feed drive system are acceptable. The duplex runs the DC motor at high and low speed, taking an average of the power (PWM) required for each speed and calculating the KE value.

1. From the Diagnostics menu, navigate to **DUPLEX TESTS** > **Motor Test**.

   The power indicator light blinks and **`Motor Test Testing`** appears on the display.

2. When the motor stops, see the message that appears on the display to check whether the motor passed or failed the test.
3. Press the Stop button to exit the test.

Duplex Feed 1

This test feeds a blank sheet of paper to the duplex paper stop position 1. This can be run using any of the supported paper sizes.

1. From the Diagnostics menu, navigate to **DUPLEX TESTS** > **Duplex Feed 1**.

   The power indicator blinks while the paper is feeding and **`Duplex Feed 1 Feeding...`** appears on the display.

   Note: Do not cancel this test.

2. When **`Duplex Feed 1 Clear Paper`** appears on the display, then remove the media from the duplex unit.
3. From the control panel, press the Stop button to clear the message.

Duplex Feed 2

This test feeds a blank sheet of paper to the duplex paper stop position 2. This can be run using any of the supported paper sizes.

1. From the Diagnostics menu, navigate to **DUPLEX TESTS** > **Duplex Feed 2**.

   The power indicator blinks while the paper is feeding and **`Duplex Feed 2 Feeding...`** appears on the display.

   Note: Do not cancel this test.

2. When **`Duplex Feed 2 Clear Paper`** appears on the display, then remove the media from the duplex unit.
3. From the control panel, press the Stop button to clear the message.

INPUT TRAY TESTS

Feed Tests (input tray)

This test feeds blank pages through the paper path. This runs using any supported paper or envelope sizes.

1. From the Diagnostics menu, navigate to **INPUT TRAY TESTS** > **Feed Tests**.
2. Select a paper source, and then select one of the following:
   - **Single**—This feeds a single page.
   - **Continuous**—This continuously feeds pages until the Stop button is pressed.

Sensor Test (input tray)

This determines whether the input tray sensors are working correctly.

1. From the Diagnostics menu, navigate to **INPUT TRAY TESTS** > **Sensor Test**.
2. Select a paper source.

   Note: Only installed paper sources are listed in the menu.
3. Select a sensor to test.

   Sensors available for each paper source

Paper source	Tray empty sensor	Paper low sensor	Pass through sensor
Tray 1	✓	✓	x
Tray 2	✓	✓	✓
Tray 3	✓	✓	✓
Tray 4	✓	✓	✓
Tray 5	✓	✓	✓
Multipurpose feeder	✓	x	x
Envelope feeder	✓	x	x

4. Manually actuate each sensor to make it toggle between **`Open`** and **`Closed`**. The tray empty sensor can be actuated by hand. Use a sheet of paper to cover the pass through sensor.

   Note: If the sensor does not toggle, then it is malfunctioning.
5. Press the Stop button to exit the test.

OUTPUT BIN TESTS

Feed Tests (output bins)

This test verifies whether the media can be fed to a specific output bin. No information is printed on the media. This test can use any media size or envelope supported by the printer.

Note: Make sure that Configure Bins is not set to Link.

1. From the Diagnostics menu, select **OUTPUT BIN TESTS** > **Feed Tests**.
2. Select an output bin to test.

   Note: Only the installed bins are listed in the menu.
3. Select one of the following:
   - **Single**—This feeds a single page.
   - **Continuous**—This continuously feeds pages until the Stop button is pressed.
4. Touch **Back** to return to OUTPUT BIN TESTS.

Sensor Test (standard bin)

This test verifies whether the standard bin sensor is working correctly.

1. From the Diagnostics menu, navigate to:

   OUTPUT BIN TESTS > **Sensor Test** > **Standard Bin**

   Note: The current state of the sensor appears on the control panel display.
2. Manually actuate the sensor to make it toggle between **`Open`** and **`Closed`** or between **`empty`** and **`full`**, depending on the printer model. If the sensor does not toggle, then the sensor is malfunctioning.
3. Press the Stop button to exit the test.

BASE SENSOR TEST

This test determines whether the following sensors inside the printer are working properly.

- Toner level sensor
- Narrow media sensor
- Input sensor
- Output (exit) sensor
- Front door sensor

CAUTION—SHOCK HAZARD: Do not use your hand to toggle these switches. Use a nonconducting item.

1. From the Diagnostics menu, select **BASE SENSOR TEST**.
2. Select a sensor.
3. Manually actuate the sensor to make it toggle between **`Open`** and **`Closed`**. If the sensor does not toggle, then it is malfunctioning.

   Note: Remove and then reinstall the toner cartridge to actuate the toner level sensor.
4. Press the Stop button to exit the test.

DEVICE TESTS

Quick Disk Test

This test performs a nondestructive read/write test on one block per track on the disk. If the block is good, then the saved data is written back to the disk.

1. From the Diagnostics menu, navigate to **DEVICE TESTS** > **Quick Disk Test**.

   After the testing is completed, a message indicating whether the test passed or failed appears on the display.
2. Press the Stop button to return to DEVICE TESTS.

Disk Test/Clean

Warning—Potential Damage: This test destroys all data and should not be attempted on a good disk.

1. From the Diagnostics menu, navigate to **DEVICE TESTS** > **Disk Test/Clean**.
2. Touch **Yes** to continue.

   Note: This test cannot be canceled, and this may run approximately 1½ hours depending on the disk size. A progress bar appears on the display.
3. After the test is completed, check the message on the display to determine whether the test passed or failed. If the test fails, then the disk is unusable.

PRINTER SETUP

Defaults

Warning—Potential Damage: Data may be lost.

This setting is used by the printer to determine whether U.S. or international factory default values should be used. The following are among the printer settings affected:

- Paper size
- Envelope size
- PCL symbol set
- Code pages
- Units of measure

1. From the Diagnostics menu, navigate to **PRINTER SETUP** > **Defaults**.
2. Select **US** or **Non-US**.
3. Depending on your printer model, touch **Submit** or press the Select button to apply the changes.

Printed Page Count

The value of this setting gauges the amount of usage on the printer. The value will equal the values of the Picked Sides meter. After all print tests have been completed, the value will reset to zero.

Note: The value of the setting cannot be changed manually.

To view the page count, from the Diagnostics menu, select **PRINTER SETUP** > **Printed Page Count**.

Permanent Page Count

Note: The Permanent Page Count value cannot be reset.

The value of this setting indicates the total amount of pages that have been printed. After all print tests have been completed, the value will reset to zero.

1. From the Diagnostics menu, select **PRINTER SETUP**.
2. Depending on your printer model, select **Perm Setup Page** or **Permanent Setup Page**.

Serial Number

Note: The value of the setting can only be viewed.

1. From the Diagnostics menu, navigate to **PRINTER SETUP** > **Serial Number**.
2. Depending on your printer model, touch **Back** or press the Back button to return to PRINTER SETUP.

Engine Setting [x]

Warning—Potential Damage: Do not change these settings unless requested to do so by your next level of support.

These settings are used by Engine code ECs to fix field problems. [**x**] represents any value from 1 to 16.

Model Name

The model name can only be viewed and cannot be changed.

Configuration ID

There are two configuration IDs that are used to communicate information about certain areas of the printer that cannot be determined using hardware sensors. The IDs are originally set at the factory when the printer is manufactured. However, you may need to reset Configuration ID 1 or Configuration ID 2 whenever you replace the system board. The IDs consist of eight hexadecimal characters, including 0 through 9 and A through F.

When the printer detects a Configuration ID that is not defined or invalid:

- The default standard model configuration ID is used instead.
- The configuration ID becomes the only function available in DIAGNOSTICS.
- **`Check Config ID`** appears on the display except when the menu is in DIAGNOSTICS.

1. From the Diagnostics menu, navigate to **PRINTER SETUP** > **Configuration ID**.

   Note: **`Submitting Selection`** and the value for Configuration ID 1 appear on the display

2. Enter configuration ID 1.
   - Use the left or right arrow button to select a digit or character. Wait until the digit or character is underlined.
   - Use the up or down arrow button to change a digit or character.

Notes:

- When the last digit or character is changed, press the select button to validate Configuration ID 1.
- If the process is successful, then **`Submitting Selection`** and the value for configuration ID 2 appear on the display.

3 Enter configuration ID 2.

4 Depending on your printer model, touch **Submit** or press the Select button to apply the changes.

Note: The process is successful if **`Submitting Selection`** or a check mark, depending on your printer model, appears on the display.

5 Restart the printer.

Edge to Edge

When enabled, this setting shifts all four margins (top, bottom, left, and right) to the physical edge of the page (printable area of a supported paper size).

Set the setting to Off to restore normal margins.

EP SETUP

EP Defaults

This setting restores each printer setting listed in EP SETUP to its factory default value. This is also used to help correct print quality problems.

1 From the Diagnostics menu, navigate to **EP SETUP** > **EP Defaults**.

2 Select one of the following:
- **Restore**—To restore the default values.
- **Do Not Restore**—To exit without changing the settings.

Fuser Temperature (Fuser Temp)

This setting adjusts the fuser temperature to solve problems with paper curl on low-grade paper and problems with letterheads on some types of media.

1 From the Diagnostics menu, navigate to **EP SETUP** > **Fuser Temp**.

2 Set the fuser temperature to Normal, Lower, or Lowest.

Note: Normal is the factory default setting.

Fuser Page Count

Note: The fuser page count can only be viewed.

From the Diagnostics menu, navigate to **EP SETUP** > **Fuser Page Count**.

Warm Up Time

This setting determines the amount of time the printer warms up before allowing the pages to print. The factory default setting is 0. This time period lets the backup roll heat up and helps reduce curl in some environments.

Transfer

This setting can be set to Low, Medium, or High. Medium is the factory default setting.

Print Contrast

This setting controls the developer voltage offset.

1. From the Diagnostics menu, navigate to **EP SETUP** > **Print Contrast**.
2. Set the setting to Low, Medium, or High.

   Note: Medium is the factory default setting.
3. Apply the changes.

Charge Roll

This setting controls the charge roll voltage.

1. From the Diagnostics menu, navigate to **EP SETUP** > **Charge Roll**.
2. Set the setting to Low, Medium, or High.

   Note: Medium is the factory default setting.
3. Apply the changes.

Gap Adjust

The setting adjusts the minimum gap between sheets. Increasing this value reduces curl of some printed media and eliminates some output bin stacking problems. This also results in slower overall performance, measured in pages per minute.

1. From the Diagnostics menu, navigate to **EP SETUP** > **Gap Adjust**.
2. Adjust the setting.

   Note: The range of values is 0 to 255. 0 is the factory default setting.
3. Apply the changes.

Auto Dark Adj

Enable this setting to optimize the amount of toner used when printing with a specific operating point.

Each time this setting executes, the printer performs the following:

- Calibrates its toner density sensor
- Measures the reflectivity of its bare drum
- Prints patches on the drum and measures the reflectivity of the drum through the patches

- Cleans the transfer roll
- Calculates reflectivity ratios and operating points to attain the darkness target of each operating point
- Modifies the EP mechanism as necessary to adjust toner darkness

The cartridge smart chip controls how often this process executes.

1. From the Diagnostics menu, navigate to **EP SETUP** > **Auto Dark Adj**.
2. Select **Enable** or **Disable**.
3. Apply the changes.

REPORTS

Menu Settings Page

This setting prints the menu settings page. From the Diagnostics menu, navigate to **REPORTS** > **Menu Settings Page**. The following settings are printed:

- Maintenance Counter Value
- USB Scan to Local
- Print Quality Pages
- Reports
- Size Sensing
- Panel Menu
- PPDS Emulation
- Factory Defaults
- Energy Conserve
- Min Copy Memory
- NumPad Job Assist
- Fax Storage Location
- ADF Edge Erase
- FB Edge Erase
- Scanner Manual Registration
- Disable Scanner
- Paper Prompts
- Envelope Prompts
- Disk Encryption
- Wipe Disk
- Font Sharpening
- Required Standby
- LES Applications
- Key Repeat Initial Delay
- Key Repeat Rate
- Wiper Message
- Clear Custom Status

Touch **Back** to return to the Configuration menu.

EVENT LOG

Display Log

This event log lists the 12 most recent errors that have occurred on the printer. The most recent error appears in position 1, and the oldest error appears in position 12. If an error occurs after the log is full, the oldest error is discarded. Identical errors in consecutive positions in the log are entered.

Note: All 2xx and 9xx error messages are stored in the event log.

1. From the Diagnostics menu, navigate to **EVENT LOG** > **Display Log**.

   Note: Only three error codes appear at a time.

2. Depending on your printer model, touch **Back** or press the Back button to return to EVENT LOG.

Print Log

Additional diagnostic information is available when this event log is printed. The specific events that appear in the report vary depending on the operational history of the printer. Logs may include the following:

- Detailed printer information, including code versions
- Time and date stamps
- Page counts for most errors
- Additional debug information in some cases

1. From the Diagnostics menu, navigate to **EVENT LOG** > **Print Log**.

   Note: You can fax this event log to Lexmark or to your next level of support for verification or diagnosis.

2. Depending on your printer model, touch **Back** or press the Back button to return to EVENT LOG.

Clear Log

This allows you to remove all the current information in the event log. This affects both the viewed and printed log information.

1. From the Diagnostics menu, navigate to **EVENT LOG** > **Clear Log**.
2. Select **Yes**.

   Note: **`Deleting EVENT LOG`** appears on the display.

SCANNER TESTS

Back Side Scan Uniformity

This procedure should be run after the ADF has been replaced. Before proceeding, make sure that the scanner glass and backing material are clean.

ASIC Test

A pattern appears and **`ASIC Test Passed`** displays. If **`xxxxxx`** displays, then the test was unsuccessful.

Press **Stop** to return to the SCANNER TESTS menu.

Feed Test

To run the scanner feed test:

1. Touch the right arrow button to select Feed Test from the SCANNER TESTS menu.
2. The panel displays the setting's current value. Use the arrows to select from Letter, Legal, or A4.
3. Touch **START** to begin.

   `Running Flatbed...` displays. Press **4** to exit the test.
4. Touch **Back** to return to the Diagnostics menu.

Sensor Test

The following tests are available:

- Sensor (ADF document set)
- Sensor (ADF closed interlock)
- Sensor (FB scanner HP)
- Sensor (ADF sheet through)
- Sensor (ADF top door interlock)
- Sensor (ADF media exit sensor)
- Sensor (ADF lower door interlock)
- Sensor (ADF 1st scan)
- Sensor (ADF 2nd scan)
- Sensor (FB length 1)
- Sensor (FB length 2)
- Sensor (FB length 3)
- Sensor (ADF long media)
- Sensor (ADF Width 1)
- Sensor (ADF Width 2)
- Sensor (ADF Width 3)
- Sensor (ADF Width 4)

Configuration menu

Maintenance page count

When selected, the printer displays the current value for the maintenance kit counter. This counter tracks printer usage. A print job containing a single page increments the counter by one, while a duplex print job increments the counter by two.

If the value has reached the rated life of the maintenance kit, then scheduled maintenance is required.

Note: Reset the counter after the replacement maintenance kit is installed.

1. From the Configuration menu, select **Maintenance Counter Value** or **Maint Cnt Value** depending on your printer model.

   Note: This value cannot be changed.

2. Depending on your printer model, touch **Back** or press the Back button to return to the Configuration menu.

Maintenance page counter reset

After installing the maintenance kit, reset the maintenance counter.

1. From the Configuration menu, select **Reset Maintenance Counter** or **Reset Cnt** depending on your printer model.
2. Depending on your printer model, touch **Yes** or press the Select button to reset the counter.

USB Scan to Local

To change the USB Scan To Local setting:

1. Touch the right arrow button to select **USB Scan To Local** from the Configuration menu.
2. The panel displays the setting's name in the header and *<setting's current value>* below the header row. Use the arrows to change the setting. The selections are On and Off. The default is Enable.
3. Touch **Submit** to save the change.

   Touch **Back** to exit without changing the value.

Print quality pages

This option is a limited version of a similar setting that appears in the Diagnostics menu. To print the pages from the Diagnostics menu, see **"PRINT TESTS" on page 264**.

From the Configuration menu, select **Print Quality Pages** or **Prt Quality Pgs** depending on your printer model.

The print quality test pages, which contain a mixture of graphics and text, include the following information:

- Device information
- Printer revision levels
- Cartridge information
- Printer margin settings
- Minimum stroke width

Note: These pages are printed in English and must always be on letter, legal, or A4 paper.

Reports

Menu Settings Page

From the Configurations menu, navigate to **Reports** > **Menu Settings Page**.

This generates reports on several Configuration menu settings, including the following:

- Reset Cnt
- Maintenance Counter Value
- Disable Scanner
- Disk Encryption
- Panel Menu
- PPDS Emulation
- Reports
- Size Sensing
- Factory Defaults
- Debug Information

Note: Some settings are applicable only to some printer models.

Event Log

This generates a report on the history of printer errors.

From the Configuration menu, navigate to **Reports** > **Event Log**.

SIZE SENSING

This setting determines whether the printer automatically senses the size of the paper loaded on the following paper sources:

- Tray 1 (integrated)
- 250-sheet drawer
- 550-sheet drawer
- 2000-sheet drawer

1. From the Configuration menu, select **SIZE SENSING**.
2. Select **Auto** or **Off**.

   Note: When printing, make sure that the size of your document matches the size of the paper loaded on any of the paper sources.
3. Depending on your printer model, touch **Submit** or press the Select button to apply the changes.

Panel Menus

This setting allows the system support person to enable or disable the control panel menus. When disabled, users are not allowed to access and configure the menus.

1. From the Configuration menu, select **Panel Menus**.
2. Select **Enable** or **Disable**.

   Note: Enable is the factory default setting.
3. Depending on your printer model, touch **Submit** or press the Select button to apply the changes.

PPDS Emulation

This setting allows the user to activate or deactivate the PPDS emulation data stream. When activated, the following changes also occur:

- The SmartSwitch settings for each port are turned off.
- The printer language is changed to PPDS emulation.

  Note: Users can still switch languages on the control panel and through the PJL data stream.

1. From the Configuration menu, select **PPDS Emulation**.
2. Select **Deactivate** or **Activate**.

   Note: Deactivate is the factory default setting.
3. Depending on your printer model, touch **Submit** or press the Select button to apply the changes.

Factory Defaults

Warning—Potential Damage: This operation cannot be undone.

Except the following, this setting enables users to restore the factory default settings.

- Display language
- NETWORK/PORTS menu settings

1. From the Configuration menu, select **Factory Defaults**.
2. Select one of the following:
   - **Restore Base**—To restore all non-critical base printer NVRAM settings.
   - **Restore Network** or **Restore STD Net**—To restore all network NVRAM settings.

     Note: This is available only to network printers or printers connected to print servers.
   - **Restore LES**—To restore the factory default settings of the Lexmark Embedded Solutions applications. This is applicable only to some printer models.

Energy Conserve

This setting controls what values appear on the Power Saver menu.

1. From the Configuration menu, select **Energy Conserve**.
2. Select one of the following:
   - **On**—The Power Saver feature cannot be turned off. On is the factory default setting.
   - **Off**—**`Disabled`** appears in the Power Saver menu, but Power Saver can be turned off.
3. Depending on your printer model, touch **Submit** or press the Select button to apply the changes.

Min Copy Memory

This setting determines how much DRAM is allowed to be stored in the priority queue for copy jobs.

Note: The values appear only if the amount of installed DRAM is at least twice the amount of the value.

1. Enter the Configuration menu, and then select **Min Copy Memory**.
2. Select a setting.
3. Apply the changes.

NumPad Job Assist

This setting determines if you can configure and initiate a job using the hard buttons of the control panel.

1. Enter the Configuration menu, and then select **NumPad Job Assist**.
2. Select a setting.
3. Apply the changes.

Format Fax Storage

This setting enables you to format the non-volatile storage for faxes.

1. Enter the Configuration menu, and then select **Format Fax Storage**.

   Note: If an advanced password has been established, then enter the password to change the setting. If no advanced password exists, then establish one by using the keyboard that appears on the screen.
2. Apply the changes.

Fax Storage Location

This setting allows you to store faxes on the hard disk or NAND.

Note: This setting appears only if a hard disk is installed. The printer automatically stores all buffered faxes on NAND when no hard disk is installed.

1. Enter the Configuration menu, and then select **Fax Storage Location**.
2. Select a setting.
3. Apply the changes.

ADF Edge Erase

This setting sets the size of the no-print area around an ADF scan job.

1. Enter the Configuration menu, and then select **ADF Edge Erase**.
2. Select a setting.
3. Apply the changes.

FB Edge Erase

This setting sets the size of the no-print area around a flatbed scan job.

1. Enter the Configuration menu, and then select **FB Edge Erase**.
2. Select a setting.
3. Apply the changes.

Scanner Manual Registration

Use this setting to register the flatbed and ADF on the scanner. Perform a registration adjustment whenever the ADF, flatbed, or controller board is replaced.

Note: This setting does not appear if the Disable Scanner setting is set to Auto Disabled.

Enter the Configuration menu, and then select **Scanner Manual Registration**.

Flatbed registration adjustment

1. Enter the Configuration Menu, and then navigate to:

   Scanner Manual Registration > **Print Quick Test**
2. Remove all the pages from the ADF, place the Quick Test page on the flatbed, and then select **Copy Quick Test**.

   Do this step to view the current flatbed registration values.
3. Select **Flatbed**.

   The current values of the left margin and top margin registration settings appear.
4. Adjust the left and top margins.
5. Apply the changes.
6. Repeat step 2 to view the updated values.
7. Repeat steps 3 through 5 to make further adjustments.

ADF registration adjustment

1. Enter the Configuration Menu, and then navigate to:

   Scanner Manual Registration > **Print Quick Test**
2. Place the Quick Tests page on the ADF and then select **Copy Quick Test**.

   Do this step to view the current ADF registration values.

3 Select from the following options:
   - **ADF Front**—Place the quick test page faceup, short edge first into the ADF.
   - **ADF Back**—Place the quick test page facedown, short edge first into the ADF.

   The current values of the horizontal adjust and top margin registration settings appear.
4 Adjust the value of the horizontal adjust and top margin settings.
5 Apply the changes.
6 Repeat step 2 to view the updated values.
7 Repeat steps 3 through 5 to make further adjustments.

Disable Scanner

Use this setting to disable the scanner if it is not working properly.

1 Enter the Configuration menu, and then select **Disable Scanner**.
2 Select a setting, and then apply the changes.
3 Reset the printer.

Paper Prompts

When the paper source (tray or feeder) is out of the indicated paper size, a prompt is sent to the user to load the paper in the paper source. This setting allows you to assign a paper source with the correct size of paper loaded.

1 From the Configuration menu, select **Paper Prompts**.
2 Select one of the following:
   - Auto

     Note: This is the factory default setting.
   - MP Feeder or Multi-Purpose Feeder (depending on your printer model)
   - Manual Paper
3 Depending on your printer model, touch **Submit** or press the Select button to apply the changes.

Envelope Prompts

This setting allows you to assign a specific tray or feeder with a correct size of envelope loaded.

1 From the Configuration menu, select **Env Prompts** or **Envelope Prompts** depending on your printer model.
2 Select one of the following:
   - Auto

     Note: This is the factory default setting.
   - MP Feeder

- Envelope Feeder

  Note: This is available only in models T650, T652, and T654.
- Manual Env or Manual Envelope (depending on your printer model)

3 Depending on your printer model, touch **Submit** or press the Select button to apply the changes.

Action for Prompts

This setting determines what action is required from the printer to resolve any paper- or envelope-related change prompts.

1 From the Configuration menu, select **Action for Prompts**.

2 Select one of the following:
- **Prompt User**—Printer always requires user intervention to resolve the change prompt. This is the factory default setting.
- **Continue**—Printer automatically assumes that the user selects Continue when a change prompt occurs.
- **Use Current**—Printer automatically assumes that the user selects Use Current when a change prompt occurs.

3 Depending on your printer model, touch **Submit** or press the Select button to apply the changes.

Jobs on Disk

This setting appears only if a hard disk is installed. This does not affect held or parked jobs.

1 From the Configuration menu, select **Jobs on Disk**.

2 Select one of the following:
- **Delete**—To delete the buffered jobs saved on the disk.
- **Do Not Delete**—To cancel and return to the Configuration menu. This is the factory default setting.

Disk Encryption

This setting appears only if a hard disk is installed. It controls whether the printer encrypts the information that it writes to the hard disk.

1 From the Configuration menu, select **Disk Encryption**.

2 Select one of the following:
- **Enable**—To enable encryption of the hard disk.
- **Disable**—To enable formatting of the hard disk.

3 Select **Yes** to proceed with the encryption or formatting of the disk.

A progress bar appears on the display that indicates the overall completion of the selected operation.

Wipe Disk

This setting allows you to erase the contents of the hard disk.

1 From the Configuration menu, select **Wipe Disk**.

2 Touch **Wipe disk now**, and then touch **Yes** to continue.

Note: Erased data is unrecoverable.

Font Sharpening

Note: This is not supported when the device generates an output at 600 dpi resolution.

This setting allows you to set a text point-size value below which the high-frequency screens are used when printing font data.

1 From the Configuration menu, select **Font Sharpening**.

2 Increase or decrease the value.

Notes:

- The values for this setting range from 0 to 150. 24 is the factory default setting.
- This setting affects PostScript, PCL, and XL.

3 Depending on your printer mode, touch **Submit** or press the Select button to apply the changes.

Require Standby

This setting allows you to enable the Standby Mode.

1 Enter the Configuration menu, and then select **Require Standby**.

2 Select a setting.

3 Apply the changes.

LES Applications

Note: This setting is for touch-screen models only.

This setting allows you to enable or disable Lexmark Embedded Solutions (LES) applications. This setting does not affect built-in applications.

1 From the Configuration menu, select **LES Applications**.

2 Select **Enable** or **Disable**.

Note: Enable is the factory default setting.

3 Depending on your printer model, touch **Submit** or press the Select button to apply the changes.

Key Repeat Initial Delay

This setting determines the length of delay before a repeating key starts repeating. The range is 0.25–5 seconds, with increments of 0.25. One second is the factory default setting.

1. From the Configuration menu, navigate to **Key Repeat Initial Delay**.
2. Adjust the setting.
3. Touch **Submit** to apply the changes.

Key Repeat Rate

This setting indicates the number of presses per second for repeating keys. The range is 1–100. 15 presses per second is the factory default setting.

1. From the Configuration menu, navigate to **Key Repeat Rate**.
2. Adjust the setting.
3. Touch **Submit** to apply the changes.

Wiper Messages

1. From the Configuration menu, select **Wiper Messages**.
2. Select **On** or **Off**.

   Note: On is the factory default setting.
3. Depending on your printer model, touch **Submit** or press the Select button to apply the changes.

Clear Custom Status

Executing this operation erases any strings that have been defined by the user for the default or alternate custom messages.

1. From the Configuration menu, select **Clear Custom Status**.
2. Press the Select button to start the operation.

Repair information

Removal precautions

CAUTION—SHOCK HAZARD: For personal safety and to prevent damage to the printer, remove the power cord from the electrical outlet before you connect or disconnect any cable, electronic board, or assembly. Disconnect any connections between the printer and the PCs/peripherals.

Handling ESD-sensitive parts

Many electronic products use parts that are known to be sensitive to electrostatic discharge (ESD). To prevent damage to ESD-sensitive parts, do the following:

- Turn off the printer before removing logic boards.
- Keep the parts in their original packing material until you are ready to install them into the printer.
- Make the least-possible movements with your body to prevent an increase of static electricity from clothing fibers, carpets, and furniture.
- Put the ESD wrist strap on your wrist. Connect the wrist band to the system ground point. This action discharges any static electricity in your body to the printer.
- Hold the parts by their edge connector shroud. Do not touch its pins. If you are removing a pluggable module, then use the correct tool.
- If possible, keep all parts in a grounded metal cabinet.
- Do not place the parts on the printer cover or on a metal table. If you need to put down the parts, then put them into their packing material.
- Prevent parts from being accidentally touched by other personnel. Cover the printer when you are not working on it.
- Be careful while working with the parts when cold-weather heating is used. Low humidity increases static electricity.

Adjustments

Adjusting skew

For flatbed scanner and ADF skew adjustment, refer to the examples below to identify if “negative” or “positive” skew is present; this will help with determining the correct adjustment to be made.

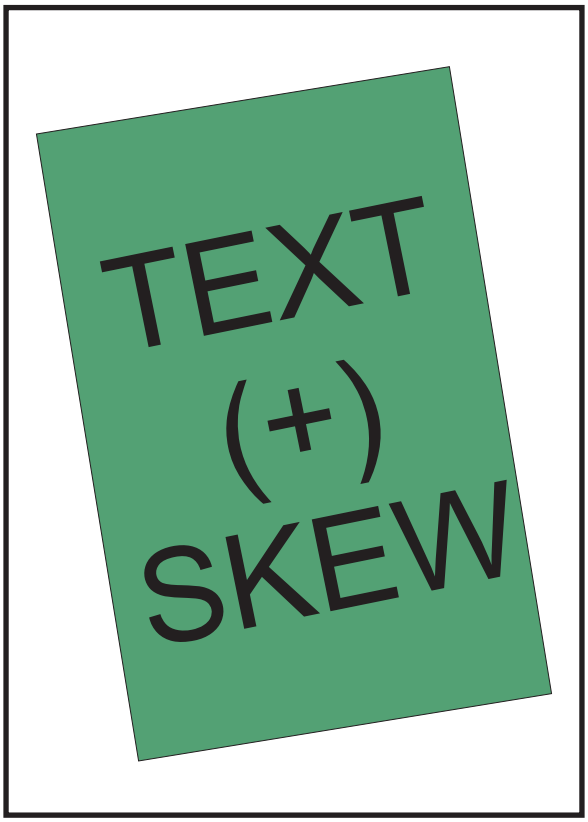

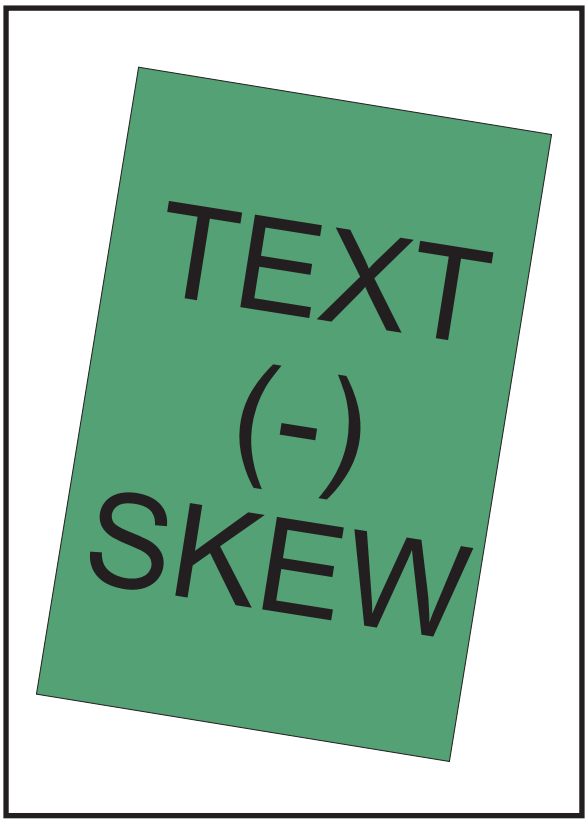

Acceptable ADF and flatbed scanner specifications

Scan

Flatbed (LE, TE, left and right edges) = +/- 0.5% (or +/- 0.005 mm/mm)

ADF simplex and duplex (LE, TE, left and right edges) = +/- 0.75%

Copy

Flatbed, ADF simplex and duplex (LE, TE, left and right edges) = +/- 0.75%

Flatbed scanner skew adjustment

1 Remove the scanner left cover. Go to **"Scanner left cover removal (models X651, X652, X654, and X656)" on page 522** or **"Scanner left cover removal (model X658)" on page 523**.

2 To adjust the flatbed scanner skew, loosen the screws (A), and then slide the scanner rod mounting plate left or right accordingly, and then retighten the screws (A).

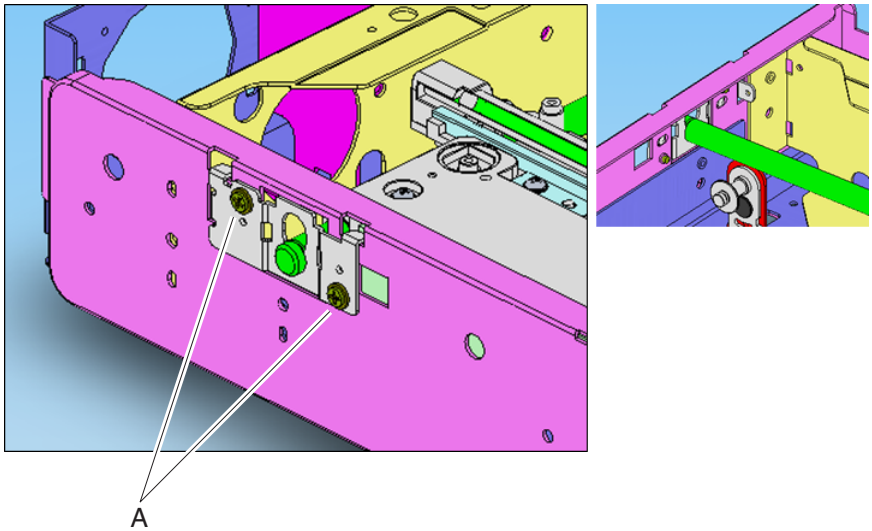

ADF skew adjustment (via ADF document tray)

1 Remove the ADF front and rear covers. Go to **"ADF front cover removal" on page 537** or **"ADF rear cover removal" on page 538**.

2 Loosen the screws securing the ADF document tray on either side.

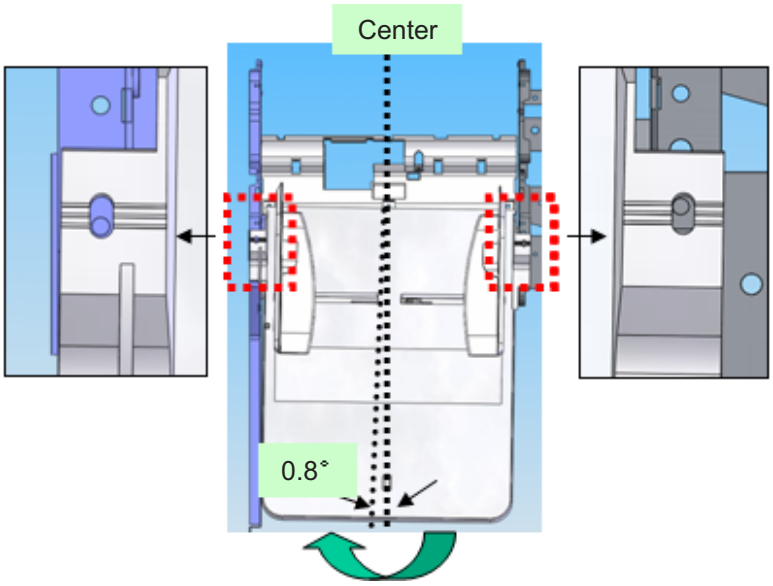

3 For the positive skew, rotate the document tray clockwise as shown above.

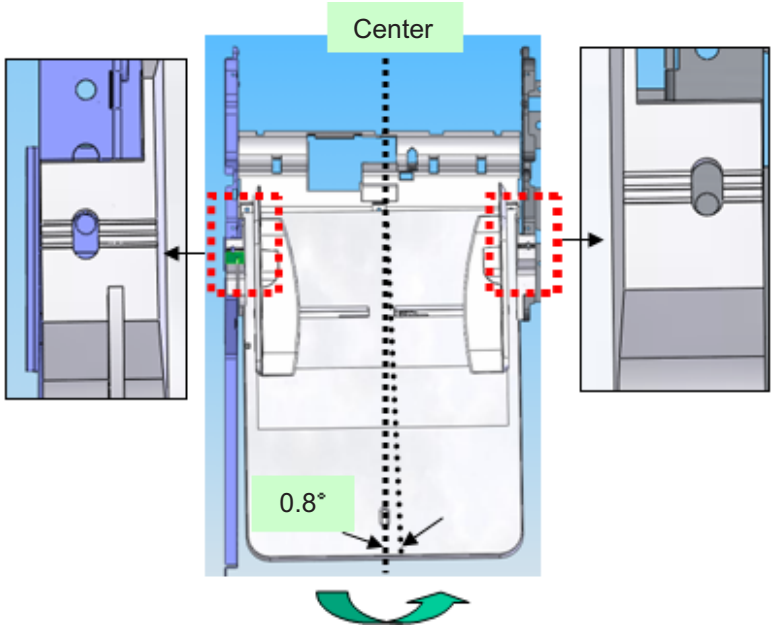

4 For negative skew, rotate the document tray counterclockwise as shown above.

5 After skew correction has been made, tighten the document tray screws, and then reinstall the ADF front and rear covers.

ADF skew adjustment (via duplex LED assembly)

1 Remove the ADF front cover. Go to **"ADF front cover removal" on page 537**.

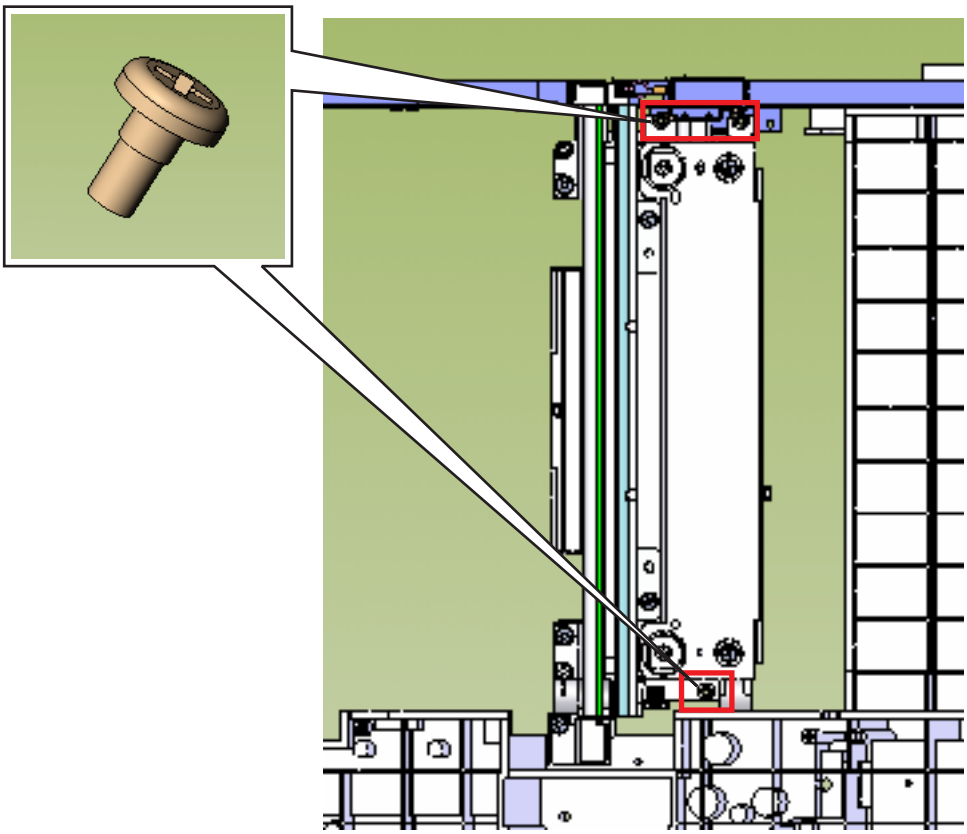

2 Loosen the M4 screw (A) on the right below.

3 Turn the skew adjustment screw (B) (to the left, below) appropriately - clockwise for negative skew and counterclockwise for positive skew.

Note: Each full turn of the adjustment screw yields 0.5 mm of skew correction. The maximum adjustment is three turns for clockwise movement of the screw and four turns for counterclockwise movement.

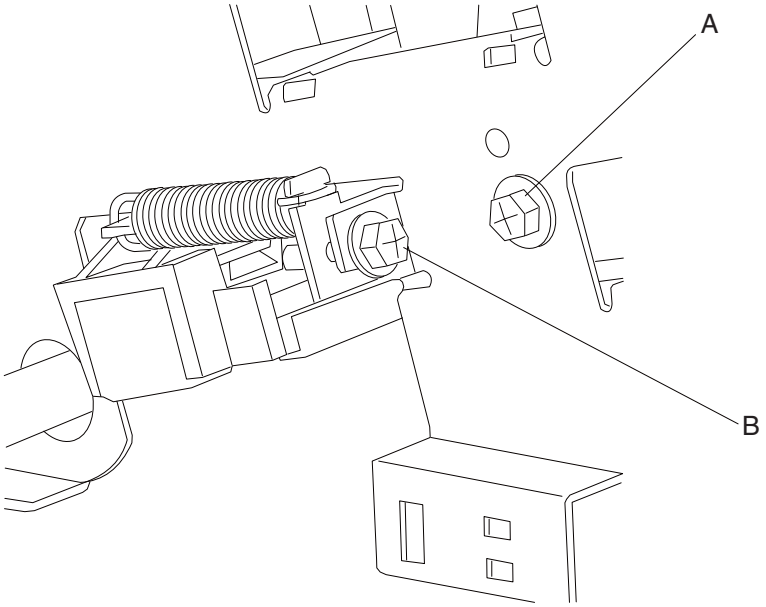

4 After skew correction has been made, tighten the M4 screw. Assembly is reverse of the removal procedures.

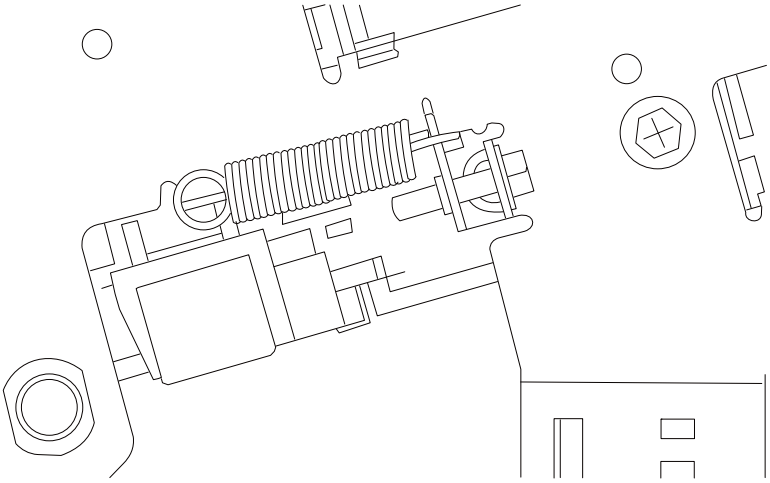

Note: If the bracket above is aligned with the alignment hole in the ADF frame, the duplex LED assembly is parallel with its roller.

Media squareness check

This test is critical when cut paper is being used to align the ADF skew during reworks. Pallets of quality paper may be found with more than 2 mm of skew.

1 Remove the consecutive pieces of paper from the ream.

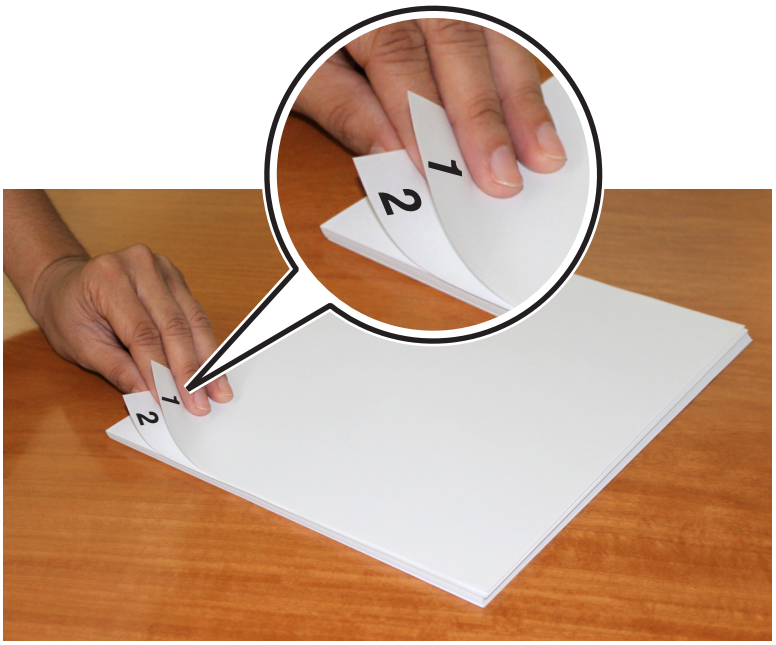

2 Flip one of the pages over in the direction shown below.

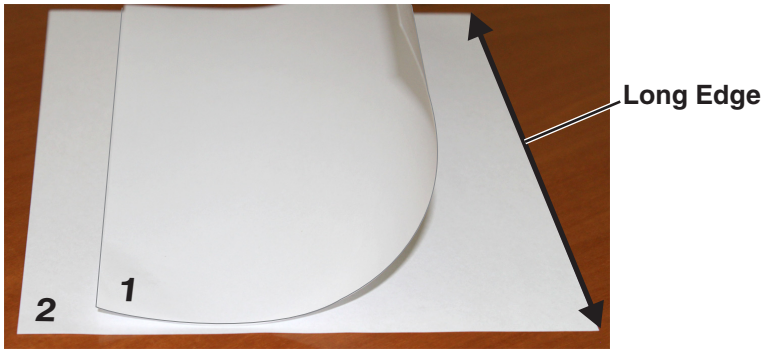

3 This shows the final position of the two pages.

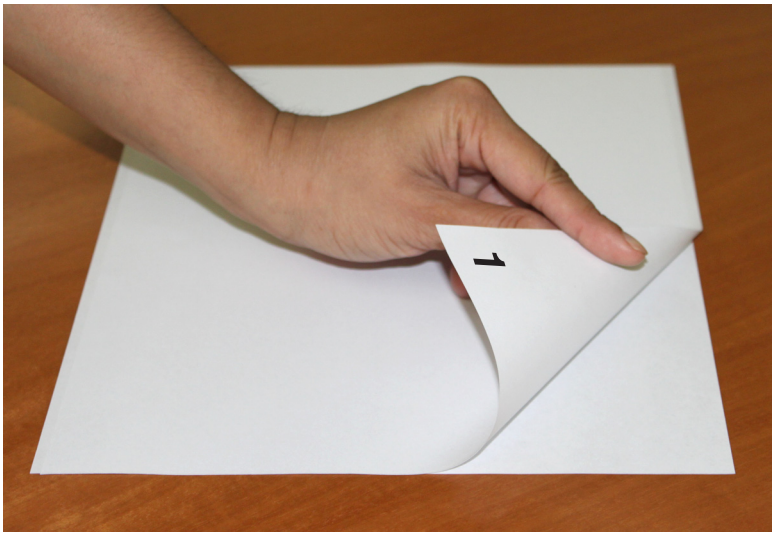

4 Ttap the two pages on a flat surface until the bottom edge is aligned.

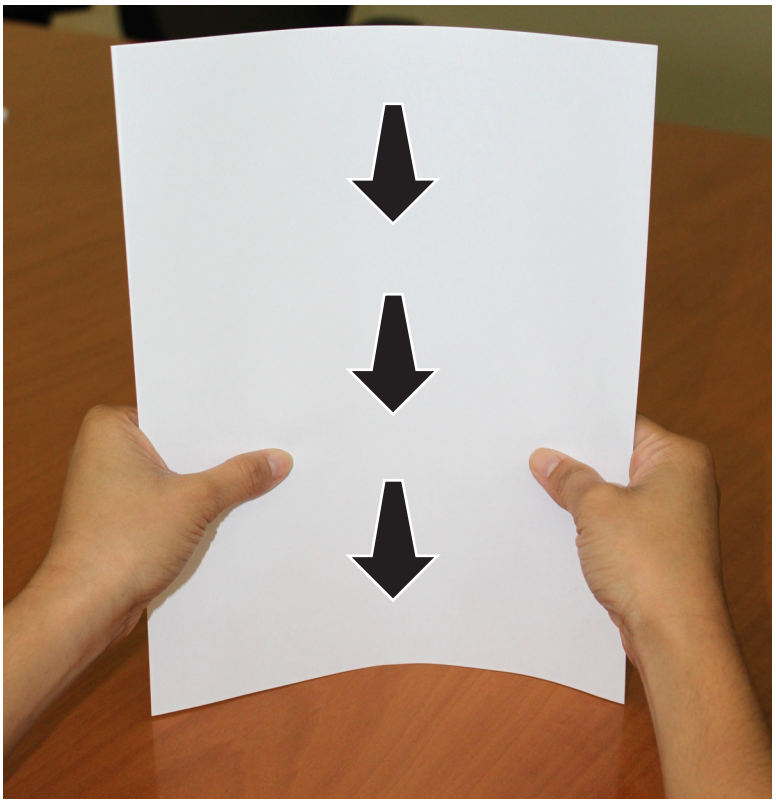

5 Look closely at the top edge of the media to see if the sheets are aligned.

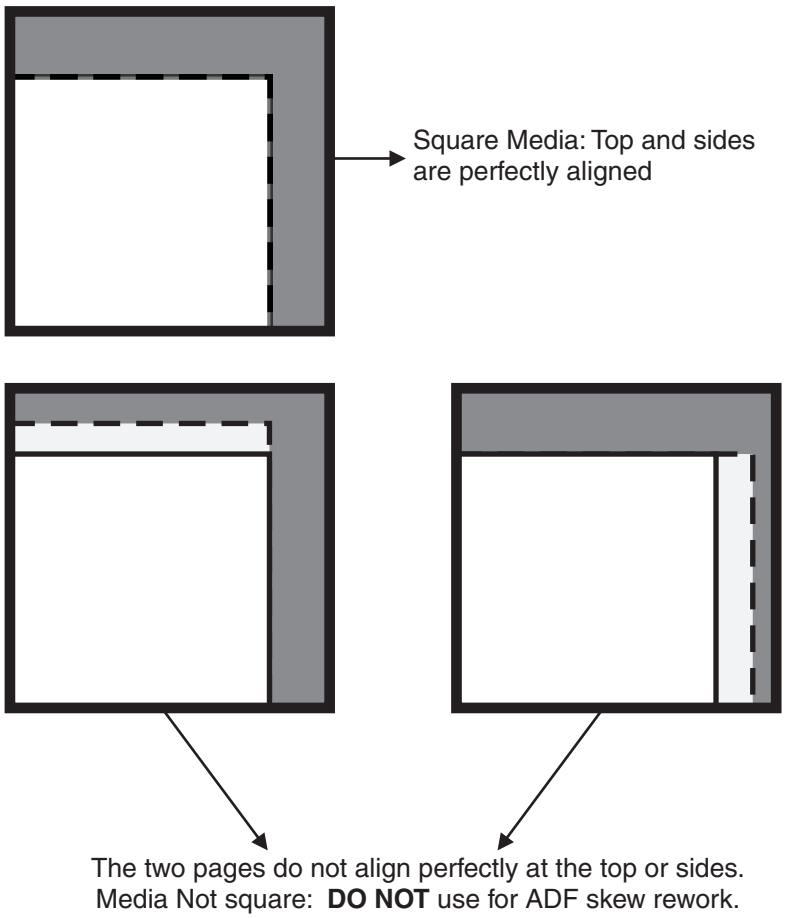

Print skew correction procedure

1 Check the paper squareness.

2 Make sure that the guides in the paper tray are properly aligned.

3 Check the base printer skew and registration.

4 Plug the printer into the power source, and then power on in Diagnostics Mode (hold down 3 and 6 during POR).

5 Measure L1, L2, T1, T2, R1, R2, B1, and B2 data points as shown below.

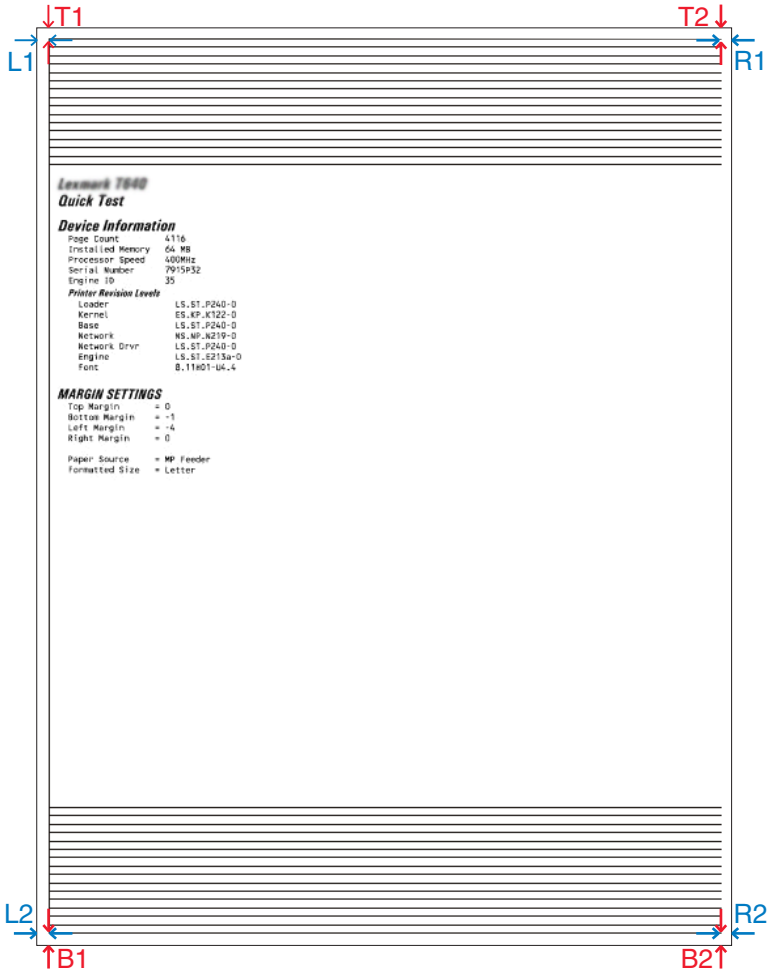

6 Determine the following calculations:

- L2-L1 = _____
- R2-R1 = _____
- T2-T1 = _____
- B2-B1 = _____

7 Determine if the printer passes or fails the skew specifications based on the values listed on the table.

Specifications				
--	(L2-L1)	(R2-R1)	(T2-T1)	(B2-B1)
Letter	equal or less than 1.4 mm	equal or less than 1.4 mm	equal or less than 1 mm	equal or less than 1 mm
A4	equal or less than 1.5 mm	equal or less than 1.5 mm	equal or less than 1 mm	equal or less than 1 mm
Legal	equal or less than 1.8 mm	equal or less than 1.8 mm	equal or less than 1 mm	equal or less than 1 mm

8 If the printer does not meet the skew specifications, then adjust the reference edge.

9 Check the registration by looking at the dots and the edges of the page. Adjust as neede.

Copy skew correction procedure

Note: This specification is used for copies from the flatbed, front ADF, and back ADF.

1. Check the paper squareness.
2. Make sure that the guides in the paper tray are properly aligned.
3. Check the base printer skew and registration.
4. Make sure that the page is pushed to the top left corner of the flatbed.
5. Make sure that the auto document guides are snug against the page.
6. Plug the printer into the power source, and then power on in Normal Printing Mode.
7. Measure CopyL1, CopyL2, CopyT1, CopyT2, CopyR1, CopyR2, CopyB1, and CopyB2 data points as shown below.

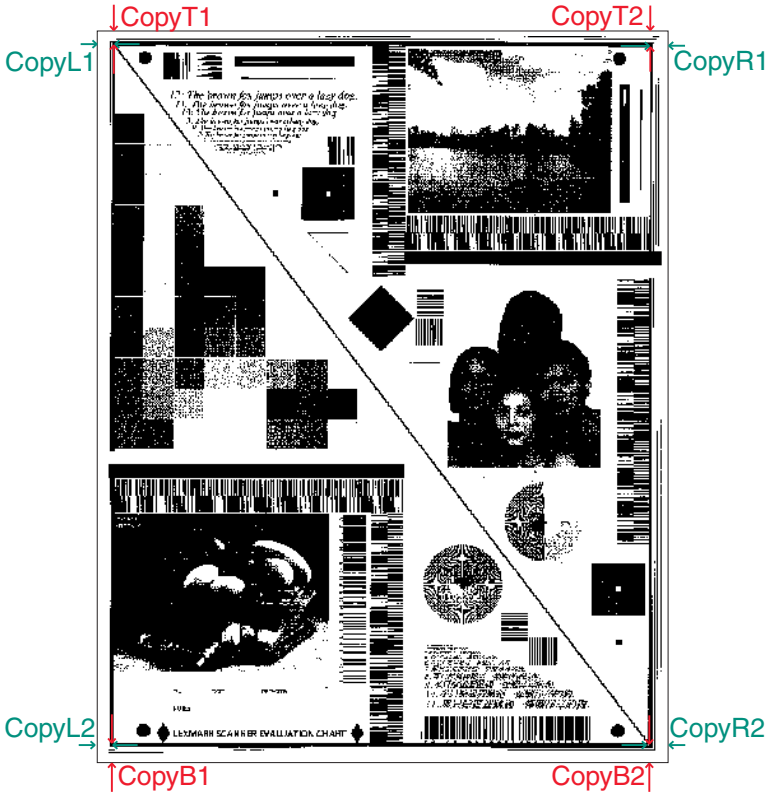

8. Measure from the edge of the paper to the outer edge of the thick black line.
9. Determine the following calculations:
   - CopyL2-CopyL1 = _____
   - CopyR2-CopyR1 = _____
   - CopyT2-CopyT1 = _____
   - CopyB2-CopyB1 = _____
   - CopyT1-CopyB1 = _____
   - CopyL1-CopyR1 = _____
10. Determine if the printer passes or fails the skew specifications based on the values listed on the table.

Copy Skew Specification		
Measurement	**Specification**	**Description**
(CopyL2-CopyL1)	equal or less than 2.0 mm	Left Skew
(CopyR2-CopyR1)	equal or less than 2.0 mm	Right Skew
(CopyT2-CopyT1)	equal or less than 1.5 mm	Top Skew
(CopyB2-CopyB1)	equal or less than 1.5 mm	Bottom Skew

Copy Registration Specification		
Measurement	**Specification**	**Description**
(CopyT1-CopyB1)	equal or less than 3.0 mm	Vertical Registration
(CopyL1-CopyR1)	equal or less than 4.0 mm	Horizontal Registration

11 Adjust the skew as specified in **"Adjusting skew" on page 291** as needed.

12 Adjust the scanner registration manually as needed in the Configuration menu.

Printer skew specifications

Abnormal skew printer correction

1 The repair operator should evaluate the left edge of the paper to determine if the aligner is properly set. If the left vertical line is with the defined limit, parallel to the edge of the paper, the aligner is correct and properly set. If the left edge vertical line is not within the defined limit or spec, then the repair operator can adjust the aligner at the repair station.

2 The repair operator should evaluate the horizontal line at the top edge of the page for potential LSU induced skew. If the horizontal line does not fall within the defined limit or spec, then it is considered skewed and the printhead must be adjusted. Go to **"Polygon printhead mechanical registration adjustment" on page 304**.

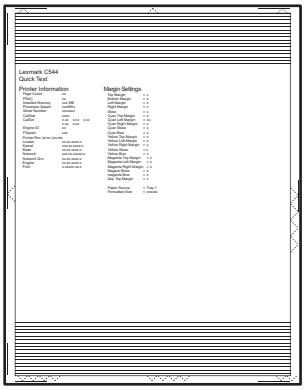

Straight

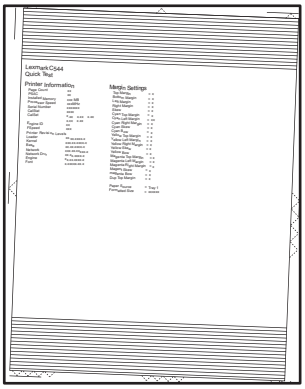

Skewed

Printhead Skew + Paper Feed Skew

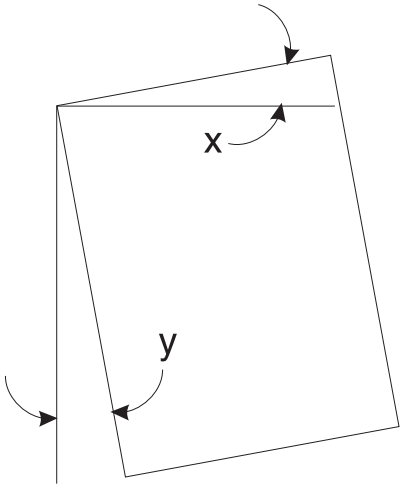

"x" = +/- 0.005mm/mm max.
"y" = +/- 0.005mm/mm max.

Duplex Skew Specification

Side	1	2
Print Sequence Thru Printer	2nd	1st
16 lb. to 24 lb.	+/-0.007 mm/mm	+/-0.005 mm/mm
All Other Papers	+/-0.010 mm/mm	+/-0.005 mm/mm
Card Stock	+/-0.007 mm/mm	+/-0.007 mm/mm
Labels • Paper, Dual-Web Paper • Vinyl, Polyester (less than or equal 92# liner)	+/-0.010 mm/mm +/-0.010 mm/mm	+/-0.010 mm/mm +/-0.010 mm/mm

Print Registration

Initial adjustment (adjustable in increments of T=0.3mm, B=0.5mm, R and L=0.2mm)

- Left print position accuracy (scanning direction): +/-0.5mm - start on scan
- Top print position accuracy (feeding direction): +/-0.5 mm - start on scan
- Horizontal page width accuracy: +/-0.5mm - mirror motor
- Vertical page length accuracy: +/-0.5mm - drive motor

Print Position Error

Measured at any point in the printable area using core media papers.

- Vertical (process): +/-0.7mm
- Horizontal (magnification): +/-0.7mm

Handling ESD-sensitive parts

Many electronic products use parts that are known to be sensitive to electrostatic discharge (ESD). To prevent damage to ESD-sensitive parts, use the following instructions in addition to all the usual precautions, such as turning off power before removing logic boards:

- Keep the ESD-sensitive part in its original shipping container (a special “ESD bag”) until you are ready to install the part into the machine.
- Make the least-possible movements with your body to prevent an increase of static electricity from clothing 8fibers, carpets, and furniture.
- Put the ESD wrist strap on your wrist. Connect the wrist band to the system ground point. This discharges any static electricity in your body to the machine.
- Hold the ESD-sensitive part by its edge connector shroud (cover); do not touch its pins. If you are removing a pluggable module, use the correct tool.
- Do not place the ESD-sensitive part on the machine cover or on a metal table; if you need to put down the ESD-sensitive part for any reason, first put it into its special bag.
- Machine covers and metal tables are electrical grounds. They increase the risk of damage, because they make a discharge path from your body through the ESD-sensitive part. (Large metal objects can be discharge paths without being grounded.)
- Prevent ESD-sensitive parts from being accidentally touched by other personnel. Install machine covers when you are not working on the machine, and do not put unprotected ESD-sensitive parts on a table.
- If possible, keep all ESD-sensitive parts in a grounded metal cabinet (case).
- Be extra careful in working with ESD-sensitive parts when cold-weather heating is used, because low humidity increases static electricity.

Model information used in the parts catalog

When replacing parts, always check the serial number label on the rear of the machine for the machine type/model number. Match the machine type/model number with the machine type model that is referenced in the parts catalog for the part being replaced. There is also a label inside the front door of the machine.

Polygon printhead mechanical registration adjustment

Do the printhead mechanically registration adjustment whenever you remove or replace the printhead or loosen the mounting screws.

Install the new printhead with the mounting screws centered in the slots in the printhead frame assembly. Leave the screws loose enough to allow the printhead to move from side to side within the slots. It is necessary to perform a mechanical registration adjustment before locking down the three printhead mounting screws.

Note: In the case of paper feed skew, go to **“Alignment assembly adjustment” on page 305**.

1. Turn the printer off.
2. Press and hold 3 and 6 to enter the diagnostic mode.
3. Turn the printer on, and release the buttons when **`Performing Self Test`** displays.
4. Select **Registration** from the menu.

5 Select **Quick Test Page**. The test page should only be printed on letter or A4 paper from Tray 1. The Quick Test Page consists of alignment diamonds, horizontal lines that can be used for mechanical registration adjustment. An example of the printhead alignment printout is shown below:

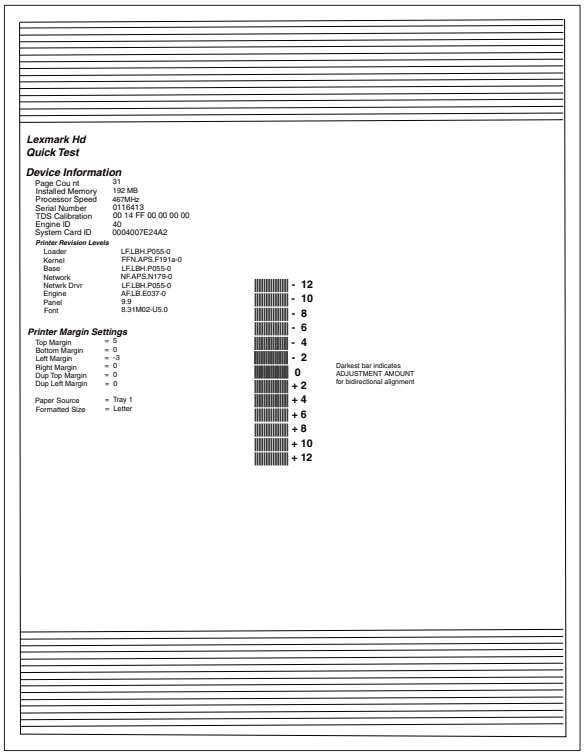

Check the Quick Test Page for any sign of misalignment by checking the diamonds at the top left and top right of the test page for equal distance from the top of the page. If necessary, rotate the printhead to the left or right and tighten down the mounting screws and check for proper alignment again by running another Quick Test Page. This procedure may take two or three attempts before you get satisfactory results.

6 When you have the correct adjustment, ensure that the printhead mounting screws are properly tightened.

Alignment assembly adjustment

Do the alignment assembly adjustment whenever you replace the alignment assembly. Always print a copy of the Quick Test Page before making any adjustments to the alignment assembly reference adjustment screw. When replacing the alignment assembly, it is necessary to back the reference adjustment screw out far enough to remove the old assembly and install the new one.

- If you are replacing the alignment assembly, go to step A.
- If you are only adjusting the reference adjustment screw, go to step B.

Step A

Print a copy of the Quick Test Page and check the margin adjustments printed on the test page. These settings should be within the range specified in **"Registration" on page 263**.

Do the reference adjustment if you are sure the margins are set correctly.

1 Loosen the locknut on the inside rear of the alignment assembly.

2 Remove the two screws holding the alignment assembly to the left side frame.

3 Back the reference adjustment screw out far enough to allow the alignment assembly to be removed from the printer. It is not necessary to completely remove the screw.

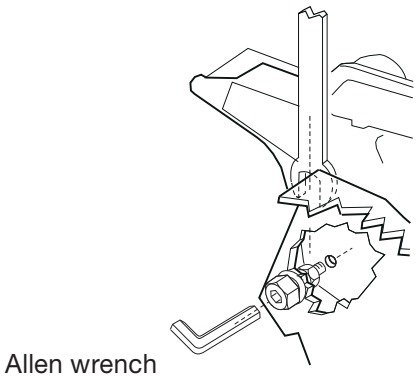

4 Install the new alignment assembly. Turn the reference screw clockwise with a 7 mm M3 Allen wrench until it touches the back of the reference plate, and tighten the nut with a 5.5 mm wrench.

The reference adjustment screw can be adjusted without loosening the nut. Turn the screw clockwise a few turns and print a copy of the Quick Test Page as you check the diamonds on the left margin. Continue adjusting the screw as you check the results of each adjustment on a new test page until you obtain the results you want.

Step B

Print a copy of the Quick Test Page and check the margin adjustments printed on the test page. These settings should be within the range specified in **"Registration" on page 263**. The reference screw can be adjusted without loosening the locknut. Turn the screw a few turns, and print a copy of the Quick Test Page as you check the diamonds on the left margin. Continue adjusting the screw as you check the results of each adjustment on a new test page until you obtain the results you want.

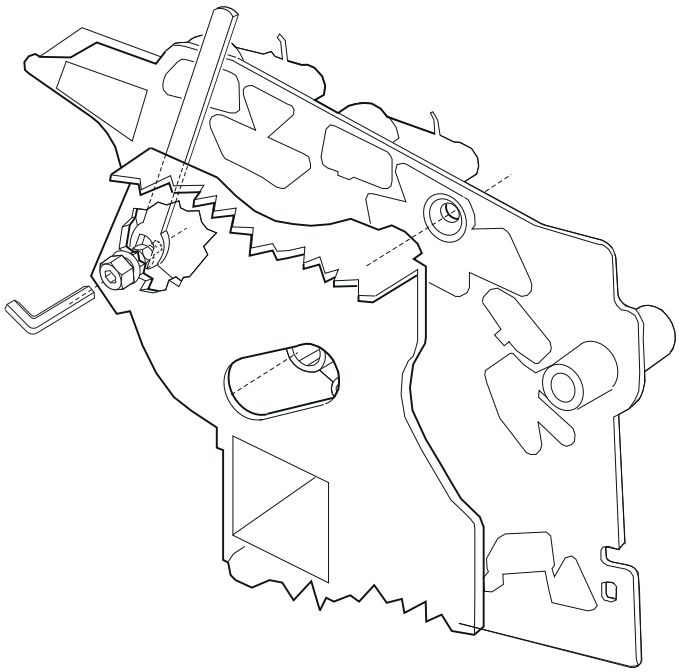

Fuser solenoid adjustment

Perform the fuser solenoid adjustment whenever you replace the fuser solenoid. Adjust the fuser solenoid while installed in the printer. Adjust the screw on the eccentric mounted on the solenoid housing to provide an air gap between the rear of the solenoid stator and the solenoid armature. The solenoid air gap for all models is 4.5 mm ± 0.1 mm.

Gap adjustment

The gap adjustment allows you to increase the minimum gap between sheets of paper as they are fed through the printer. This adjustment reduces the printer overall performance, such as pages per minute, but can help in reducing the amount of curl of some printed media, thus improving media stacking in the output bin.

1. Enter the Diagnostic Mode.
2. Select **Ep Setup** from the Diagnostic Menu.
3. Select **Gap Adjust**.
4. The range of the GAP adjustment is 0 to 255. Adjust the gap setting by using the Menu button to select the value. If GAP=0 displays, it indicates a factory setting to minimum gap. Select a value and run several copies of the media that displays a curl problem. It may take several tries before improvement is noticed.

   Note: This setting has no effect when duplexing.

Removal procedures

Keep the following tips in mind as you replace parts:

- Some removal procedures require removing cable ties. You must replace cable ties during reassembly to avoid pinching wires, obstructing the paper path, or restricting mechanical movement.
- Remove the toner cartridges, imaging unit, and media tray before removing other printer parts. The imaging unit should be carefully set on a clean, smooth, and flat surface. It should also be protected from light while out of the device.
- Disconnect all external cables from the printer to prevent possible damage during service.
- Unless otherwise stated, reinstall the parts in reverse order of removal.
- When reinstalling a part held with several screws, start all screws before the final tightening.

Left side removals

Access door removal

1 Open the access door.

2 Gently detach the two hinges (A) of the access door from the machine.

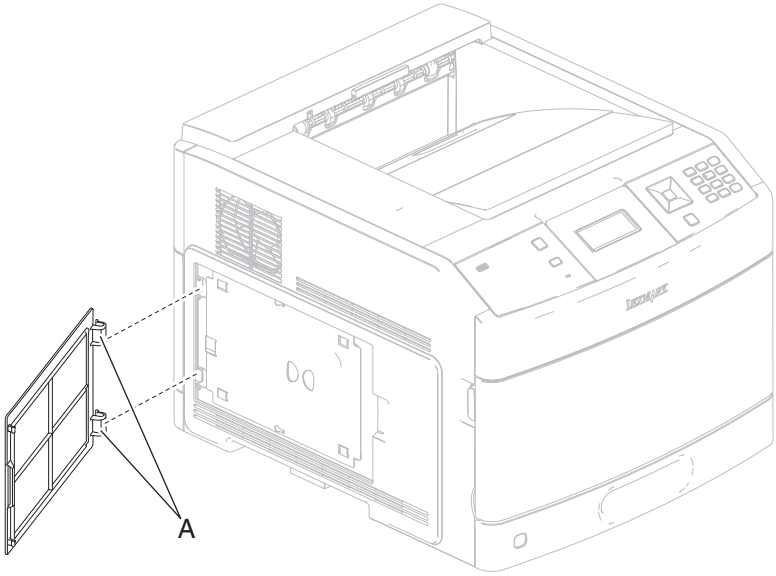

3 Remove the access door.

Alignment assembly removal

Warning—Potential Damage: When replacing the alignment assembly, ensure that the media skew is properly adjusted using the adjuster screw (C), or jamming will occur. Go to **"Alignment assembly adjustment" on page 305**.

1 Remove the left side cover. Go to **"Left side cover removal (models X651, X652, X654, and X656)" on page 317** or **"Left side cover removal (model X658)" on page 318**.

2 Remove the six screws (A) securing the metal cover to the machine.

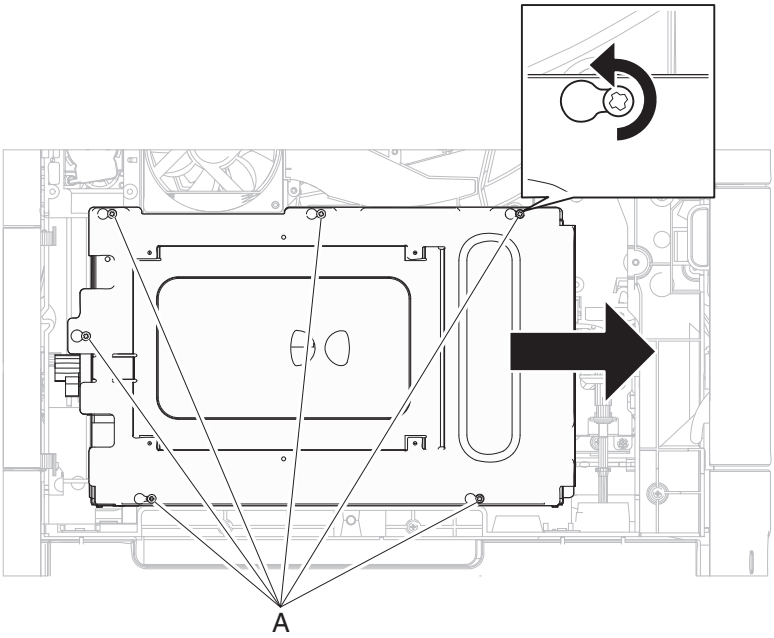

3 Remove the metal cover.

4 Remove the inner deflector. Go to **“Inner deflector removal” on page 337**.

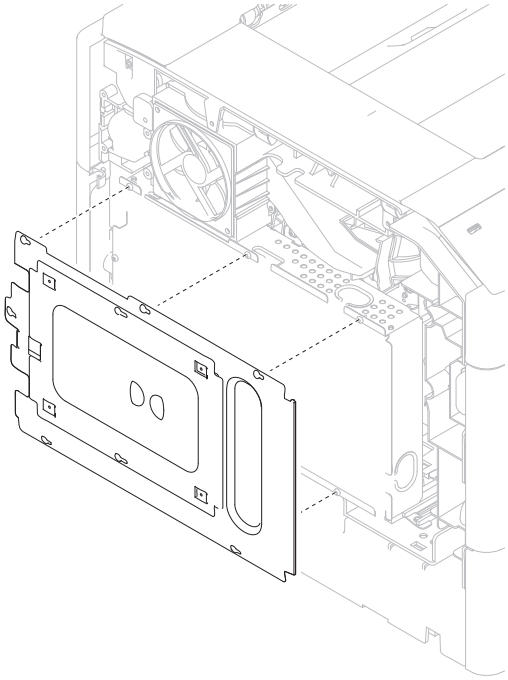

5 Remove the MPF pick solenoid assembly. Go to **“MPF pick solenoid assembly removal” on page 313**.

6 Remove the two screws (B) securing the alignment assembly to the machine.

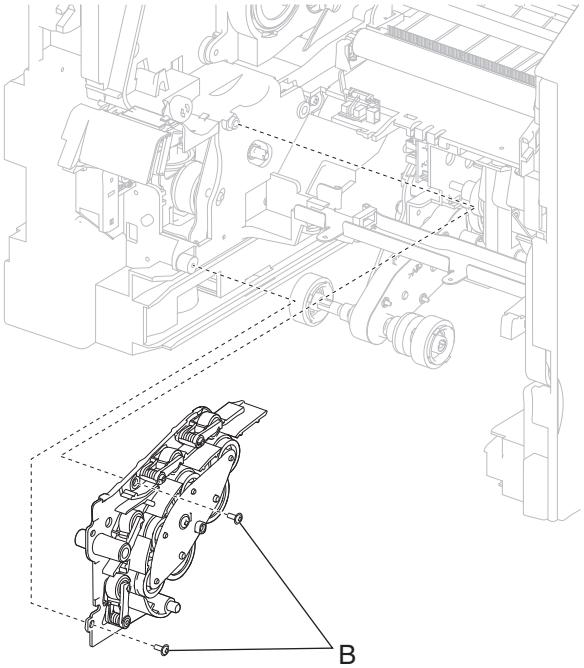

Notes:

- The adjuster screw (C) requires a hex wrench to loosen and tighten.
- The adjuster screw (C) can be accessed through the hole (D) in the system card.

7 Completely loosen the adjuster screw (C) securing the alignment assembly to the machine.

8 Remove the alignment assembly.

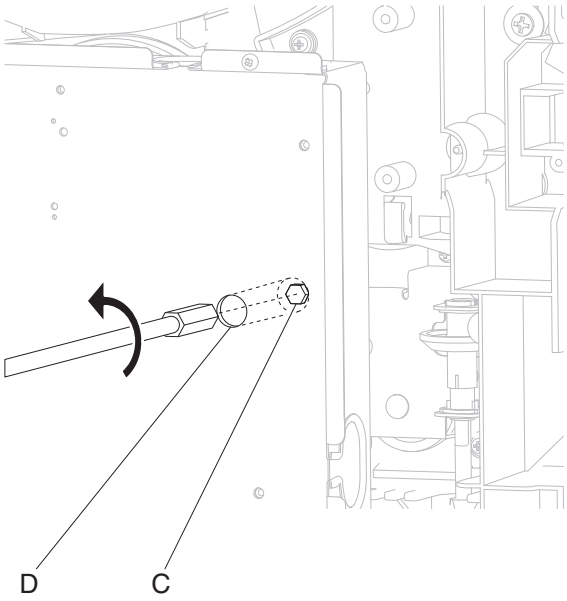

Installation warning: When replacing the alignment assembly, ensure that the media skew is properly adjusted using the adjuster screw (C), or jamming will occur. Go to **"Alignment assembly adjustment" on page 305**.

Main cooling fan removal

1 Remove the left side cover. Go to **"Left side cover removal (models X651, X652, X654, and X656)" on page 317** or **"Left side cover removal (model X658)" on page 318**.

2 Remove the six screws (A) securing the metal shield to the machine.

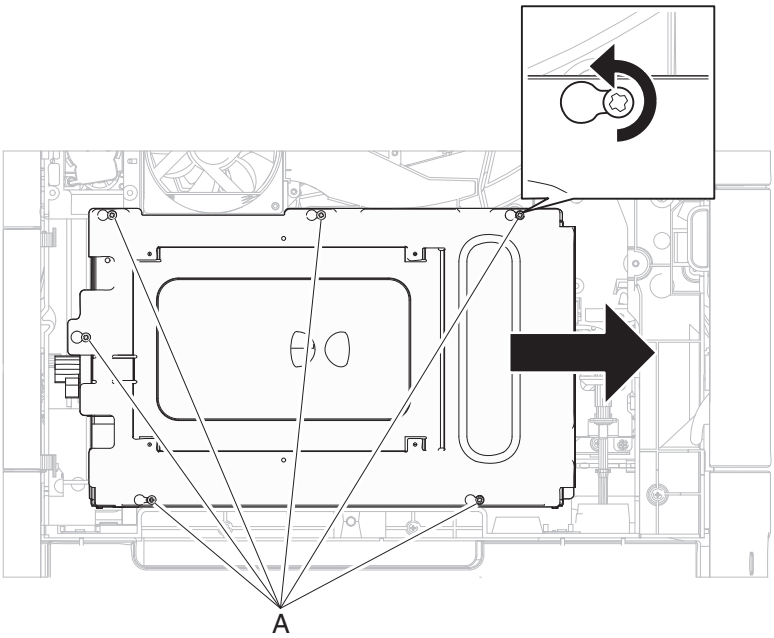

3 Move the metal shield in the direction of the arrow.

4 Remove the metal shield.

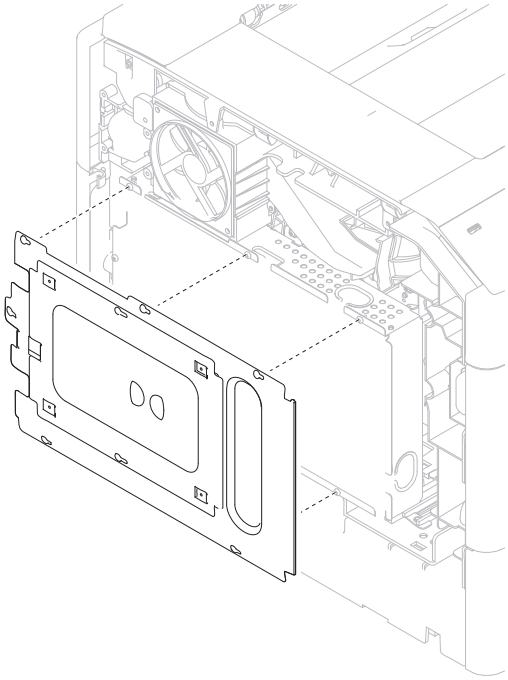

5 Remove the two screws (B) securing the fuser cooling fan to the machine.

6 Remove the fuser cooling fan.

7 Remove the fuser cooling fan connection (C).

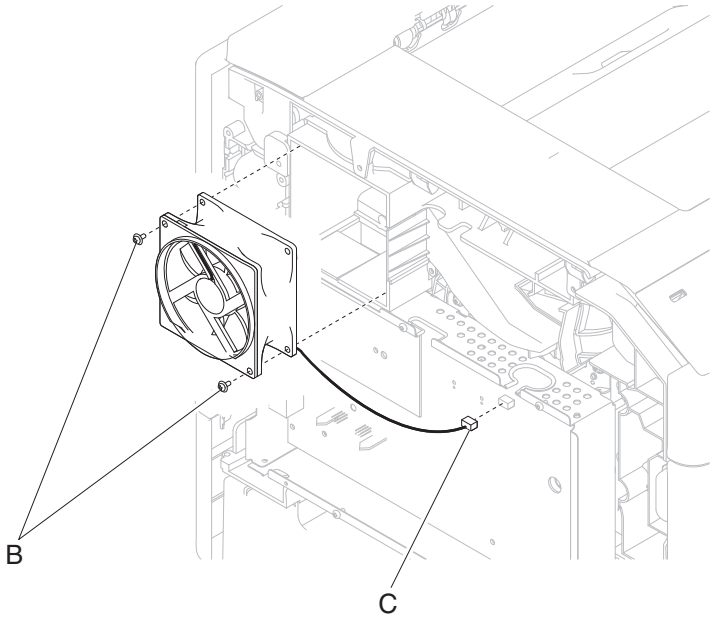

Main drive motor assembly removal

1 Remove the system card assembly. Go to **"System card assembly removal" on page 321**.

2 Remove the fuser drive release linkage. Go to **"Fuser drive release linkage removal" on page 324**.

3 Close the operator panel door assembly.

4 Remove the four screws (A) securing the main drive motor assembly to the machine.

5 Gently remove the main drive motor assembly.

6 Disconnect the connection (B) from the main drive motor assembly.

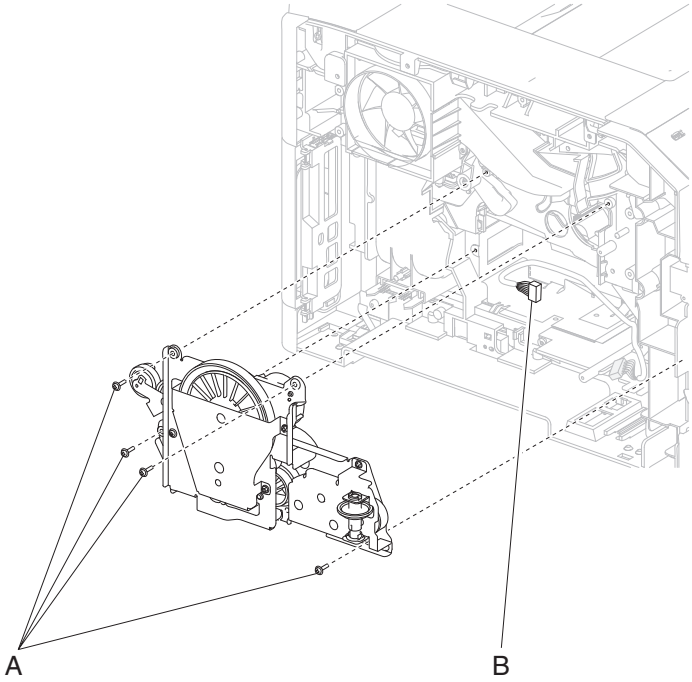

Installation warning: Ensure that all electrical connections are properly replaced.

Installation warning: When replacing the main drive motor assembly, ensure that the operator panel door assembly is in the closed position or the main drive motor assembly will not align properly and damage will occur.

Installation warning: When replacing the main drive motor assembly, ensure that all gears and drive shafts are properly aligned, or damage will occur.

MPF pick solenoid assembly removal

Note: The MPF lift plate assembly can be detached and allowed to hang by the harness. The connection does not need to be disconnected.

1 Remove the MPF lift plate assembly. Go to **"MPF lift plate assembly removal" on page 338**.

2 Remove the left side cover. Go to **"Left side cover removal (models X651, X652, X654, and X656)" on page 317** or **"Left side cover removal (model X658)" on page 318**.

3 Remove the six screws (A) securing the metal cover to the machine.

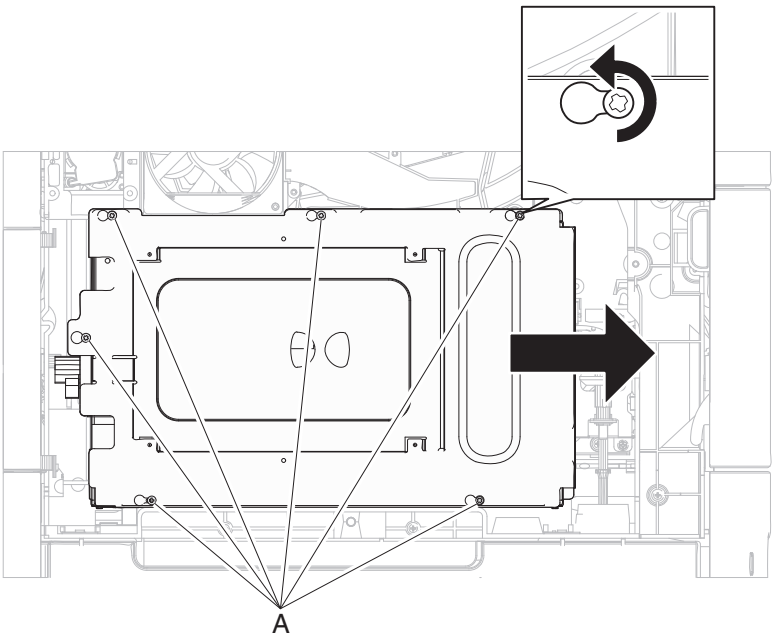

4 Remove the metal cover.

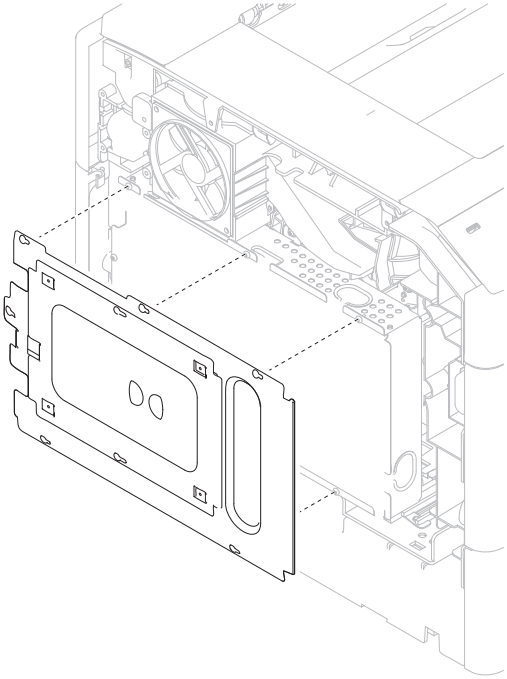

5 Remove the screw (B) securing the MPF pick solenoid assembly to the machine.

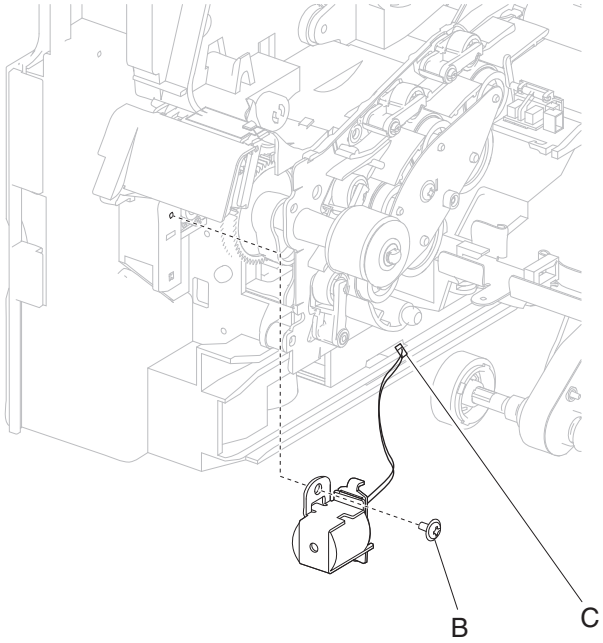

6 Remove the MPF pick solenoid assembly.

7 Disconnect the connection (C) from the MPF pick solenoid assembly.

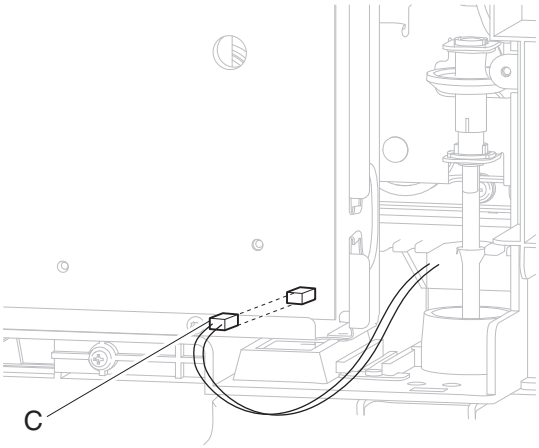

Print cartridge clamp assembly removal

Note: This procedure can be applied to the left or right printer cartridge hold down assembly.

1 Remove the laser cover. Go to **“Laser cover removal (models X651, X652, X654, and X656)” on page 325** or **“Laser cover removal (model X658)” on page 327**.

2 Remove the screw (A) securing the print cartridge clamp assembly to the machine.

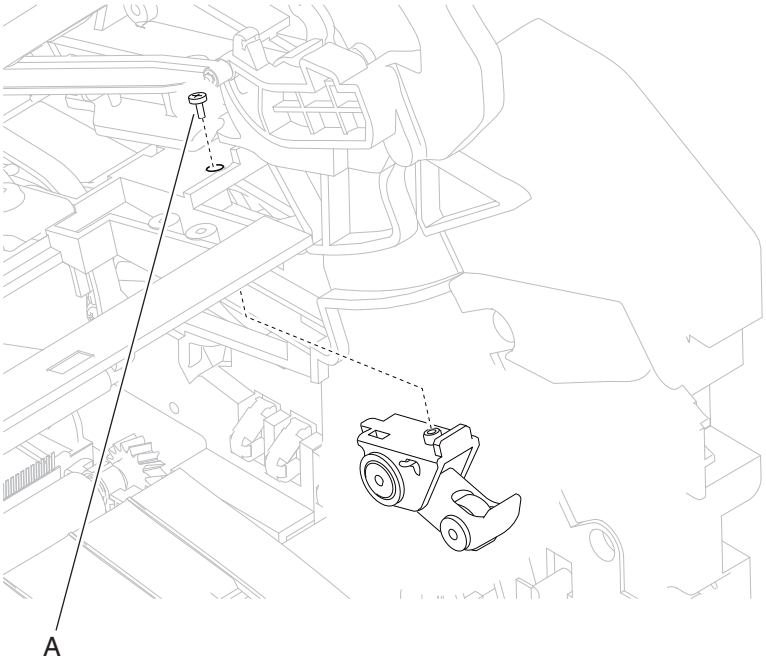

3 Remove the print cartridge clamp assembly.

Print cartridge ID connector assembly removal

1 Remove the print cartridge.

2 Remove the main drive motor assembly. Go to **“Main drive motor assembly removal” on page 312**.

3 Release the two hooks (A) securing the print cartridge ID connector assembly to the machine.

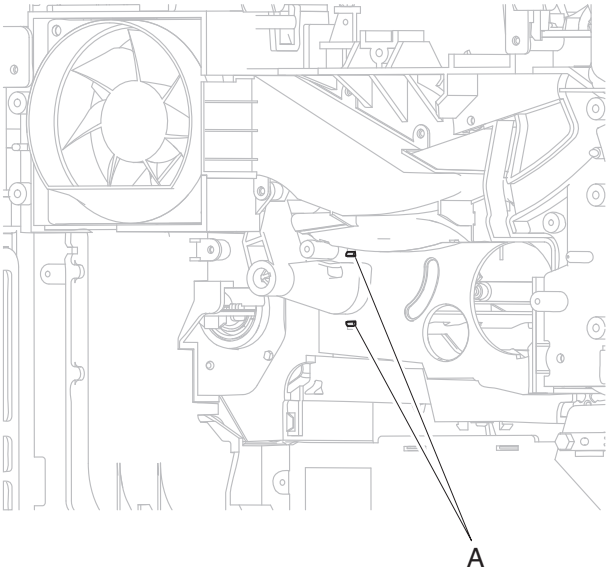

4 Remove the print cartridge ID connector assembly.

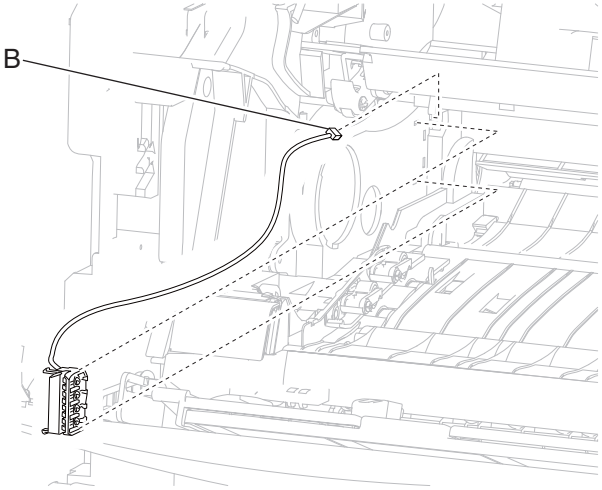

5 Disconnect the connection (B) from the print cartridge ID connector assembly.

Left side cover removal (models X651, X652, X654, and X656)

1 Remove the rear door assembly. Go to **"Rear door assembly removal" on page 368**.

2 Remove the rear lower door. Go to **"Rear lower cover removal" on page 364**.

3 Remove the paper tray.

4 Open the MPF door.

5 Open the cartridge access door.

6 Remove the three screws (A) securing the left side cover to the machine.

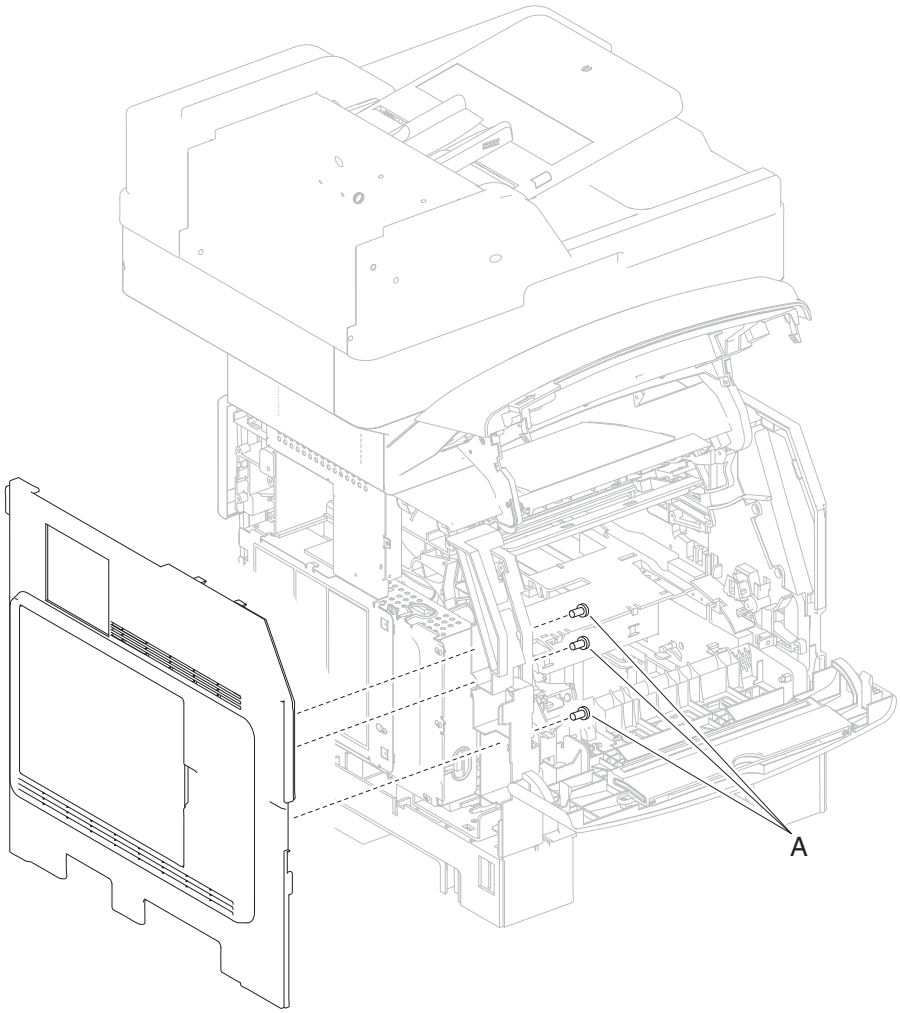

7 Remove the left side cover by pulling out the tabs on the top and bottom and by pulling the cover out of its rear hinges.

Left side cover removal (model X658)

1 Remove the left rear corner cover. Go to **"Left rear corner cover removal (model X658)" on page 366**.

2 Open the cartridge access door.

3 Release the two tabs (A) in the front.

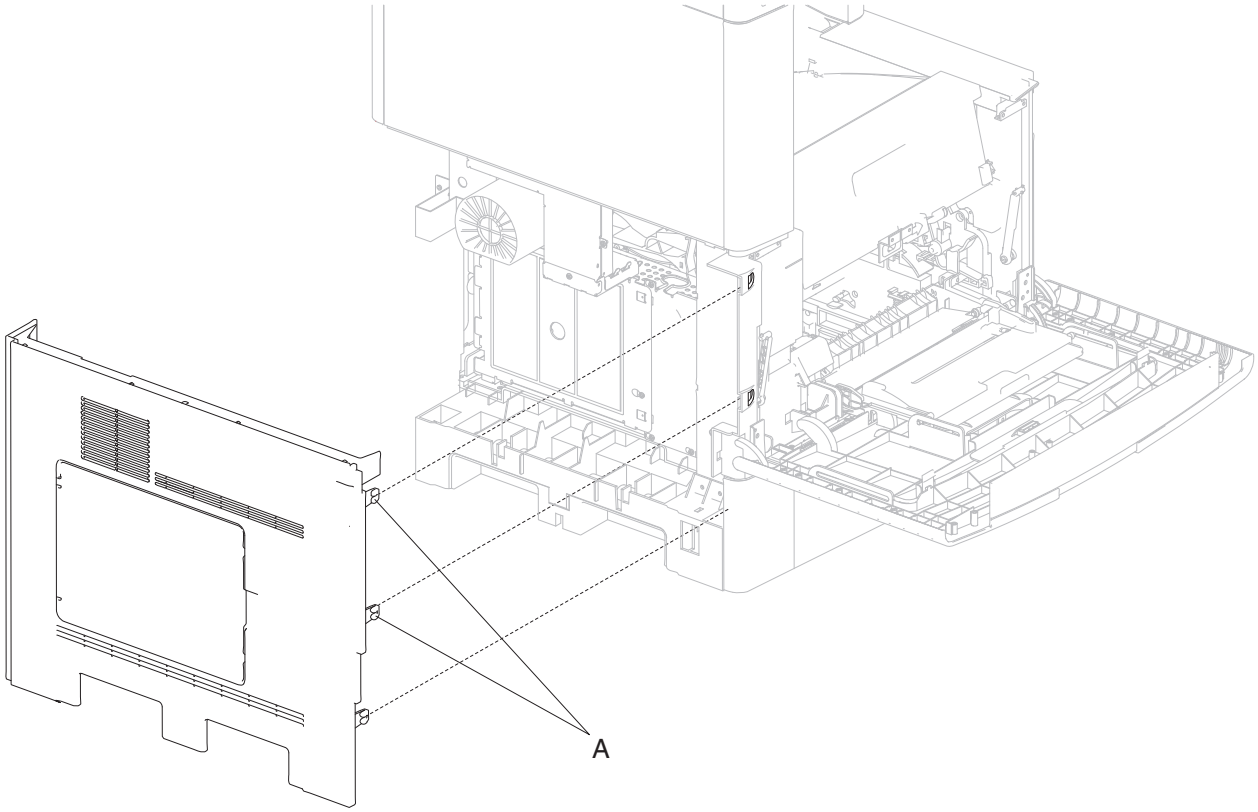

4 Remove the left side cover.

Switch (media size) assembly removal

1 Remove the left side cover. Go to **"Left side cover removal (models X651, X652, X654, and X656)" on page 317** or **"Left side cover removal (model X658)" on page 318**.

2 Remove the six screws (A) securing the metal cover to the machine.

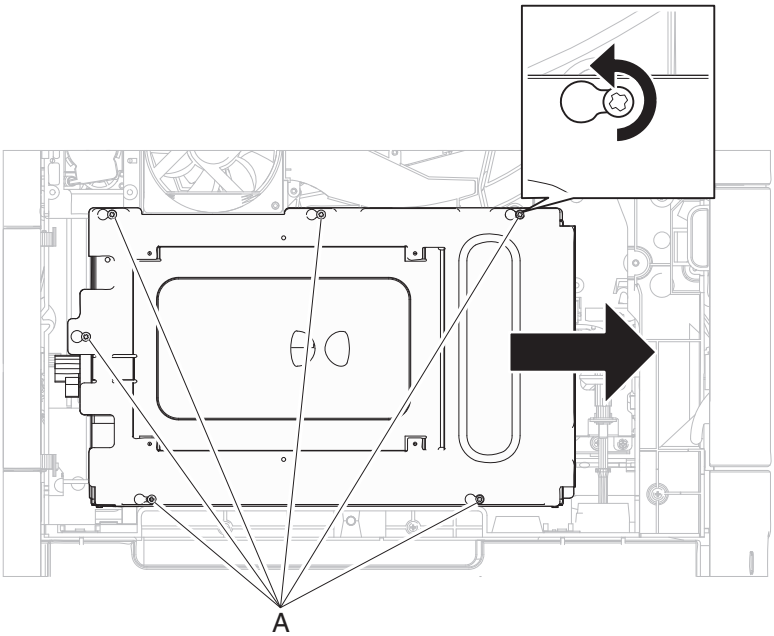

3 Remove the metal cover.

4 Remove the media tray.

5 Gently place the machine on the left of right side.

6 Release the two hooks (B) securing the switch (media size) assembly to the machine.

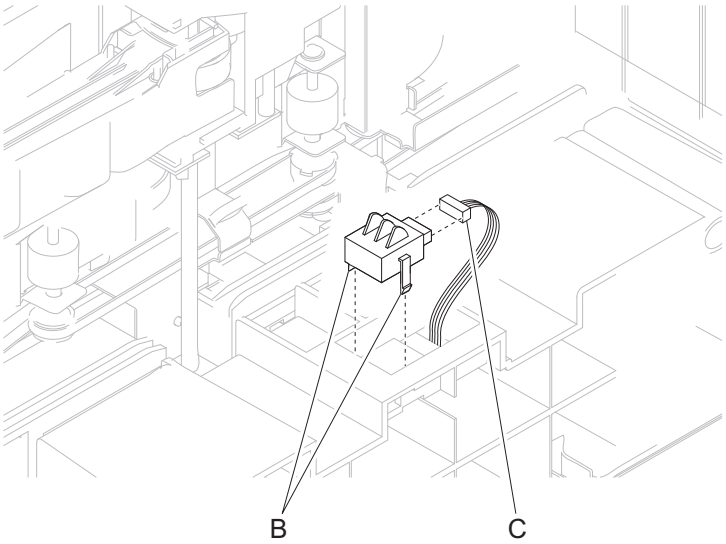

7 Remove the switch (media size) assembly.

8 Disconnect the connection (C) from the switch (media size) assembly.

System card assembly removal

Warning—Potential Damage: When replacing the system card assembly and the operator panel assembly, make sure to:

- Replace only one component at a time.
- Perform a POR every after each component is replaced.

If this procedure is not followed, then the printer will be rendered inoperable.

These components can be used as a method of troubleshooting as long as the machine is booted into diagnostic mode or is operating in diagnostic mode. Once a component has been installed in a machine and powered up into user mode, it cannot be used in another machine. It must be returned to the manufacturer.

CAUTION—POTENTIAL INJURY: This product contains a lithium battery. THERE IS A RISK OF EXPLOSION IF THE BATTERY IS REPLACED BY AN INCORRECT TYPE. Discard used batteries according to the battery manufacturer's instructions and local regulations.

1. Remove the left side cover. Go to **"Left side cover removal (models X651, X652, X654, and X656)" on page 317** or **"Left side cover removal (model X658)" on page 318**.
2. Remove the six screws (A) securing the metal shield to the machine.

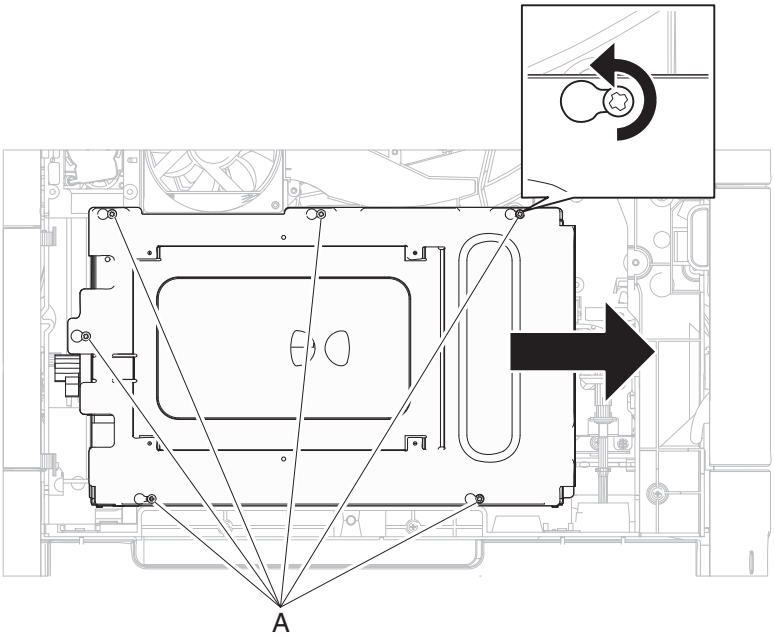

3. Slide the metal shield in the direction of the arrow.

4 Remove the metal shield.

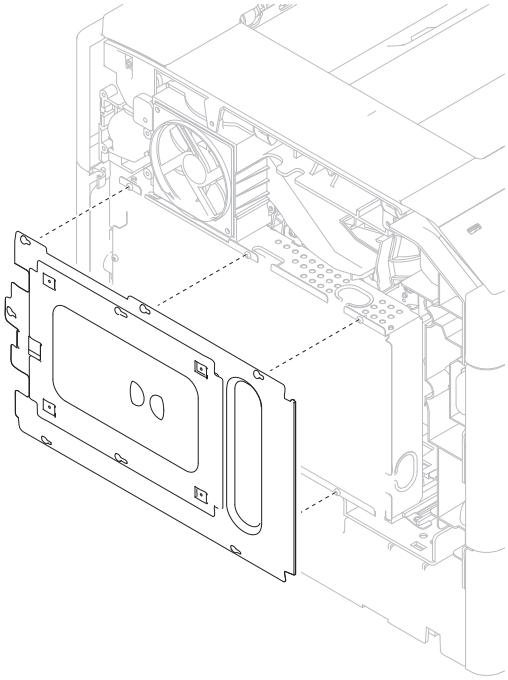

Warning—Potential Damage: When disconnecting all the electrical connections, ensure that the connectors and harnesses are not damaged.

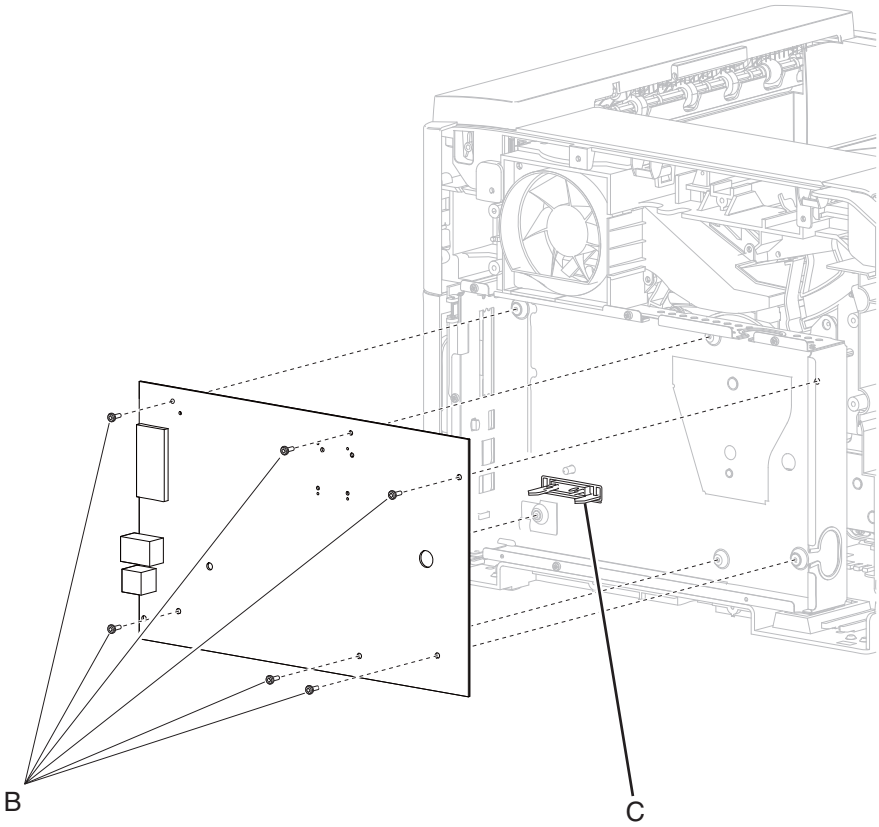

5 Disconnect all connections from the system card assembly.

Note: There are two fine thread screws and four course thread screws securing the system card assembly to the machine. Ensure that these screws are properly reinstalled.

6 Remove the six screws (B) securing the system card assembly to the machine.

Warning—Potential Damage: When removing the system card assembly from the machine, ensure that the LVPS assembly connection (C) is not damaged.

7 Remove any remaining screws securing the system card assembly to the metal box.

8 Remove the system card assembly.

Installation warning: Ensure that all ground wires are properly replaced.

Installation warning: When replacing the system card assembly, ensure that the LVPS assembly connections (C) are properly aligned and inserted into the system card assembly, or damage will occur.

Right side removals

Duplex cooling fan removal

1 Remove the right side cover. Go to **"Right side cover removal (models X651, X652, X654, and X656)" on page 332** or **"Right side cover removal (model X658)" on page 331**.

2 Remove the screw (A) securing the duplex cooling fan to the machine.

3 Disconnect the connector (B) from the duplex cooling fan.

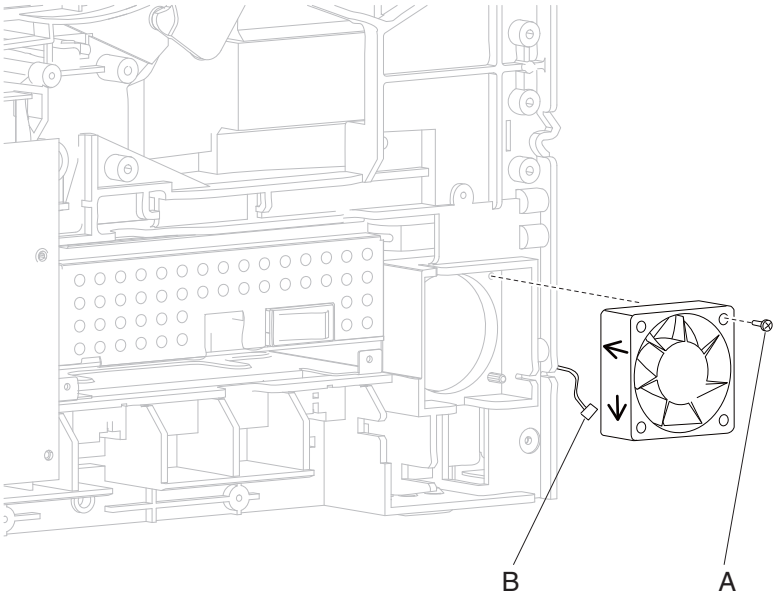

4 Remove the duplex cooling fan.

Installation warning: When replacing the duplex cooling fan, ensure that it is installed as shown in the picture.

Fuser drive release linkage removal

1 Remove the system card assembly. Go to **"System card assembly removal" on page 321**

2 Gently unsnap the upper end of the fuser drive release linkage from the machine.

3 Rotate the fuser drive release linkage 90° to release the lower end of the fuser drive release linkage from the machine.

4 Remove the fuser drive release linkage.

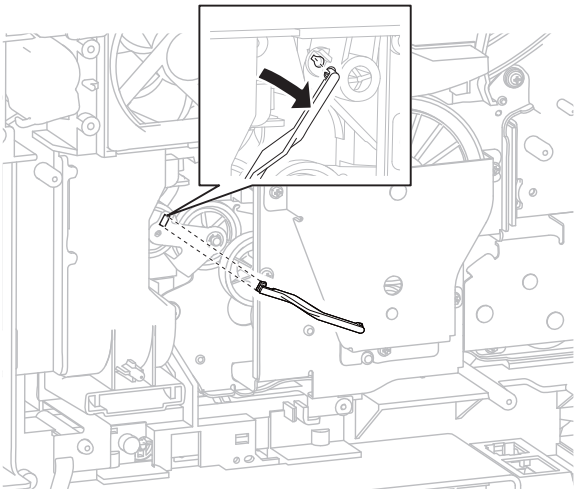

HVPS card assembly removal

1 Remove the right side cover. Go to **"Right side cover removal (models X651, X652, X654, and X656)" on page 332** or **"Right side cover removal (model X658)" on page 331**.

2 Remove the four screws (A) securing the HVPS card assembly to the machine.

3 Remove the HVPS card assembly.

4 Remove connection (B) and the two high voltage connections (C) from the HVPS card assembly.

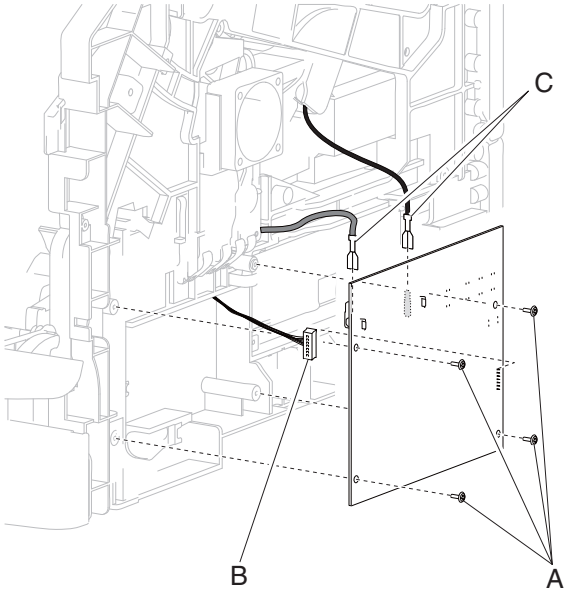

Installation warning: When replacing the HVPS card assembly, ensure that the two high voltage connections (C) are properly replaced.

Laser cover removal (models X651, X652, X654, and X656)

1 Remove the ADF unit assembly. Go to **"ADF unit assembly removal (models X651, X652, X654, and X656)" on page 560**.

2 Remove the scanner unit assembly. Go to **"Scanner unit assembly removal (models X651, X652, X654, and X656)" on page 531**.

3 Remove the scanner control card. Go to **"Scanner controller card assembly removal (models X651, X652, X654, and X656)" on page 520**.

4 Remove the four screws (A) from the controller card page.

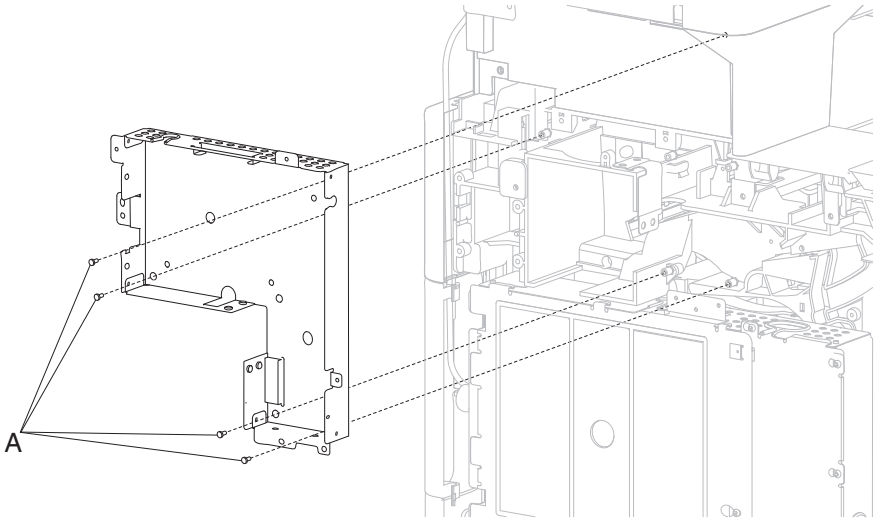

5 Remove the controller card cage.

6 Remove the three screws (B) on either side of the laser cover.

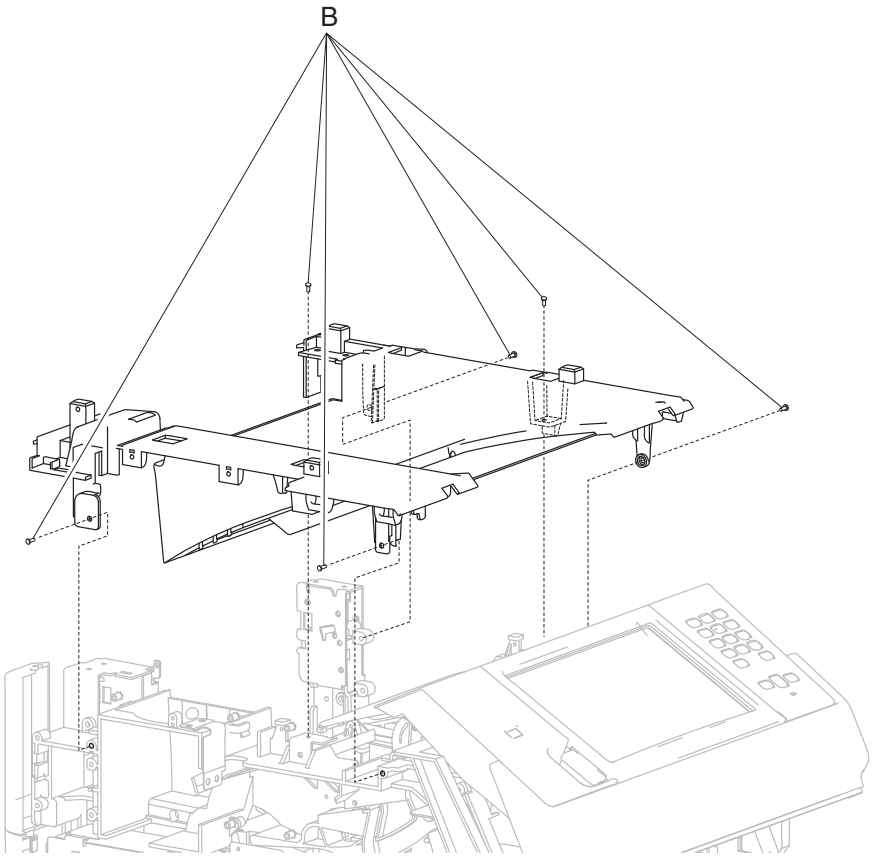

7 Remove the redrive assembly. Go to **"Redrive assembly removal" on page 374**.

8 Remove the sensor (ADF media exit) bracket assembly. Go to **"Sensor (ADF media exit) bracket assembly removal (model X651)" on page 549**.

9 Open the front operator panel door.

10 Remove the laser cover.

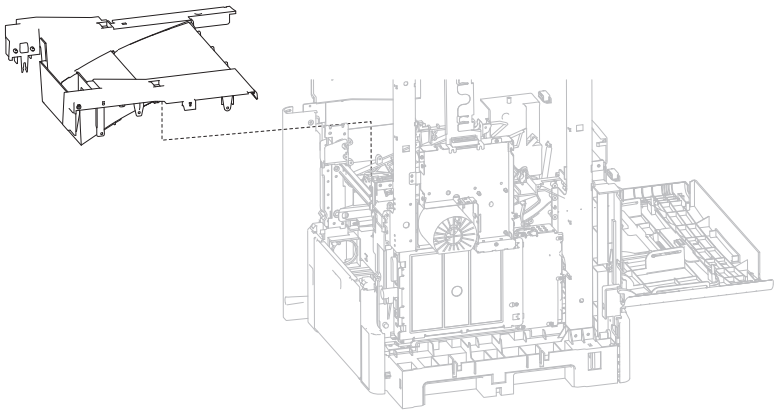

Laser cover removal (model X658)

1. Remove the ADF unit assembly. Go to **“ADF unit assembly removal (model X658)” on page 561**.
2. Remove the scanner unit assembly. Go to **“Scanner unit assembly removal (model X658)” on page 533**.
3. Remove the scanner control card. Go to **“Scanner controller card assembly removal (model X658)” on page 517**.
4. Remove the redrive assembly. Go to **“Redrive assembly removal” on page 374**.
5. Remove the five screws (A) on the left securing the laser cover.

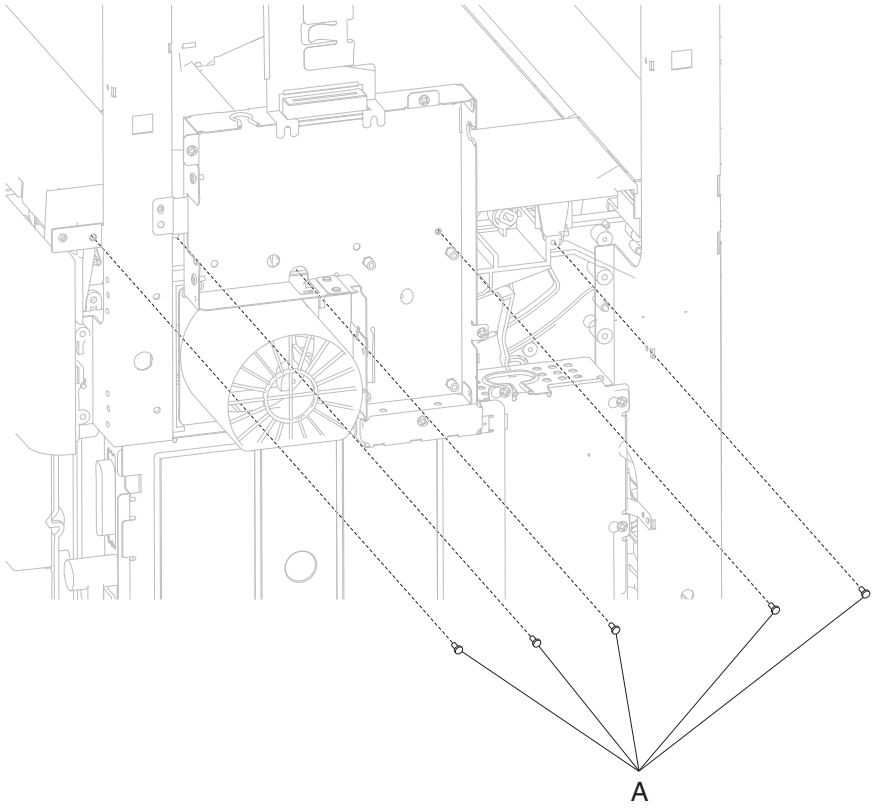

6 Remove the four screws (B) on the right securing the laser cover.

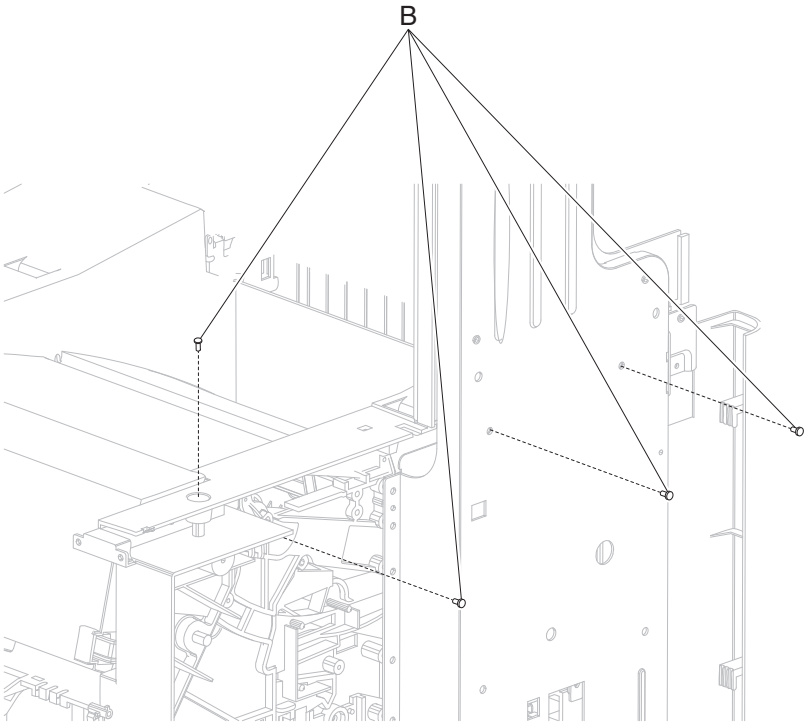

7 Remove the sensor (ADF media exit) bracket assembly.

8 Remove the print cartridge cover. Go to **"Print cartridge cover assembly removal (model X658)" on page 355**.

9 Remove the laser cover.

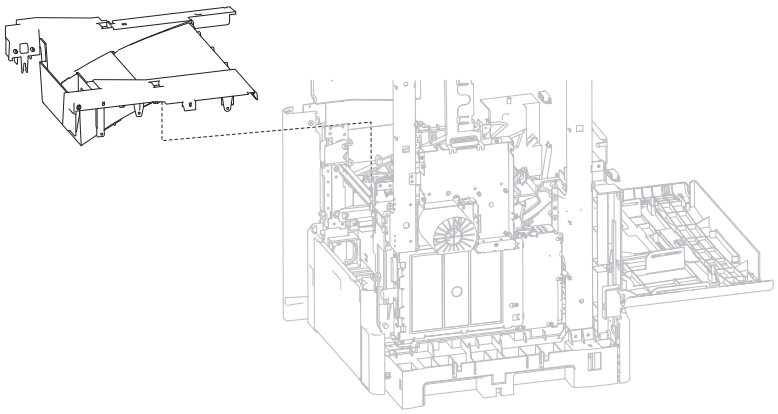

LVPS card assembly removal

Warning—Potential Damage: When replacing the LVPS card assembly, ensure that the voltage selection switch is set to the proper setting, or damage will occur.

1 Remove the rear door assembly. Go to **"Rear door assembly removal" on page 368**.

2 Remove the right side cover. Go to **"Right side cover removal (models X651, X652, X654, and X656)" on page 332** or **"Right side cover removal (model X658)" on page 331**.

3 Disconnect the connector (A) from the LVPS card assembly.

4 Remove the two screws (B) from the LVPS card assembly.

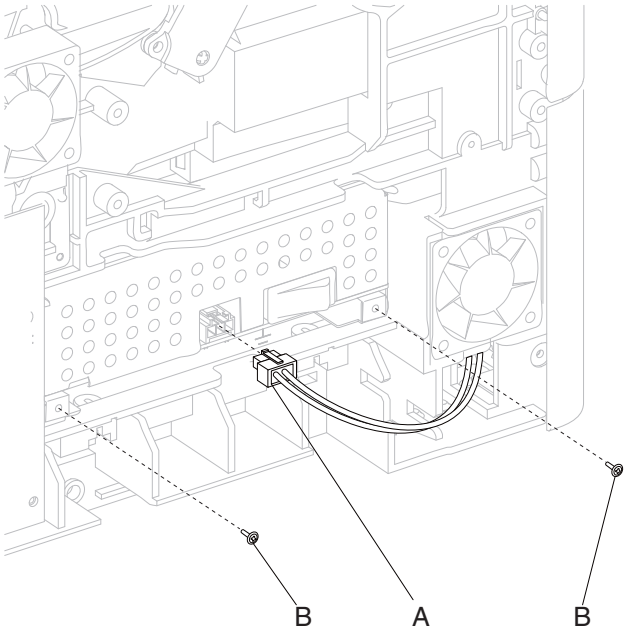

5 Gently pull the LVPS card assembly from the machine.

6 Disconnect the connector (C) from the LVPS card assembly.

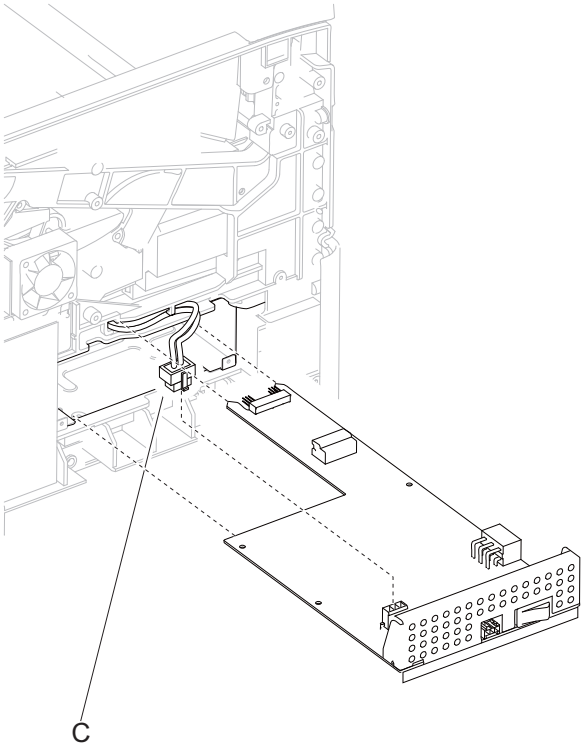

7 Remove the LVPS card assembly.

Installation warning: When replacing the LVPS card assembly, ensure that all connections are replaced.

Installation warning: When replacing the LVPS card assembly, ensure that the connector pins (D) properly engage the system card.

Installation warning: When replacing the LVPS card assembly, ensure that the voltage selection switch (E) is set to the proper setting, or damage will occur.

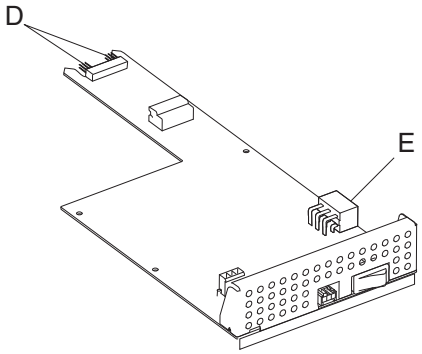

LVPS cooling fan removal

1 Remove the LVPS card assembly. Go to **"LVPS card assembly removal" on page 328**.

2 Remove the four screws (A) securing the LVPS cooling fan.

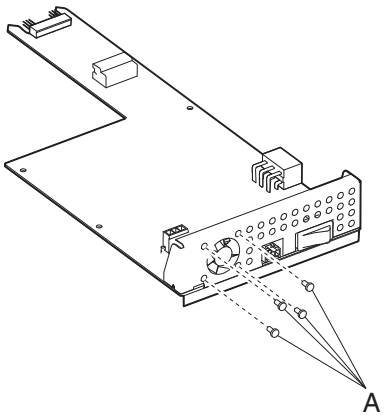

3 Disconnect the connection from the LVPS cooling fan.

4 Remove the LVPS cooling fan.

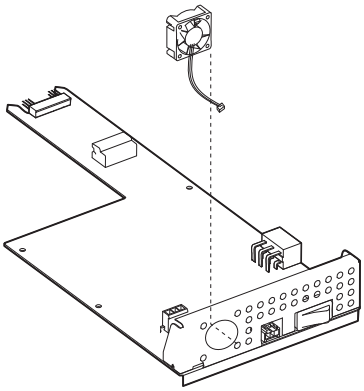

Print cartridge cooling fan removal

1 Remove the right side cover. Go to **“Right side cover removal (models X651, X652, X654, and X656)” on page 332** or **“Right side cover removal (model X658)” on page 331**.

2 Remove the screw (A) securing the print cartridge cooling fan to the machine.

3 Remove the print cartridge cooling fan.

4 Disconnect the connection (B) from the print cartridge cooling fan.

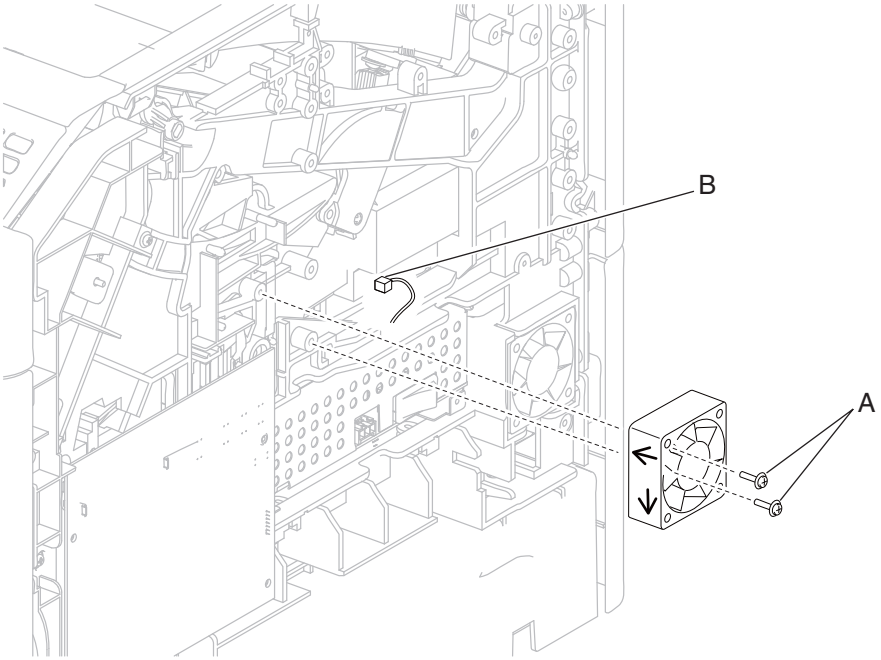

Installation warning: When replacing the print cartridge cooling fan, ensure that it is installed as shown in the picture.

Right side cover removal (model X658)

1 Remove the left rear corner cover. Go to **“Left rear corner cover removal (model X658)” on page 366**.

2 Open the front door.

3 Open the cartridge access door.

4 Remove the screw (A), and pull the side cover, right up and out to remove.

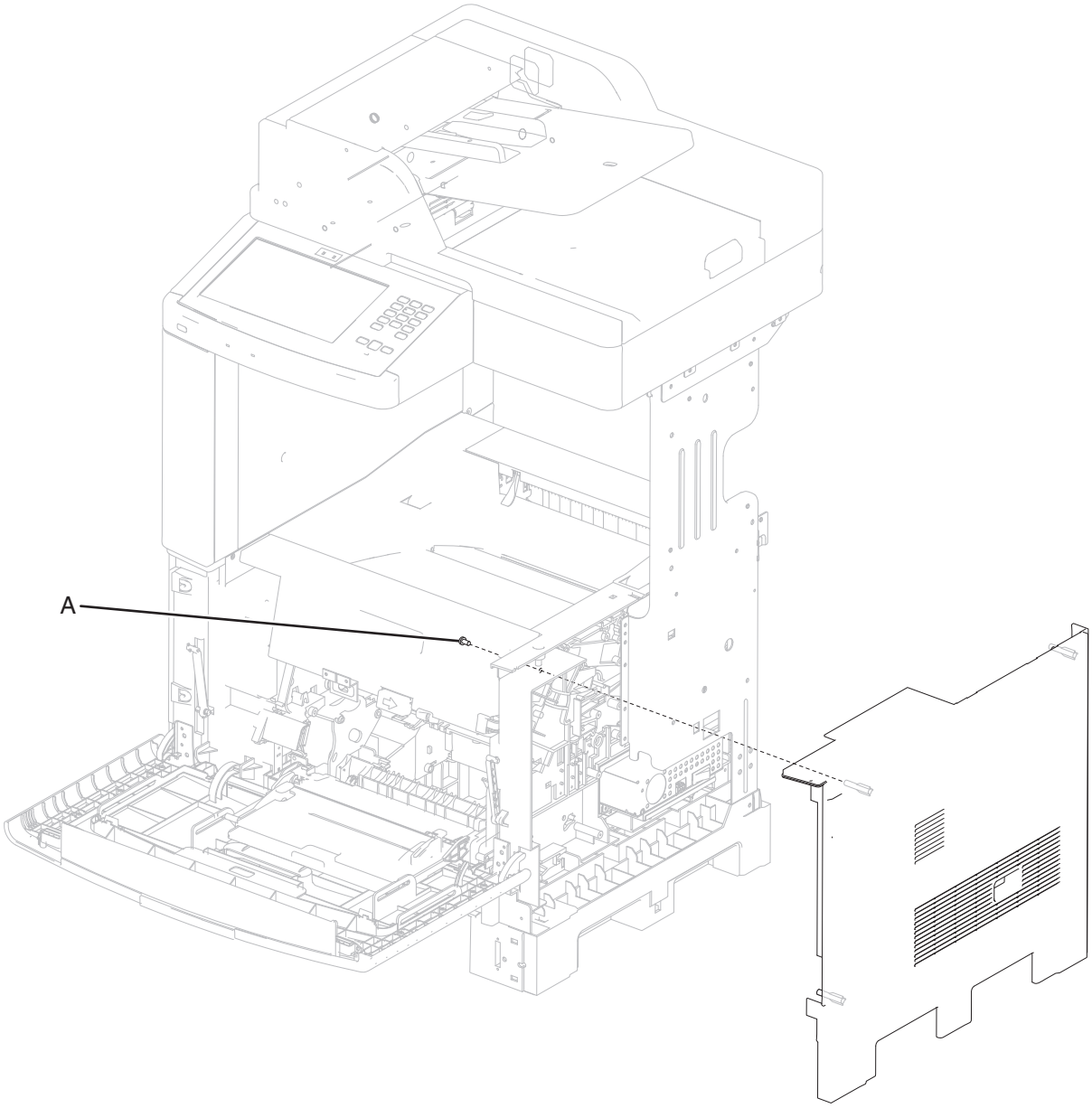

Right side cover removal (models X651, X652, X654, and X656)

1 Remove the rear door assembly. Go to **"Rear door assembly removal" on page 368**.

2 Remove the rear lower cover. Go to **"Rear lower cover removal" on page 364**.

3 Open the paper tray.

4 Open the MPF door.

5 Open the front door assembly.

6 Remove the three screws (A) from the front.

7 Remove the screw (B) from the rear.

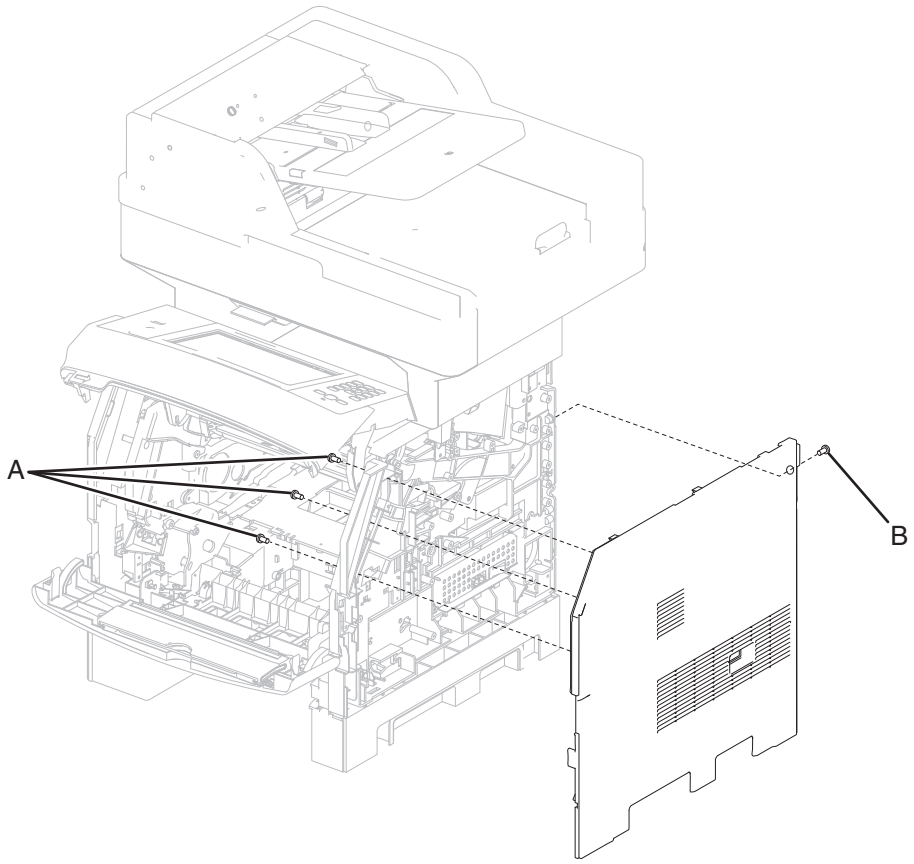

8 Firmly grasp the cover from the top, and then pull it out to remove.

Sensor (toner empty) removal

1 Remove the HVPS card assembly. Go to **"HVPS card assembly removal" on page 324**.

2 Remove the screw (A) securing the sensor (toner empty) to the machine.

3 Remove the sensor (toner empty).

4 Disconnect the connection (B) from the sensor (toner empty).

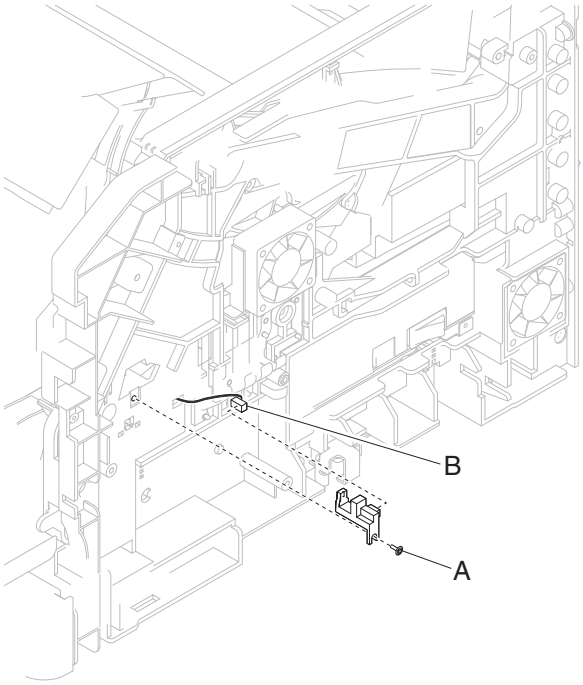

Sensor (input) removal

1 Remove the inner deflector. Go to **"Inner deflector removal" on page 337**.

2 Release the hooks (A) securing the sensor (input) to the machine.

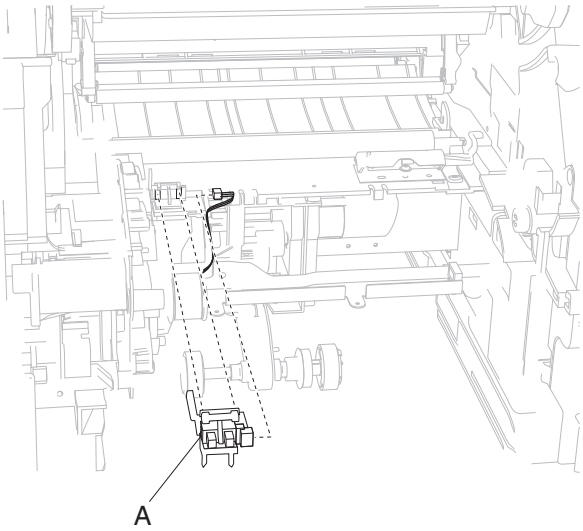

3 Remove the sensor (input).

4 Disconnect the connection (B) from the sensor (input).

Front side removals

Charge roll assembly removal

Warning—Potential Damage: When removing the charge roll assembly, avoid touching the charge roll surface.

1. Open the MPF door assembly.
2. Open the operator panel front cover assembly.
3. Detach the left side of the charge roll assembly from the machine.

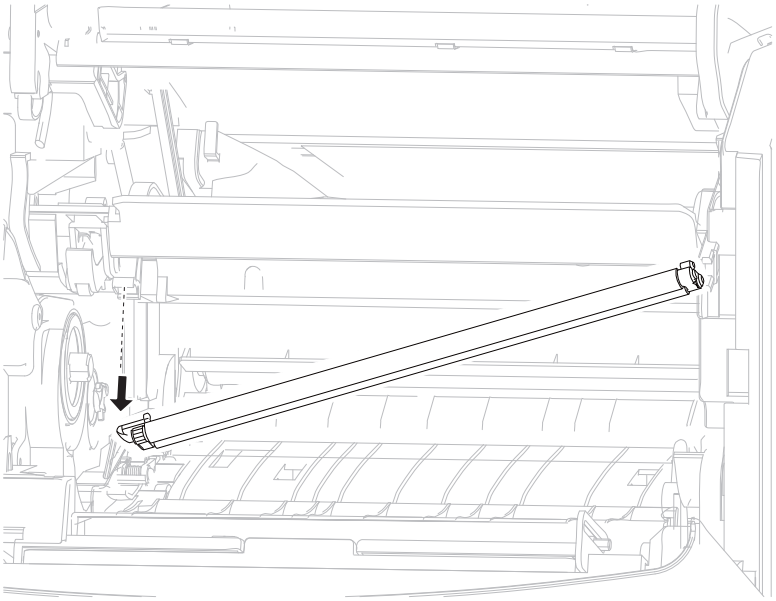

4 Detach the right side of the charge roll assembly from the machine.

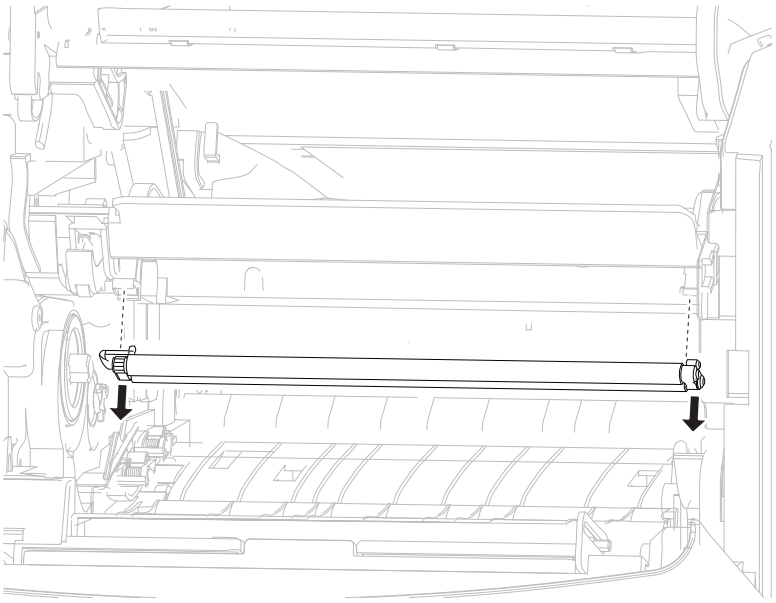

5 Remove the charge roll assembly.

Installation warning: When replacing the charge roll assembly, avoid touching the charge roll surf

Inner deflector removal

Note: The MPF lift plate assembly can be detached and allowed to hang by the harness. The connection to the MPF lower deflector assembly does not need to be disconnected.

1 Remove the MPF lift plate assembly. Go to **“MPF lift plate assembly removal” on page 338**.

2 Release the two hooks (A) securing the lower portion of the inner deflector to the machine.

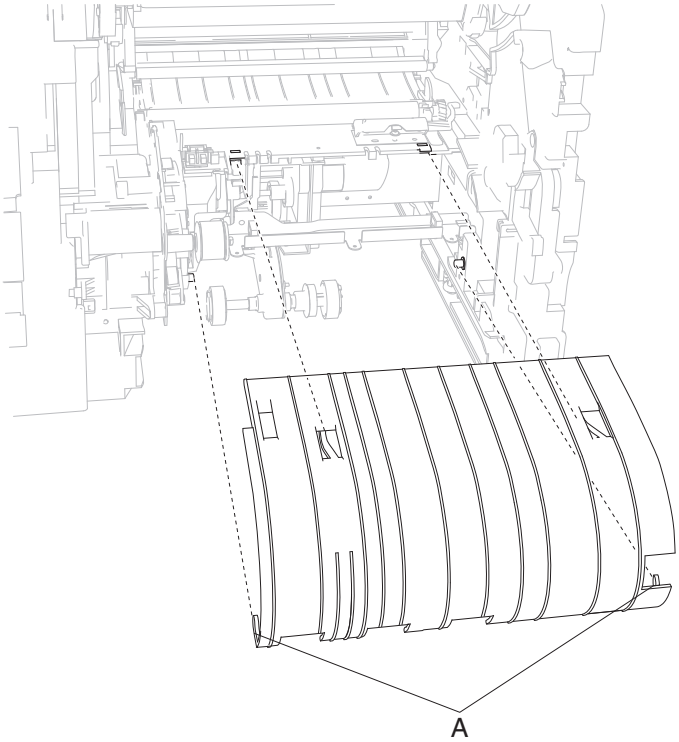

3 Remove the inner deflector.

Installation warning: When replacing the inner deflector, ensure that it is properly installed, or jamming will occur.

Media turn guide removal

1 Remove the MPF tray door assembly. Go to **“MPF tray door assembly removal (models X651, X652, X654, X656)” on page 340** or **“MPF tray door assembly removal (model X658)” on page 343**.

2 Gently bend the left side of the media turn guide to release the hook (A) as shown in the picture.

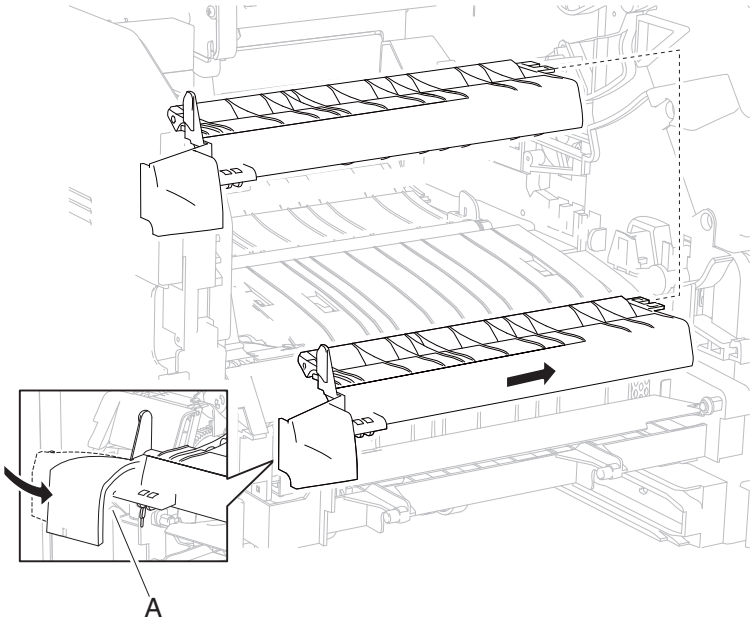

3 While gently bending the media turn guide, move the media turn guide in the direction of the arrow.

4 Remove the media turn guide.

Installation warning: When replacing the media turn guide, ensure that it is properly installed, or jamming will occur.

MPF lift plate assembly removal

1 Remove the media turn guide. Go to **“Media turn guide removal” on page 338**.

2 Remove the four screws (A) securing the MPF lift plate assembly to the machine.

3 Gently detach the MPF lift plate assembly.

4 Disconnect the connector (B) from the MPF lower deflector assembly.

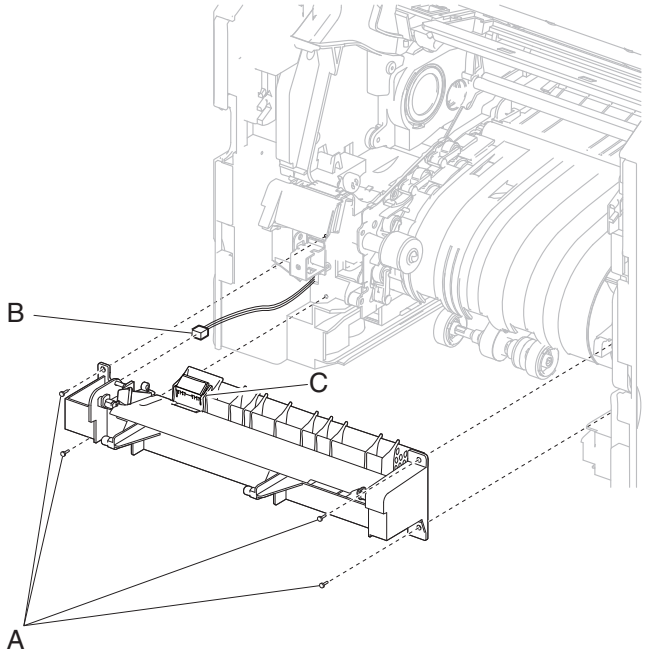

5 Remove the MPF lift plate assembly.

Installation warning: When replacing the MPF lift plate assembly, ensure that the lever (C) is held down when reinstalling the MPF lift plate assembly, or damage will occur.

Installation warning: When replacing the MPF lift plate assembly, ensure that the MPF pick solenoid assembly does not become damaged.

MPF media out actuator removal

1 Remove the media turn guide. Go to **"Media turn guide removal" on page 338**.

2 Gently unsnap the MPF media out actuator from the machine.

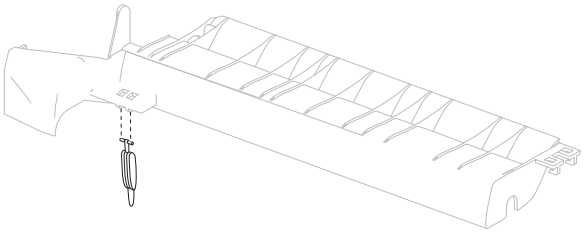

3 Remove the media out actuator.

MPF pick roll assembly removal

1 Remove the media turn guide. Go to **"Media turn guide removal" on page 338**.

2 Remove the E-clip (A) securing the MPF print roll assembly to the machine.

3 Remove the plastic washer (B).

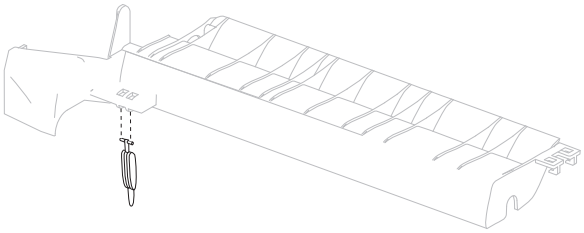

4 Remove the MPF pick roll assembly.

Installation warning: When replacing the MPF pick roll assembly, do not touch the rubber surface.

MPF tray door assembly removal (models X651, X652, X654, X656)

1 Open the MPF tray door.

2 Carefully pry the left and right manual feeder tabs out of the slots in the manual feed tray.

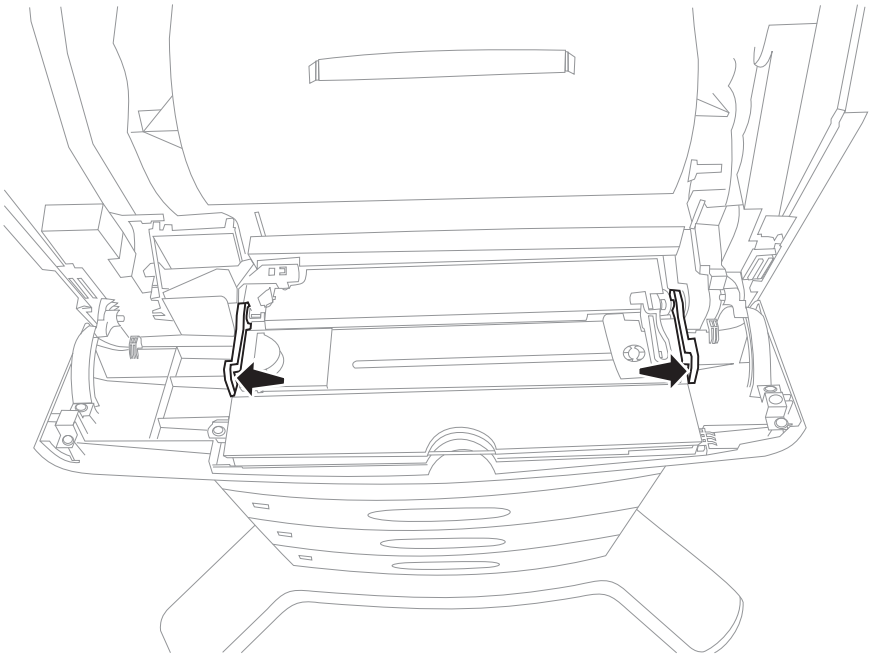

3 Rotate the manual feeder vertical and pull straight up to remove the feeder.

4 Slide the MPF input tray towards the front, and remove the two clips (A) securing the MPF door hinges.

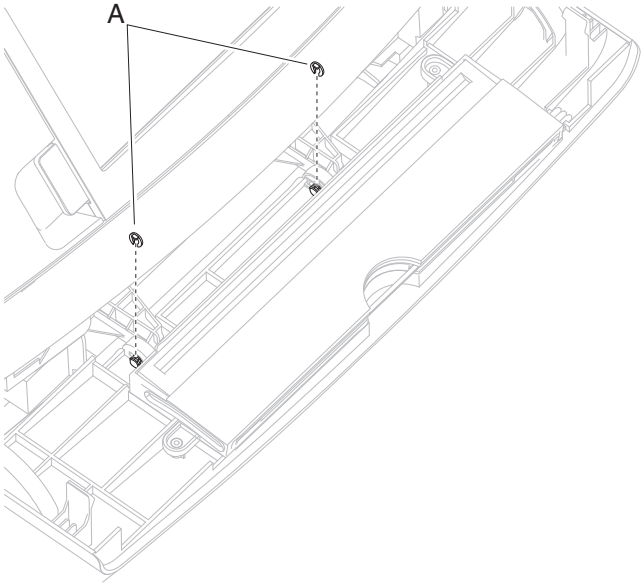

5 Bow the door slightly to remove the right side hinge pin.

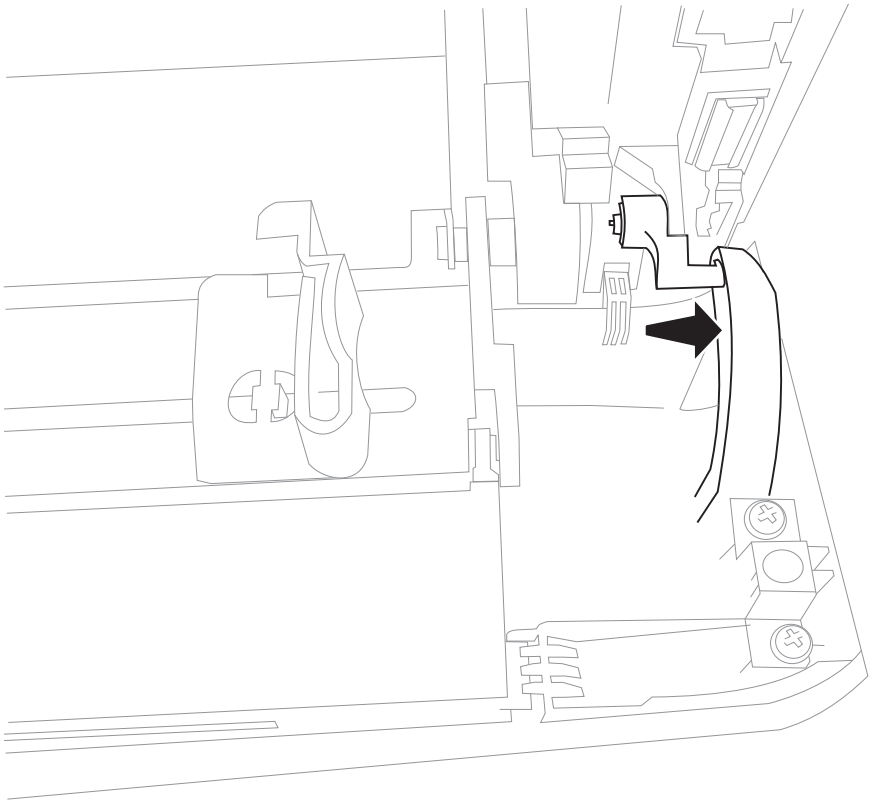

6 Slide the door assembly to the left until the door clears all the pins (B).

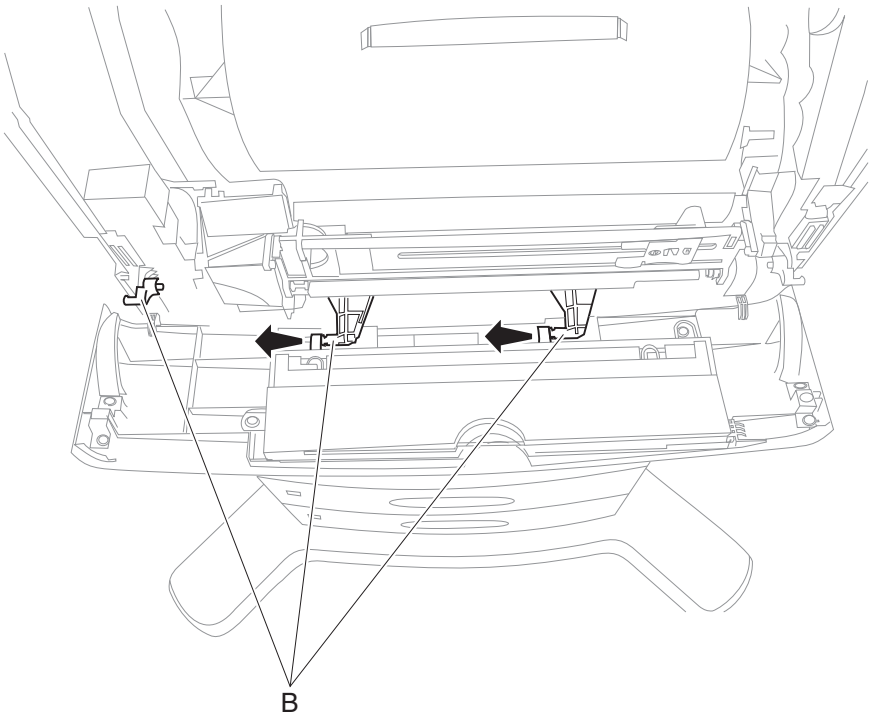

7 Continue to slide the MPF tray door assembly to the left, and remove.

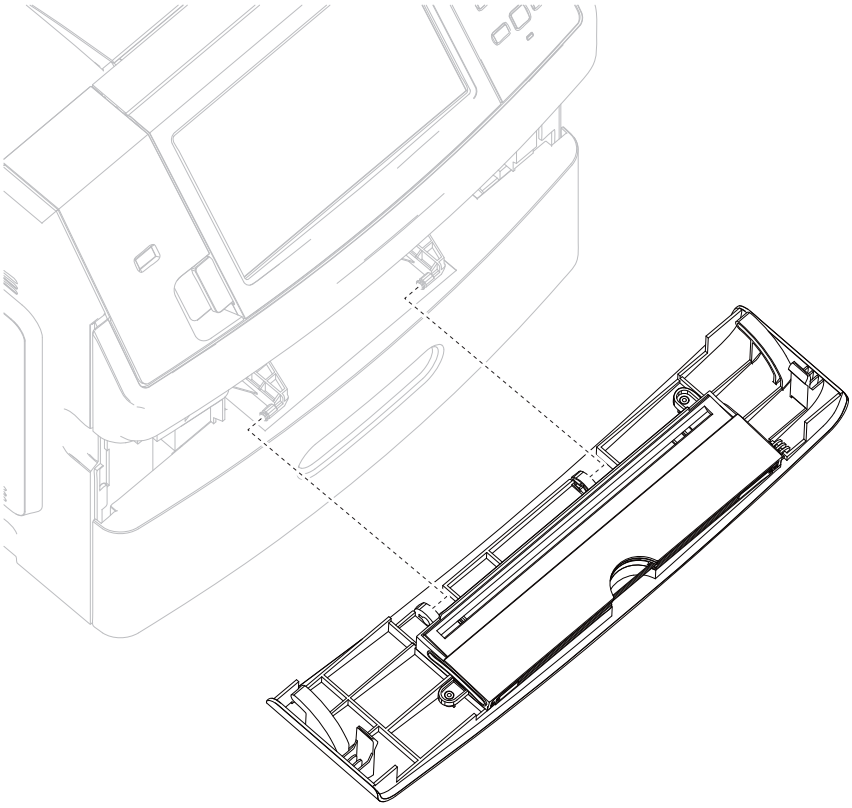

MPF tray door assembly removal (model X658)

1 Open the MPF tray door assembly.

2 Remove the MPF media guide assembly. Go to **"MPF media guide assembly removal (model X658)" on page 344**.

3 Remove the two retaining clips (A) from the hinges on the MPF tray door.

4 Remove the left clip (B) securing the front door tension link.

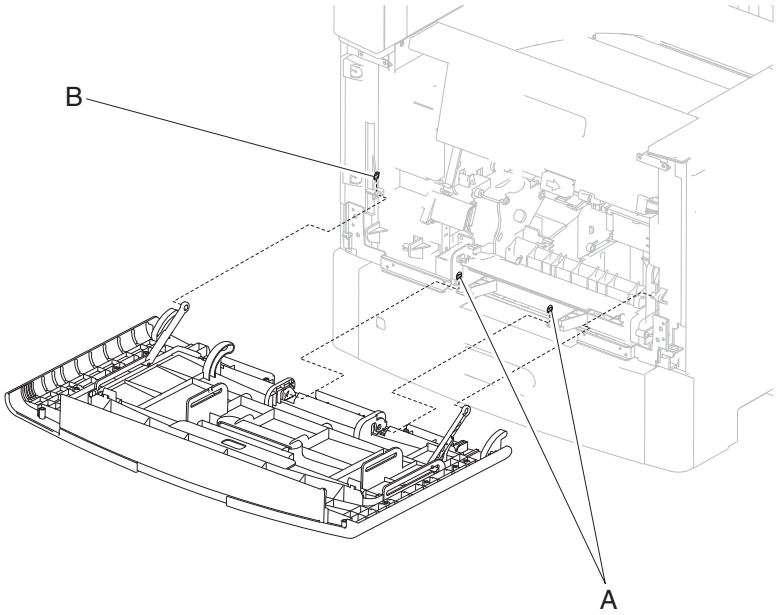

5 Remove the left tension link.

6 Pull the right tension link from the hinge.

7 Slide the MPF tray door assembly to the left until all the bosses clear the hinges.

8 Angle the left side of the MPF tray door assembly down, and slide it back to the right until the door is clear of the right hinge.

9 Remove the MPF tray door assembly.

MPF media guide assembly removal (model X658)

1 Open the MPF feeder door.

2 Remove the two tabs (A) from the slots to disconnect the MPF media guide assembly.

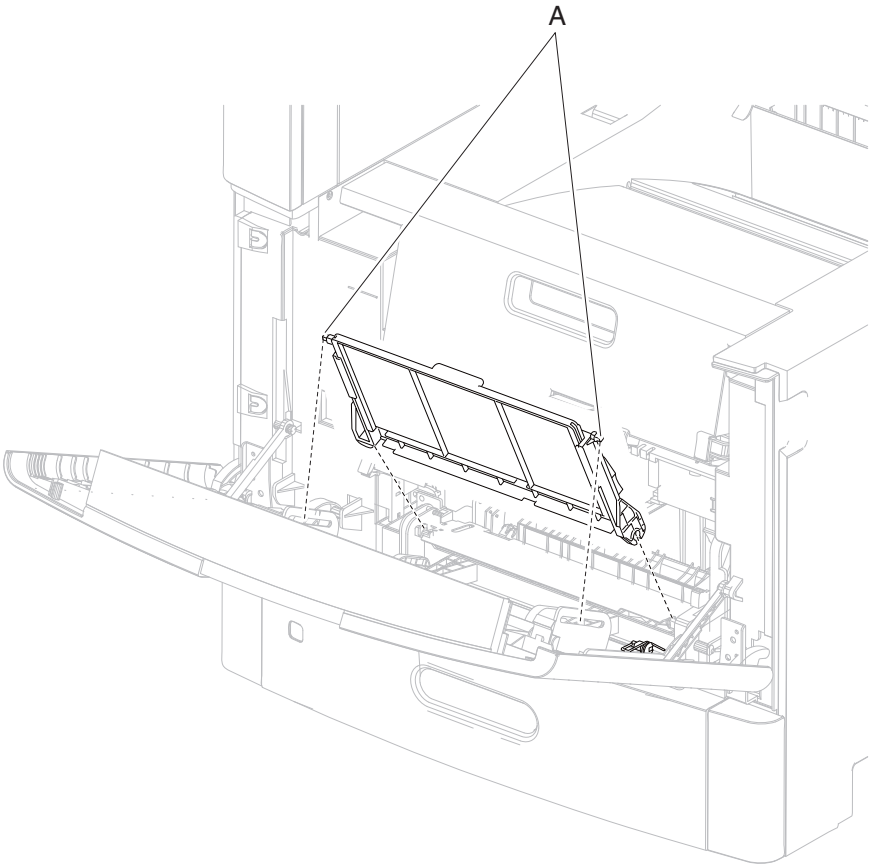

3 Push the spring on the right side down, and then remove the MPF media guide assembly by rotating the assembly vertical and lift up.

Operator panel cover latch assembly removal (models X651, X652, X654, X656)

1 Lift the operator panel cover assembly.

2 Remove the ten screws (A) securing the operator panel cover latch assembly to the operator panel cover assembly.

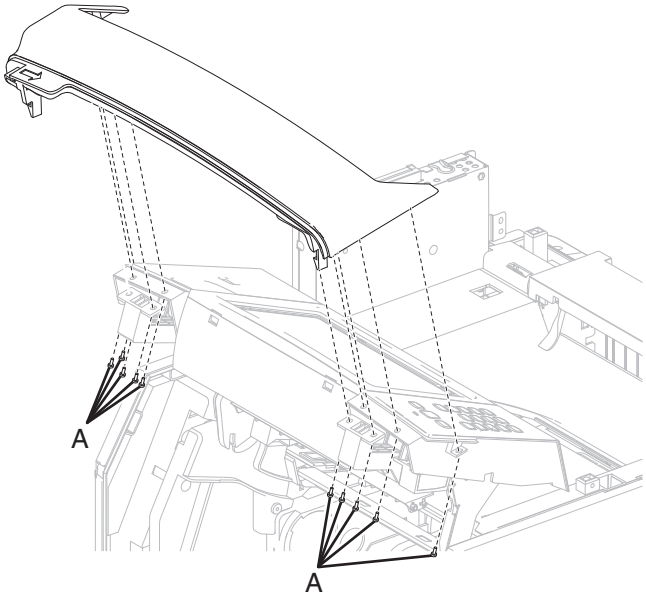

3 Remove the operator panel cover latch assembly.

Operator panel door assembly removal (models X651, X652, X654,X656)

Warning—Potential Damage: When replacing the operator panel assembly or the system card assembly, only replace one component at a time. Replace the required component and perform a POR before replacing another component. If this procedure is not followed, the printer will be rendered inoperable. Never replace two or more components without a POR after installing each one or the printer will be rendered inoperable. Never install and remove the components as a method of troubleshooting components. Once a component has been installed in a machine, it cannot be used in another machine. It must be returned to the manufacturer.

1 Remove the laser cover. Go to **"Laser cover removal (models X651, X652, X654, and X656)" on page 325**.

2 Remove the counter balance springs (A) on both sides.

3 Remove the print cartridge cover springs (B) on both sides.

4 Remove the E-clips (C) on both sides securing the links to the hinges, and remove the links.

5 Remove the pins (D) on both sides securing the links.

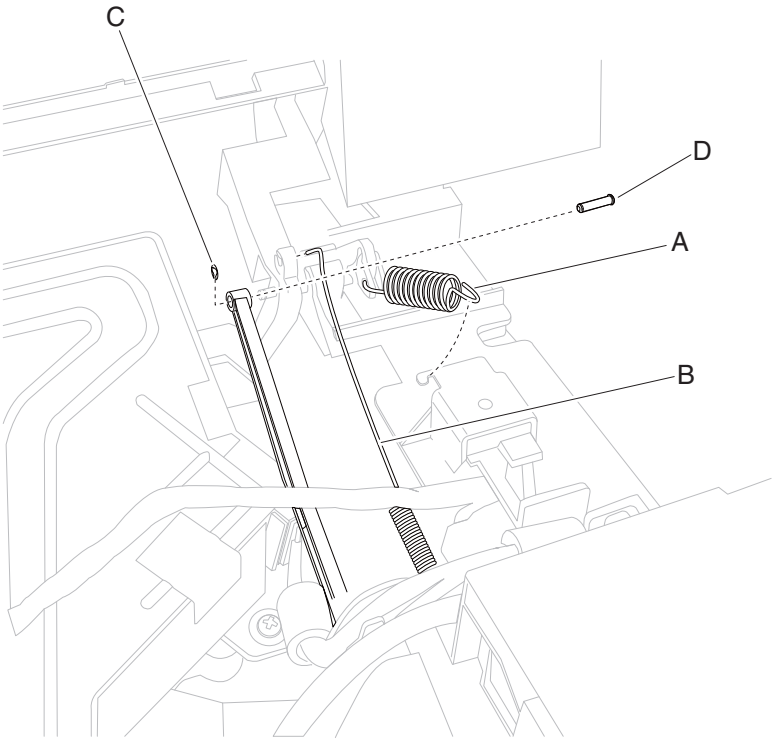

6 Remove the eight screws (E) securing the scanner controller cage cover to the cage. An X658 model is represented in the graphic below, however, the card cage cover removal procedure is similar for all models.

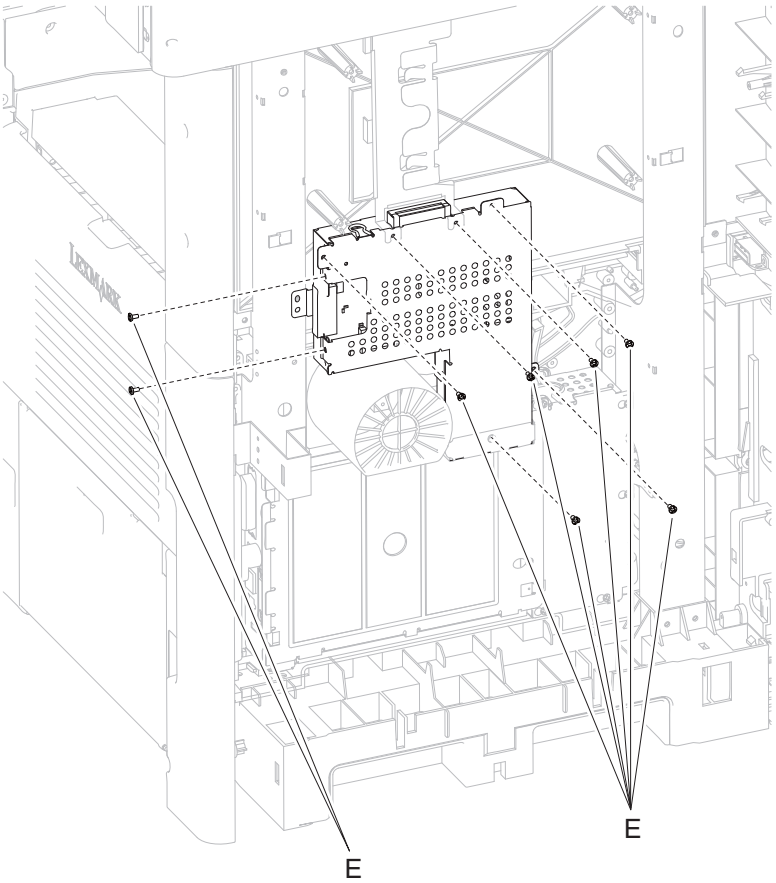

7 Remove the printer controller cage cover.

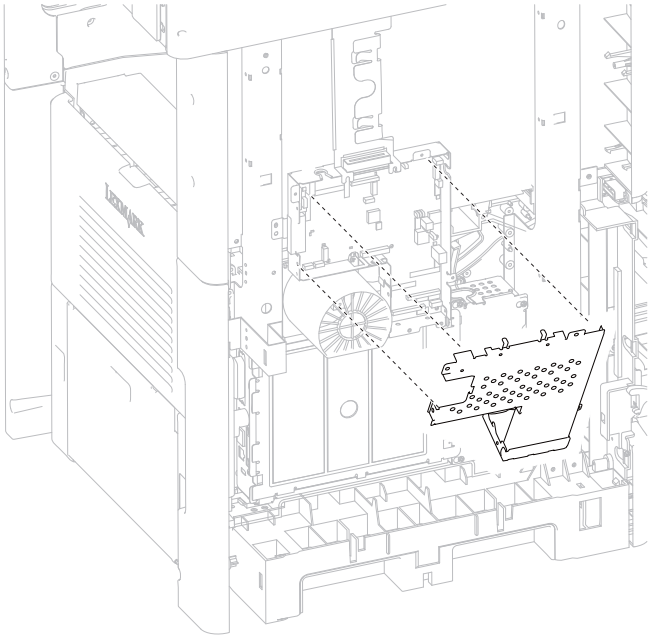

8 Disconnect the USB cable and the cover closed interlock switch harness.

9 Lift the operator panel door assembly out of the machine.

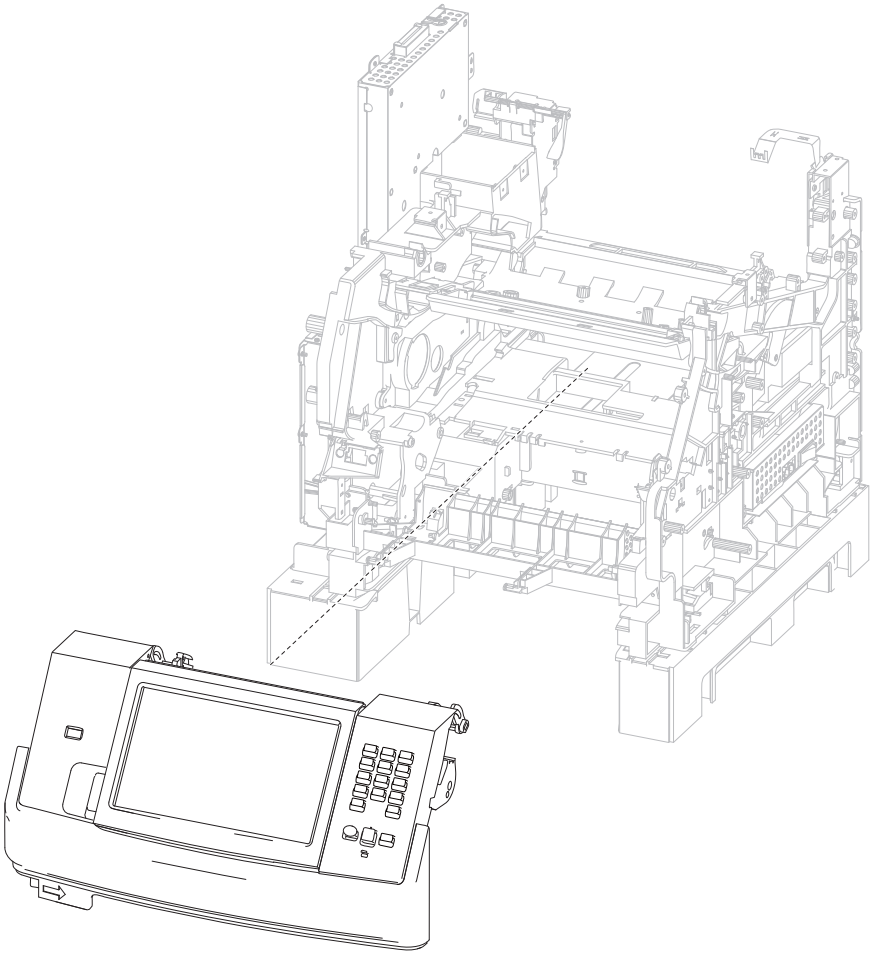

Operator panel assembly removal (model X658)

Warning—Potential Damage: When replacing the operator panel assembly or the system card assembly, only replace one component at a time. Replace the required component and perform a POR before replacing another component. If this procedure is not followed, the printer will be rendered inoperable. Never replace two or more components without a POR after installing each one or the printer will be rendered inoperable. Never install and remove the components as a method of troubleshooting components. Once a component has been installed in a machine, it cannot be used in another machine. It must be returned to the manufacturer.

1. Pull the operator panel door assembly forward, and remove.
2. Remove the two screws (A) securing the USB port to the operator panel door assembly.

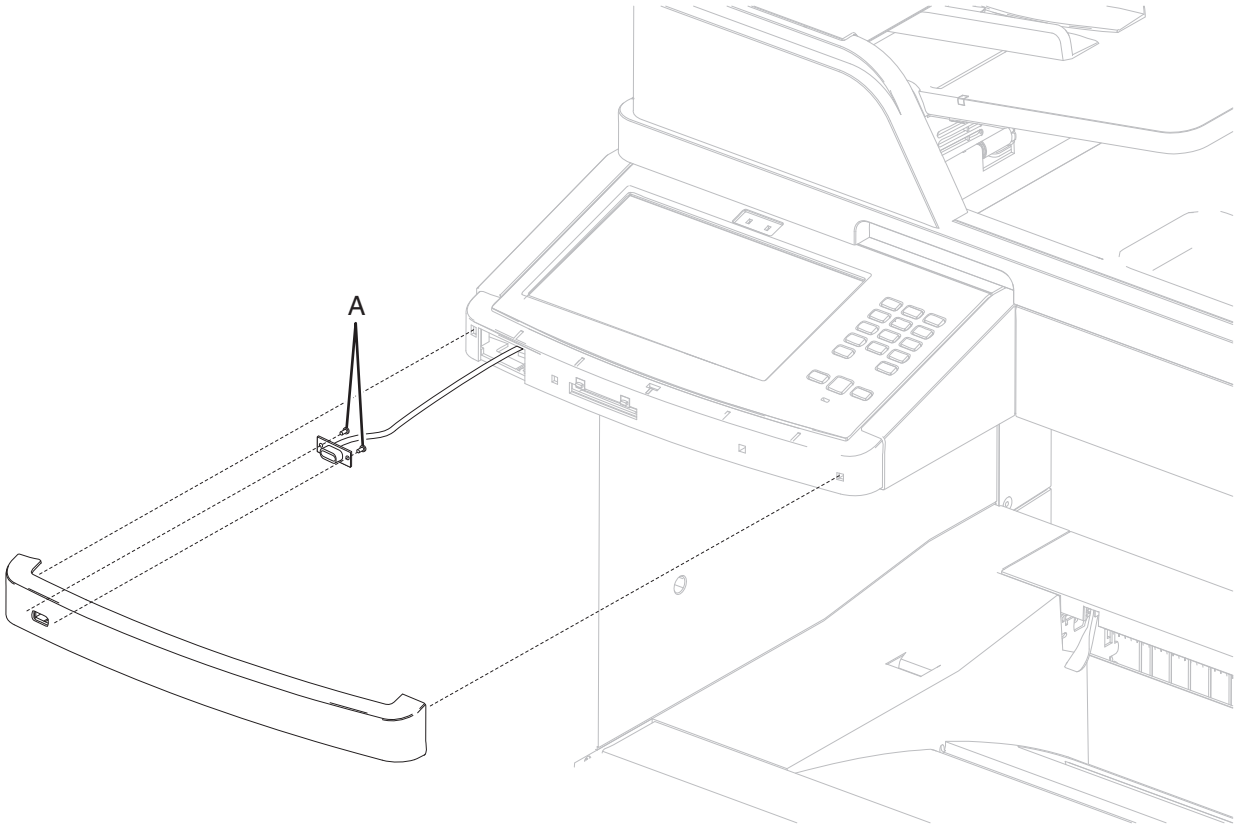

3 Remove the three screws (B) securing the operator panel assembly bottom to the scanner frame.

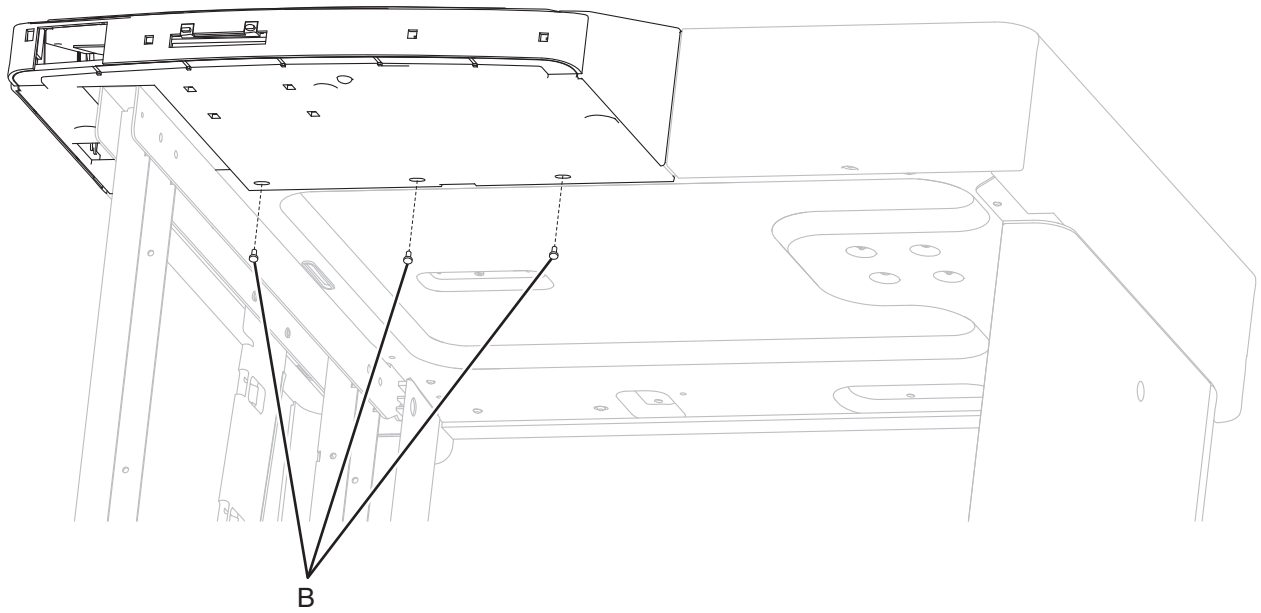

4 Remove the cover strip (C) from the operator panel assembly.

5 Remove the three screws (D) securing the operator panel assembly.

6 Slide the operator panel assembly to the left.

7 Rotate the operator panel assembly upside down, and remove the three screws (E).

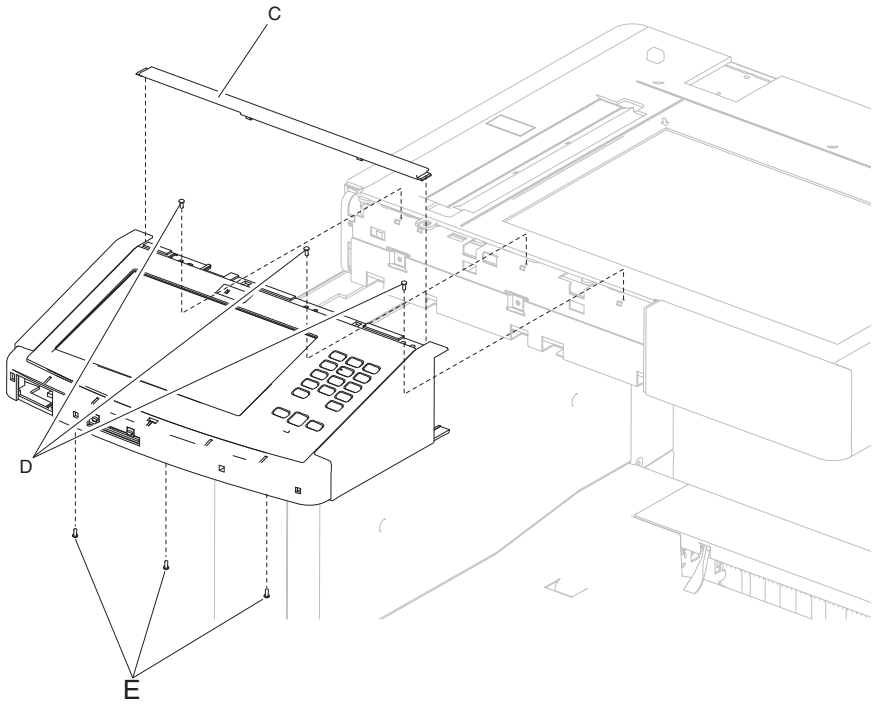

8 Separate the lower panel from the upper panel.

9 Disconnect the operator panel and cave light harnesses.

10 Remove the operator panel assembly.

Sensor shield assembly removal

1 Remove the inner deflector. Go to **“Inner deflector removal” on page 337**.

2 Gently unsnap the sensor shield assembly from the machine.

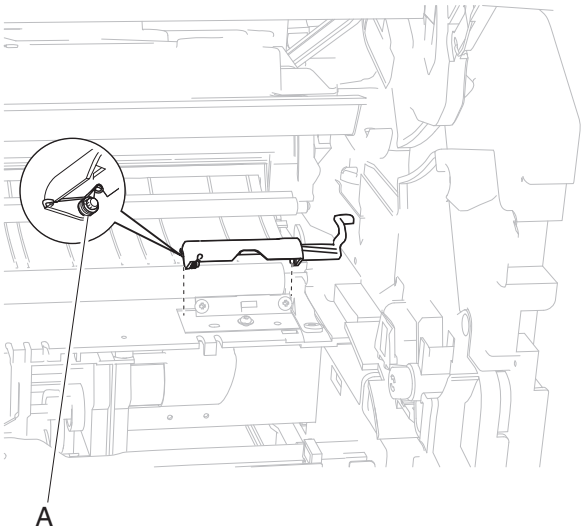

3 Remove the sensor shield assembly.

Installation warning: When replacing the sensor shield assembly, ensure that the spring (A) is properly aligned and the sensor shield assembly opens and closes properly.

Transfer roll assembly removal

1 Open the operator panel door assembly.

2 Remove the print cartridge.

3 Gently unsnap the transfer roll assembly from the machine.

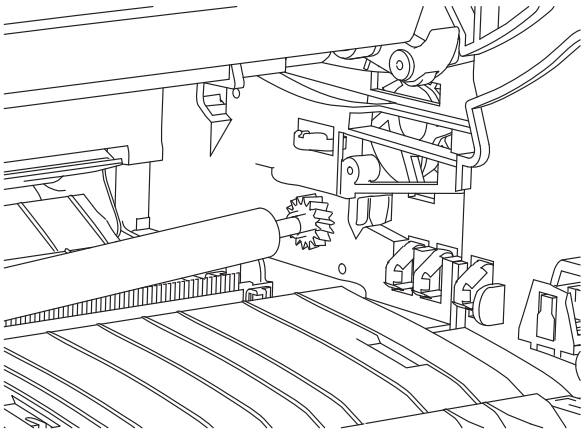

4 Remove the transfer roll assembly.

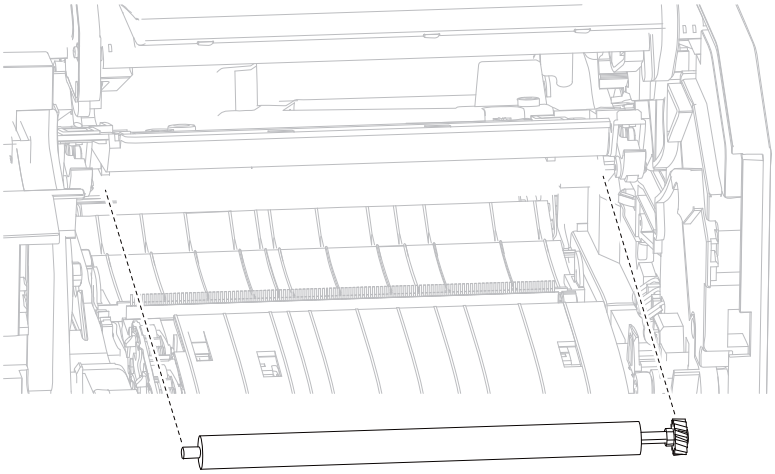

Installation warning: When replacing the transfer roll assembly, do not touch the foam surface.

Left transfer roll bracket assembly removal

1 Remove the transfer roll assembly. Go to **"Transfer roll assembly removal" on page 351**.

2 Remove the inner deflector. Go to **"Inner deflector removal" on page 337**.

3 Remove the screw (A) securing the transfer roll bracket assembly, left to the machine.

4 Remove the transfer roll bracket assembly, left.

5 Remove the roll clamp (B) from the transfer roll bracket assembly, left.

6 Remove the bushing (C).

7 Remove the spring (D).

8 Remove the screw (E).

9 Remove the ground wire (F).

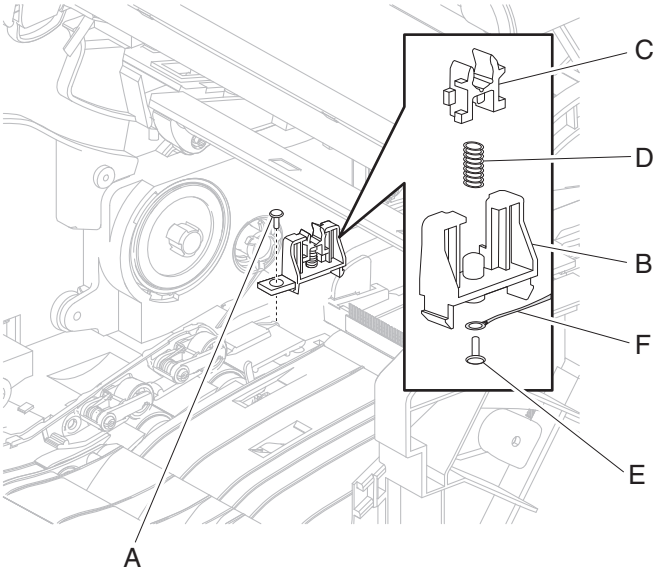

Installation warning: When reinstalling the transfer roll bracket assembly, left, ensure that the bushing (C), spring (D), and ground wire (F) are properly replaced.

Right transfer roll bracket assembly removal

1 Remove the transfer roll assembly. Go to **"Transfer roll assembly removal" on page 351**.

2 Remove the inner deflector. Go to **"Inner deflector removal" on page 337**.

3 Remove the screw (A) securing the transfer roll bracket assembly, right to the machine.

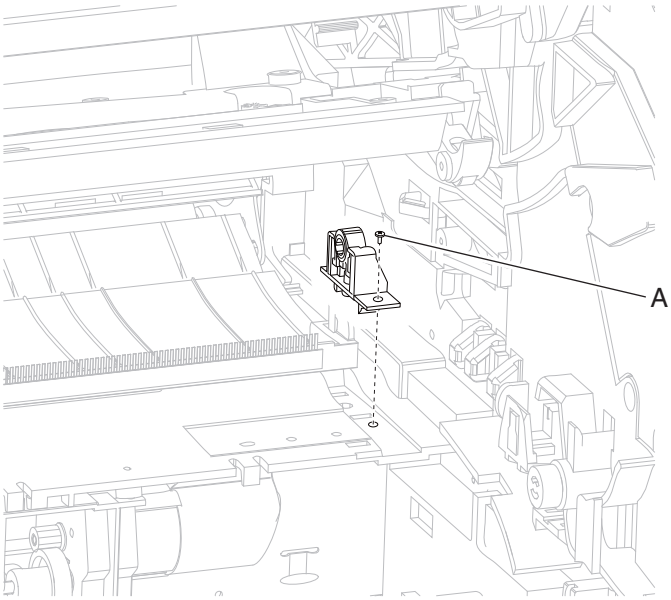

4 Remove the transfer roll bracket assembly, right.

Transfer deflector removal

1 Remove the transfer roll assembly. Go to **"Transfer roll assembly removal" on page 351**.

2 Gently unsnap the transfer deflector from the machine.

3 Remove the transfer deflector.

4 Remove the screw (A) securing the ground wire to the transfer deflector.

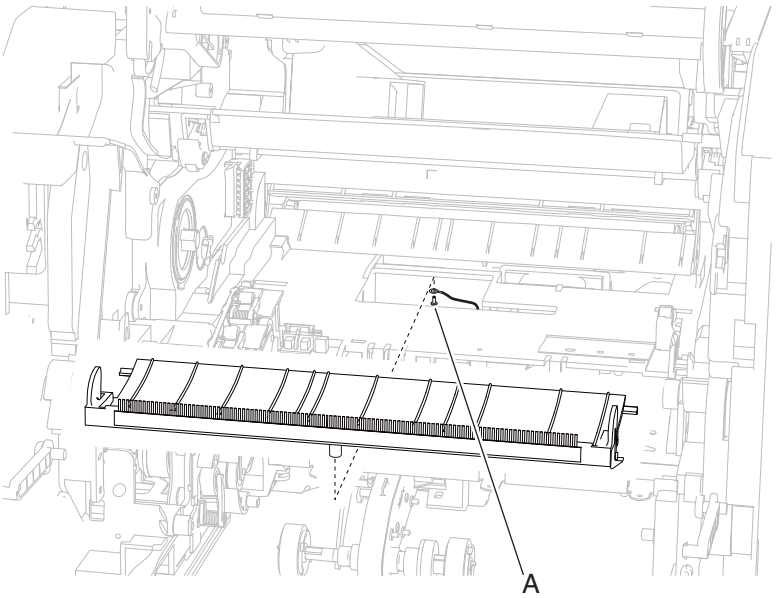

5 Remove the ground wire.

Installation warning: When replacing the transfer deflector, ensure that the ground wire is properly replaced.

Print cartridge cover assembly removal (model X658)

1 Open the print cartridge cover assembly.

2 Remove the two screws (A) securing the print cartridge cover assembly.

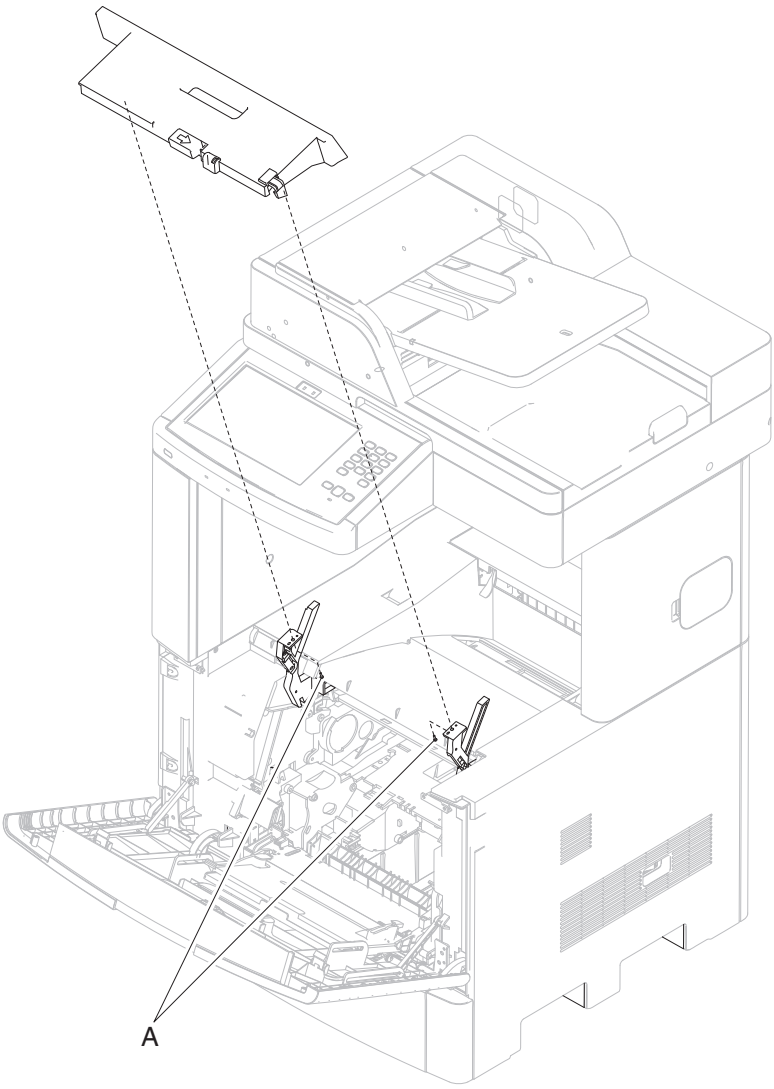

3 Remove the cartridge access door.

Bottom side removals

Duplex assembly removal

Note: When removing the duplex drive motor assembly, it does not need to be completely removed from the machine. It may be allowed to gently hang out of the way by the harness.

1 Remove the duplex drive motor assembly. Go to **"Duplex drive motor assembly removal" on page 370**.

2 Remove the pick arm assembly. Go to **"Pick arm assembly removal" on page 359**.

3 Remove the four screws (A) securing the duplex assembly to the machine.

4 Remove the harnesses (B) from the clamp.

5 Disconnect the connection (C) from the duplex assembly.

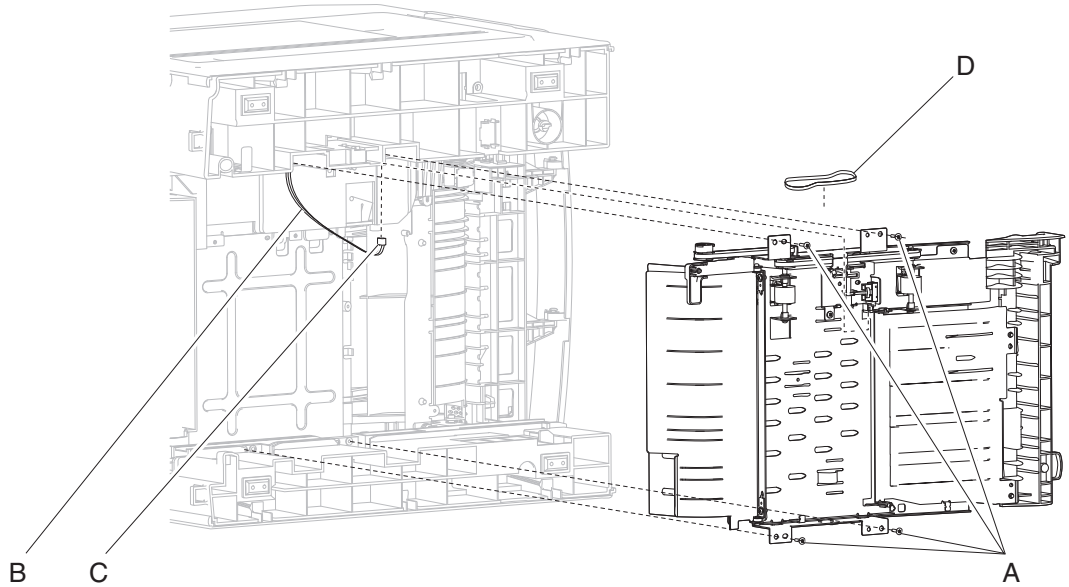

Note: When removing the duplex assembly, the lower duplex drive belt (D) will become detached.

6 Remove the duplex assembly.

Installation warning: When replacing the duplex assembly, ensure that the lower duplex drive belt (D) is properly reattached.

Duplex input sensor assembly removal

1 Remove the media tray.

2 Gently place the printer on its left or right side.

3 Disconnect the connection (A) from the duplex input sensor assembly.

4 Remove the two screws (B) securing the duplex input sensor assembly to the machine.

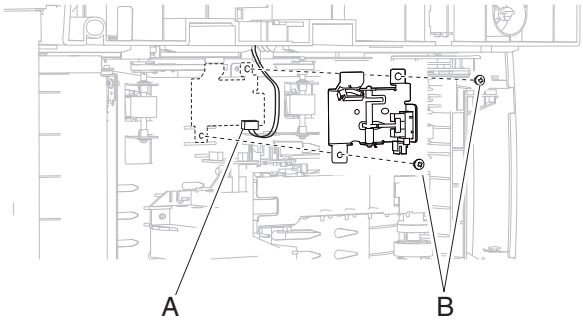

5 Remove the duplex input sensor assembly.

Front duplex guide assembly removal

1 Remove the media tray.

2 Gently place the printer on its left or right side.

3 Detach the front left duplex guide spring (A) from the front duplex guide assembly.

4 Detach the front right duplex guide spring (B) from the front duplex guide assembly.

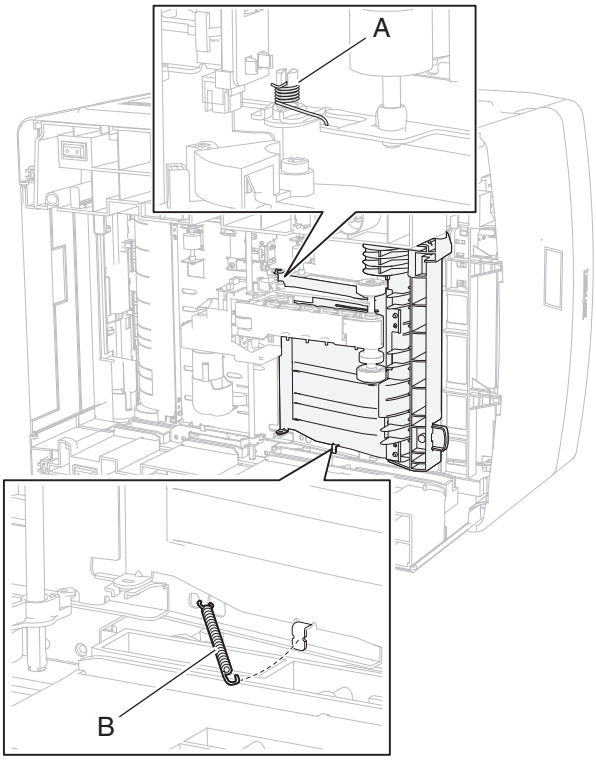

5 Fully open the front duplex guide assembly 90°, and detach it from the machine.

6 Remove the front duplex guide assembly.

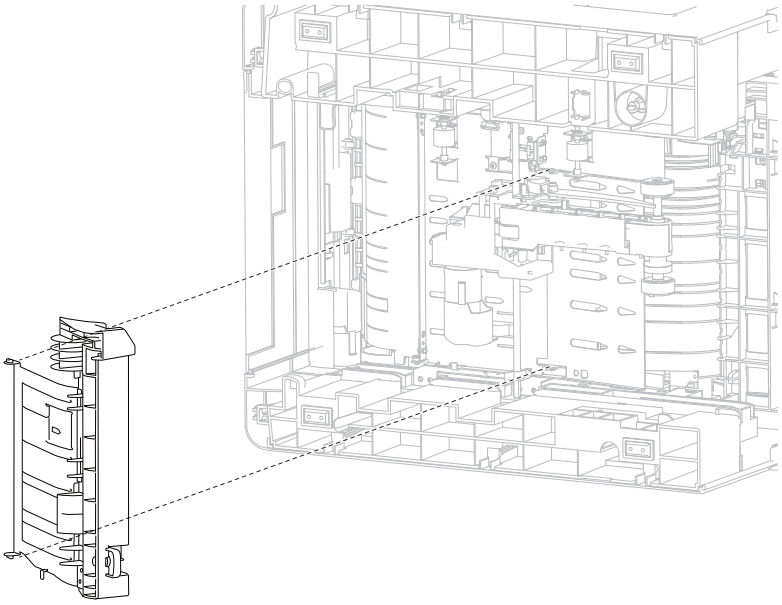

Media out actuator removal

1 Remove the pick arm assembly. Go to **"Pick arm assembly removal" on page 359**.

2 Release the hook (A) securing the media out actuator to the unit.

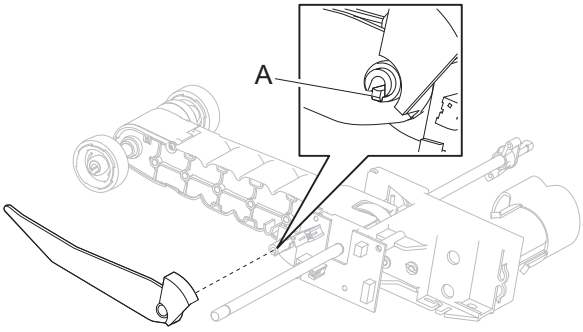

3 Remove the media out actuator.

Option drive shaft removal

1 Gently place the printer on its left or right side.

2 Using pliers, gently pull the option drive shaft from the machine.

3 Remove the spring.

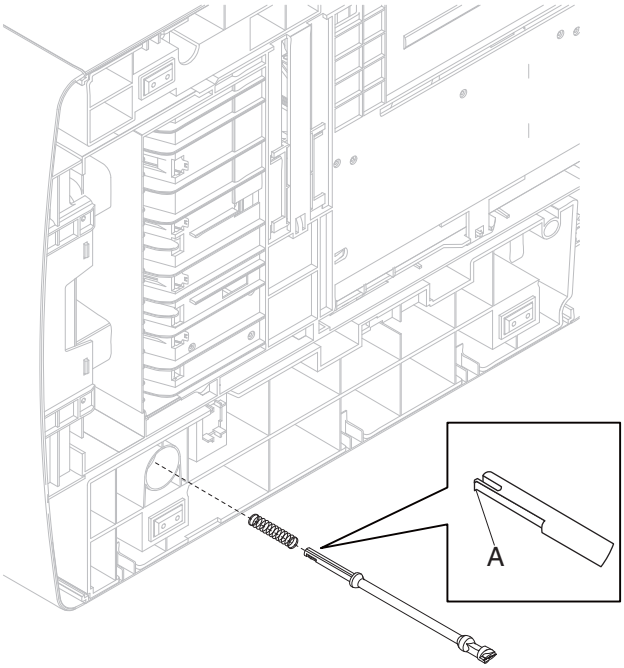

Installation warning: When replacing the option drive shaft, ensure that the plastic hook (A) is not damaged, or the option drive shaft will not remain secured.

Pick arm assembly removal

1 Remove the media tray from the machine.

2 Place the machine on the left or right side.

3 Remove the spring (A).

4 Remove the two E-clips (B) securing the pick arm assembly to the machine.

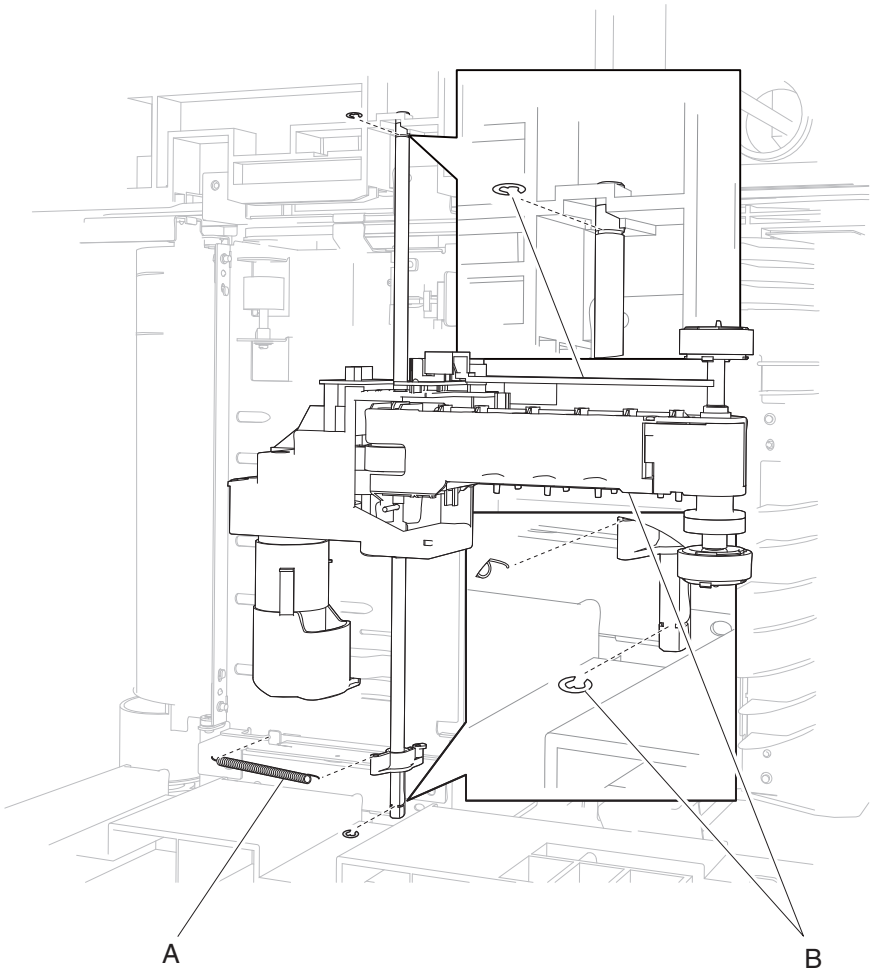

5 Remove the screw (C) securing the pick arm assembly to the machine.

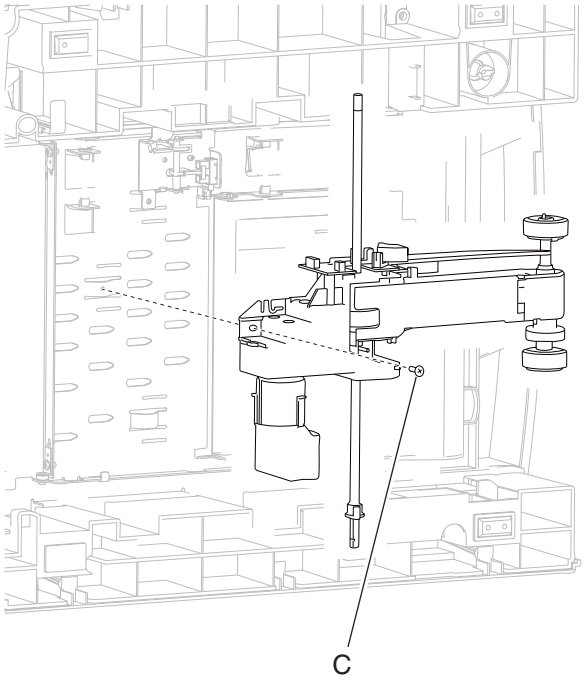

6 Remove the band (D) from the pick arm assembly.

7 Remove the cover from the pick arm assembly.

8 Remove the three connections (E) from the pick arm assembly.

9 Remove the wiring harness (F) from the pick arm assembly.

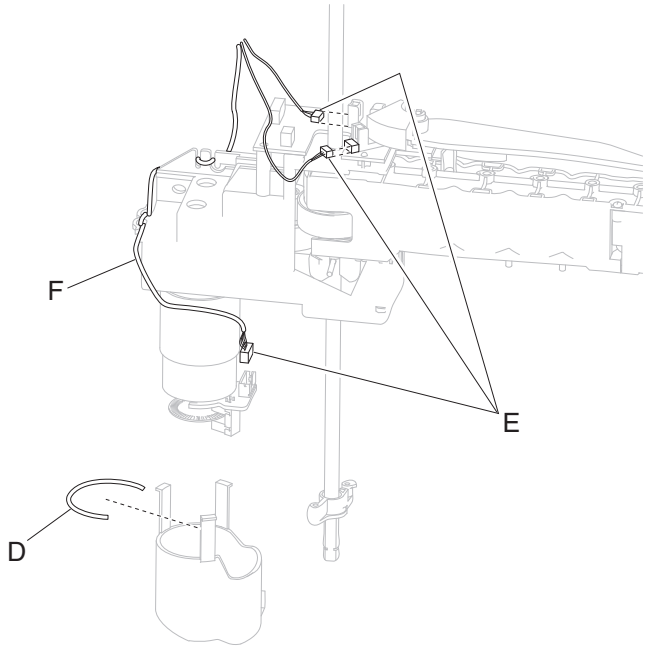

10 Remove the pick arm assembly.

Installation warning: When replacing the pick arm assembly, ensure that the harnesses are properly rerouted.

Installation warning: When replacing the pick arm assembly, ensure that the connections are properly replaced.

Pick roll assembly removal

1 Remove the media tray.

2 Gently pull the pick arm assembly down, and release the two hooks (A) securing the two pick roll assemblies.

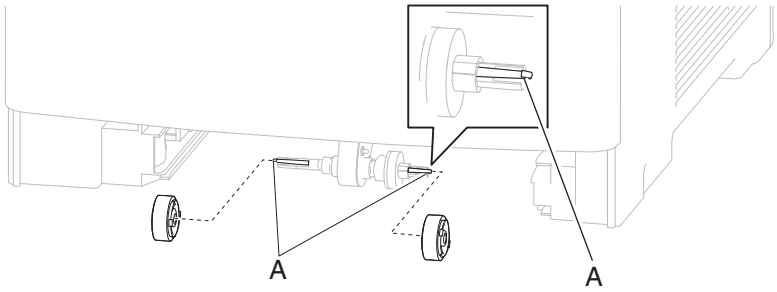

3 Remove the two pick roll assemblies.

Installation warning: When replacing the pick roll assembly, do not touch the rubber surface.

Sensor (media level) removal

1 Remove the pick arm assembly. Go to **“Pick arm assembly removal” on page 359**.

2 Release the hooks (A) securing the sensor (media level) to the assembly.

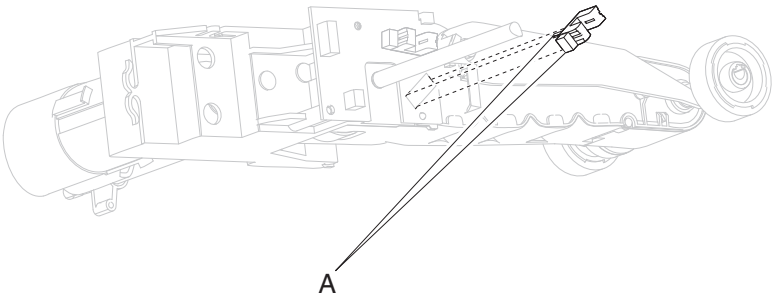

3 Remove the sensor (media level).

Sensor (media out) removal

1 Remove the pick arm assembly. Go to **“Pick arm assembly removal” on page 359**.

2 Release the hooks (A) securing the sensor (media out) to the assembly.

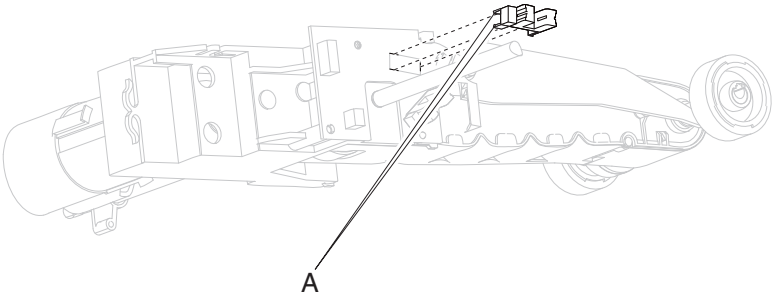

3 Remove the sensor (media out).

Rear side removals

Rear connection access cover removal

1 Gently detach the two hinges (A) of the connection access cover, rear from the machine.

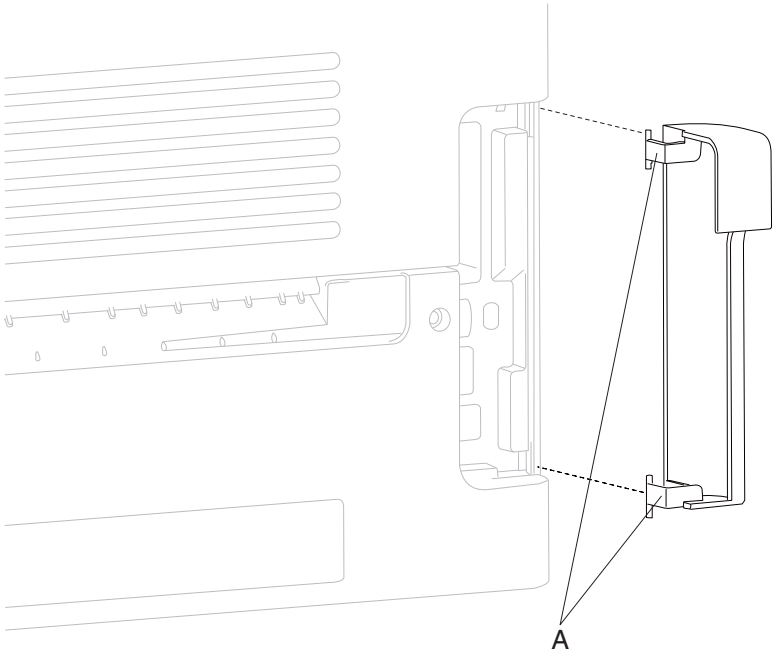

2 Remove the connection access cover, rear.

Rear lower cover removal

1 Remove the rear door assembly. Go to **"Rear door assembly removal" on page 368**.

2 Remove the two screws (A) on each side of the cover.

3 Open the rear lower cover.

4 Remove the remaining two screws (B).

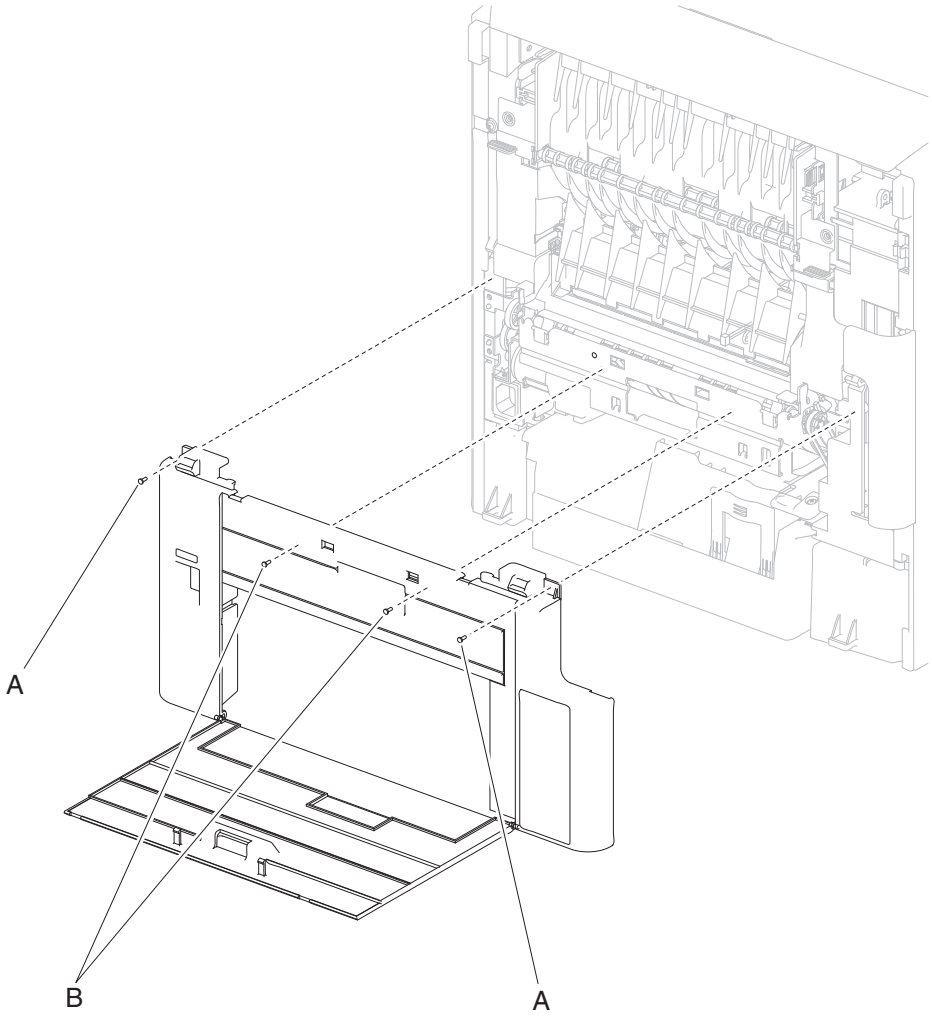

5 Lift and remove the rear lower cover.

Left rear corner cover removal (model X658)

1 Remove the scanner support left rear cover. Go to **"Scanner support left rear cover removal (model X658)" on page 513**.

2 Remove the two screws (A) securing the left rear corner cover to the machine.

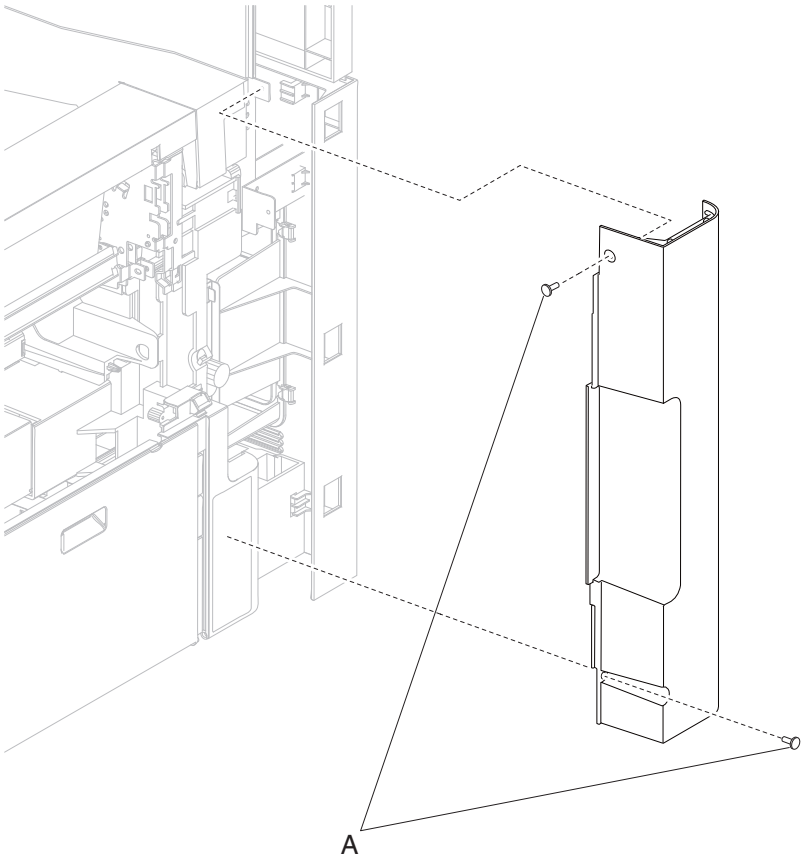

3 Slide the left rear corner cover up and out.

Right rear corner cover removal (model X658)

1 Remove the scanner support right side cover. Go to **"Scanner support right rear cover removal (model X658)" on page 510**.

2 Open the rear door.

3 Remove the two screws (A) securing the left rear corner cover.

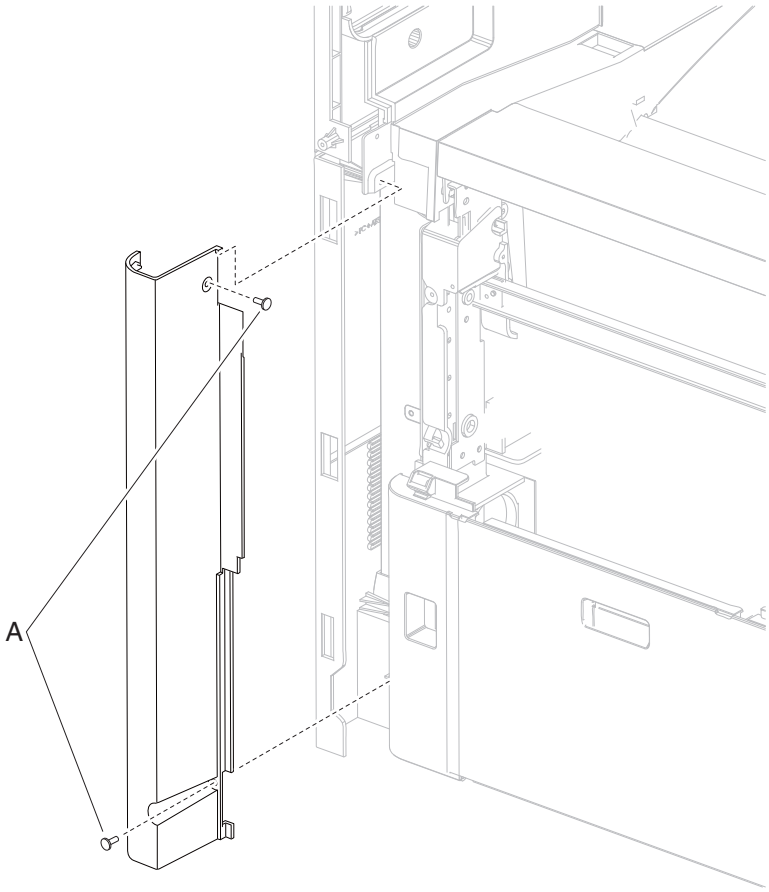

4 Lift and remove the right rear corner cover.

Rear lower cover assembly removal (models X654, X656, X658)

1 Open the rear lower door.

2 Remove the four screws (A) securing the rear lower cover assembly to the machine.

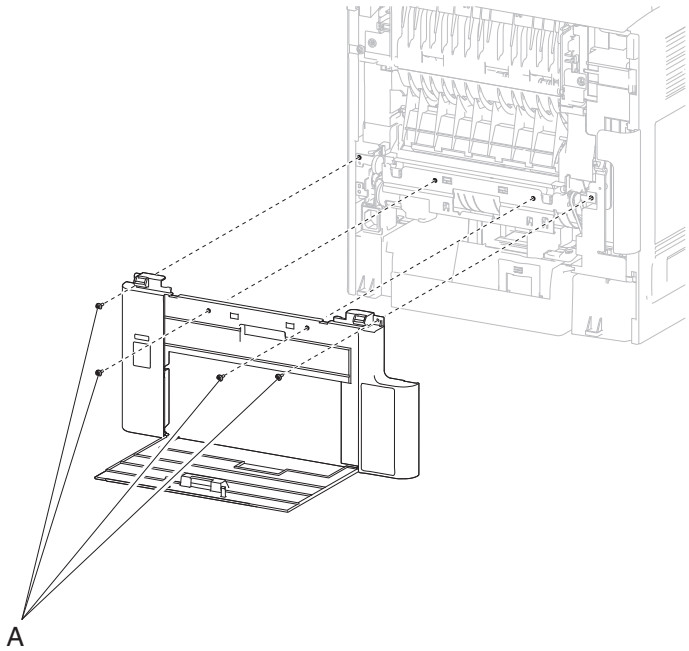

3 Remove the rear lower cover assembly.

Rear door assembly removal

1 Pull the door assembly, rear away from the machine.

2 Twist the door strap left or right until vertical, and pull the strap out of the slot.

3 Position the door assembly, rear at a 45° angle as shown in the picture.

4 Remove the door assembly, rear.

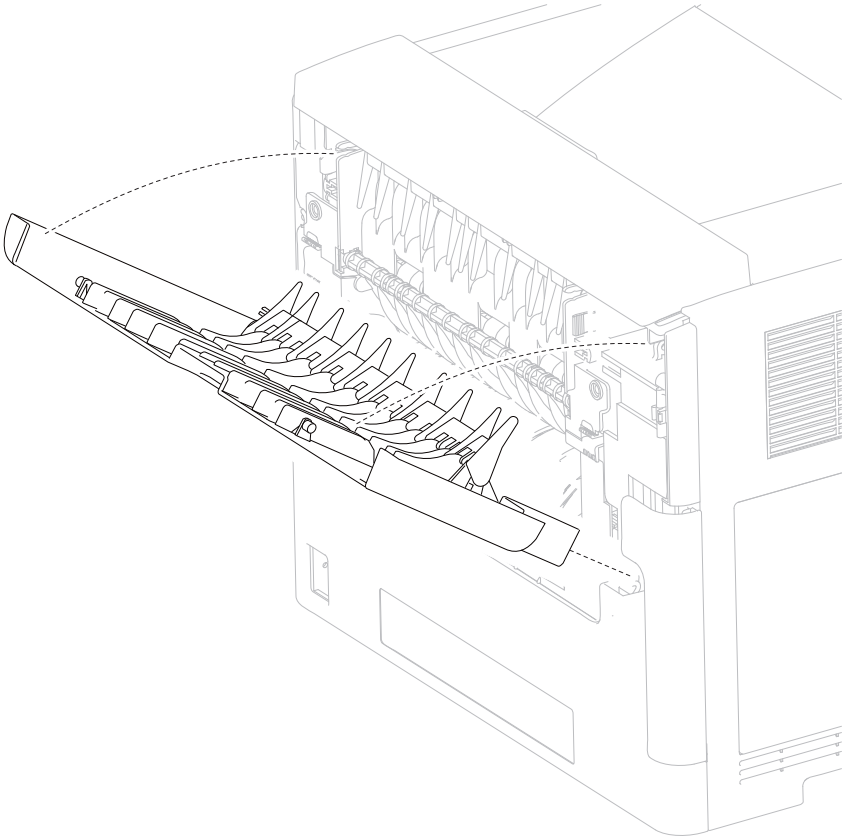

Rear duplex guide assembly removal

1 Remove the rear lower cover assembly. Go to **"Rear lower cover assembly removal (models X654, X656, X658)" on page 368**.

2 Remove the media tray.

3 Gently place the printer on its left or right side.

4 Remove the two screws (A) securing the two retainers (B) to the machine.

5 Remove the two retainers (B).

6 Detach the rear duplex guide spring (C).

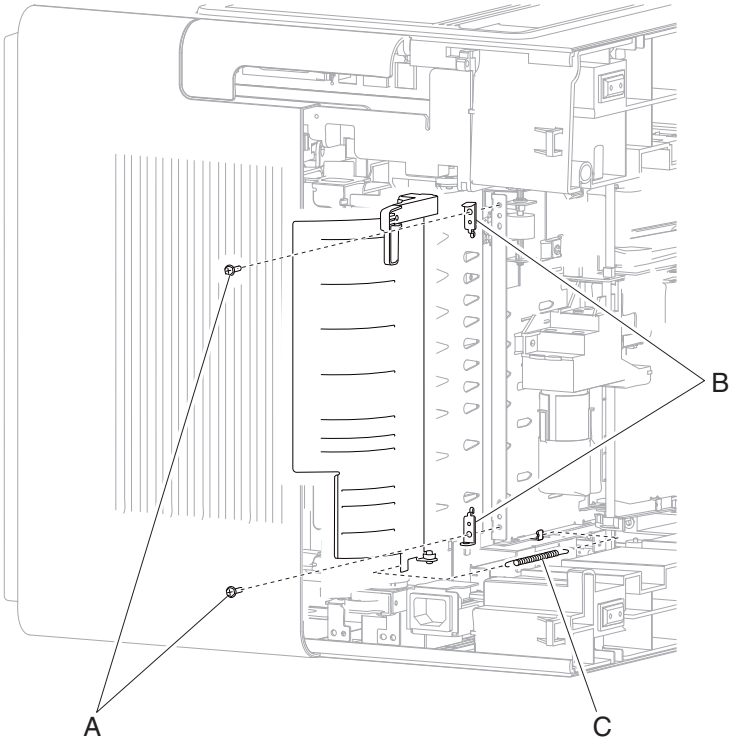

7 Remove the rear duplex guide assembly.

8 Remove the screw (D) securing the rear duplex guide handle to the assembly.

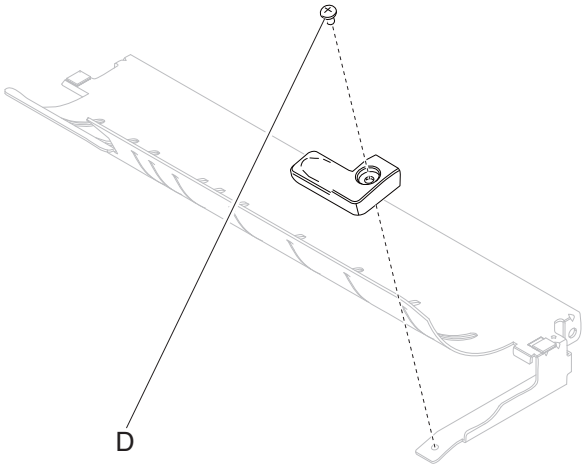

9 Remove the rear duplex guide assembly.

Duplex drive motor assembly removal

1 Remove the fuser access door. Go to **"Fuser access door assembly removal" on page 372**.

2 Remove the rear lower cover assembly. Go to **"Rear lower cover assembly removal (models X654, X656, X658)" on page 368**.

3 Remove the three screws (A) securing the duplex drive motor assembly to the machine.

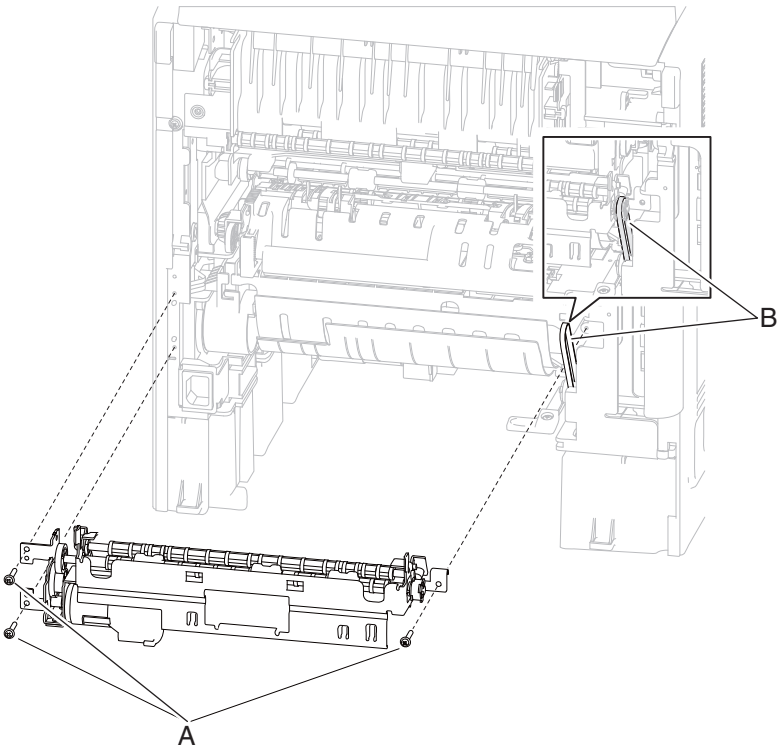

Note: When removing the duplex drive motor assembly, the upper duplex drive belt (B) will become detached.

4 Remove the band (C) from the duplex drive motor assembly.

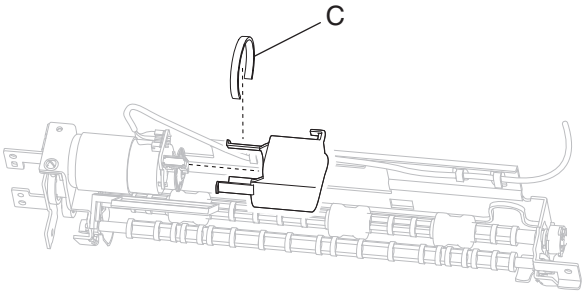

5 Remove the cover from the duplex drive motor assembly.

6 Disconnect the connection (D) to the duplex drive motor assembly.

7 Remove the harness (E) from the duplex drive motor assembly.

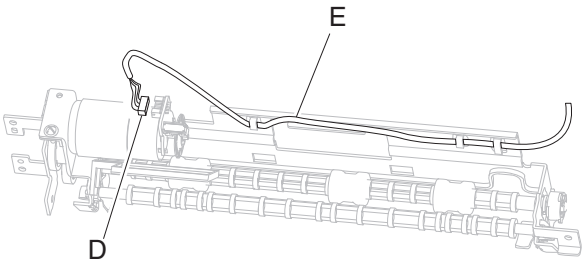

Installation warning: When replacing the duplex drive motor assembly, ensure that all harnesses are properly re-routed.

Installation note: Ensure that the belt is replaced properly.

Fuser access door assembly removal

1 Remove the door assembly, rear. Go to **"Rear door assembly removal" on page 368**.

2 Press the two tabs (A) on the fuser access door assembly, and detach it from the machine.

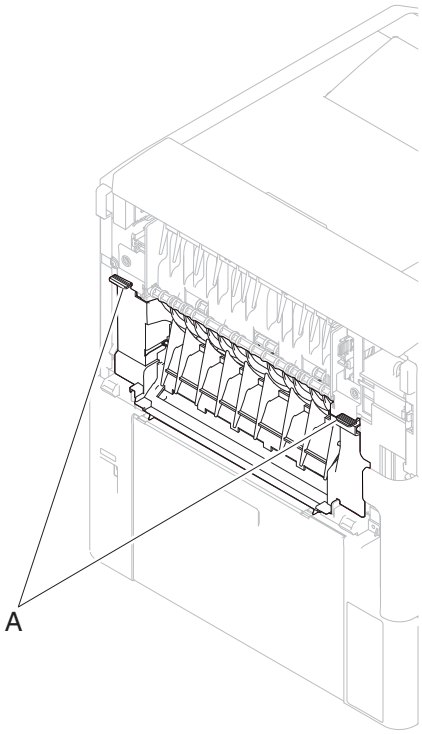

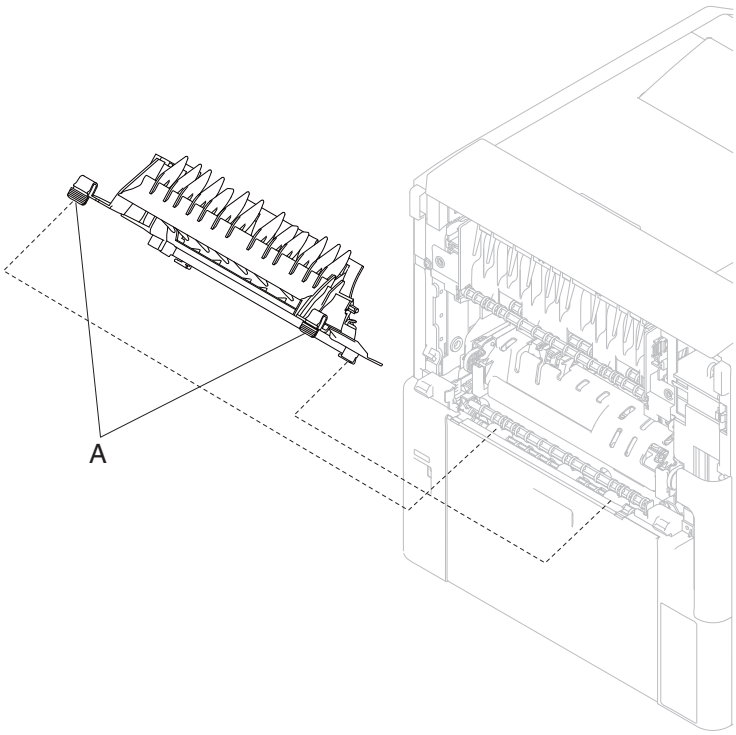

3 Swing the fuser access door assembly away from the machine.

4 Unsnap the fuser access door assembly from the machine.

5 Remove the fuser access door assembly.

Fuser unit assembly removal

1 Remove the fuser wiper cover assembly. Go to **“Fuser wiper cover assembly removal” on page 375**.

2 Remove the door assembly, rear. Go to **“Rear door assembly removal” on page 368**.

3 Open the fuser access door.

4 Press the two buttons (A) on the fuser unit assembly to release it from the machine.

5 While pressing the two buttons (A), pull the fuser unit assembly from the machine.

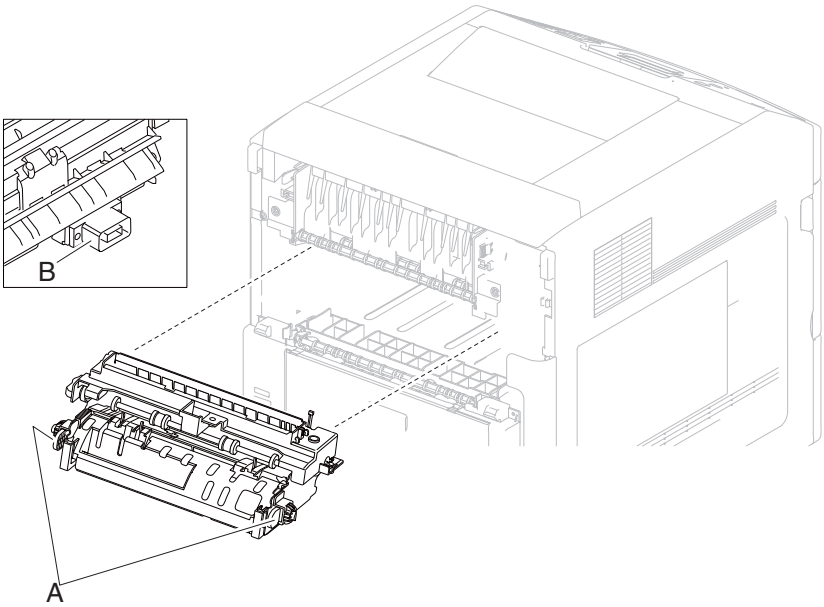

Installation warning: When replacing the fuser unit assembly, ensure that the electrical connection (B) and the two buttons (A) are properly secured.

Redrive assembly removal

1 Remove the rear door assembly. Go to **"Rear door assembly removal" on page 368**.

2 Open the fuser access door.

3 Remove the two screws (A) securing the redrive assembly to the machine.

4 Press the two tabs (B) to release the redrive assembly to the machine.

5 While pressing the two tabs (B), pull the redrive assembly from the machine.

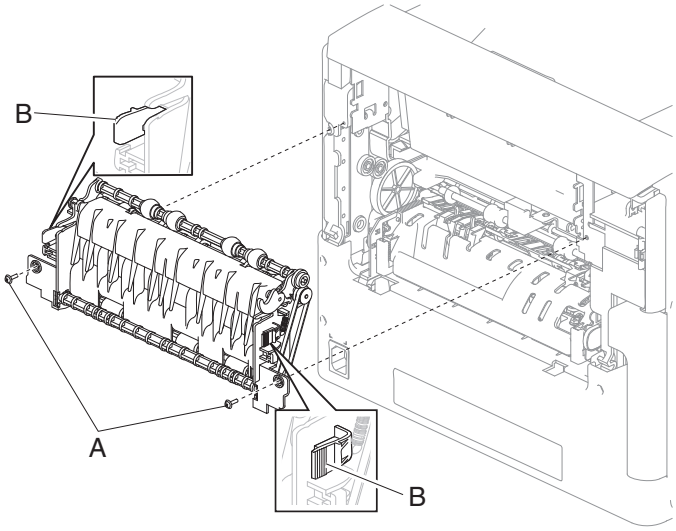

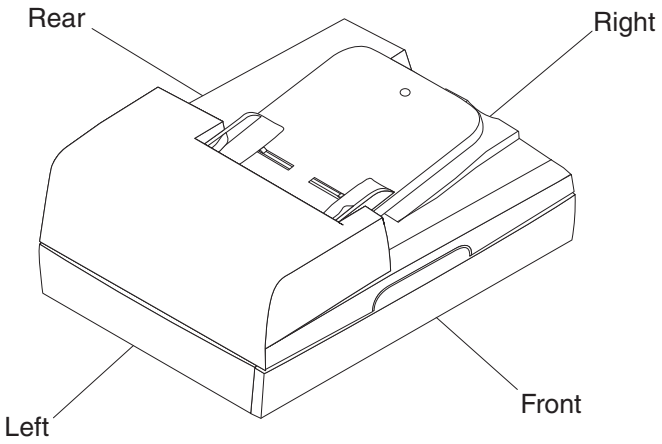

Top side removals

Fuser wiper cover assembly removal

1 Press the button (A) securing the fuser wiper cover assembly to the machine.

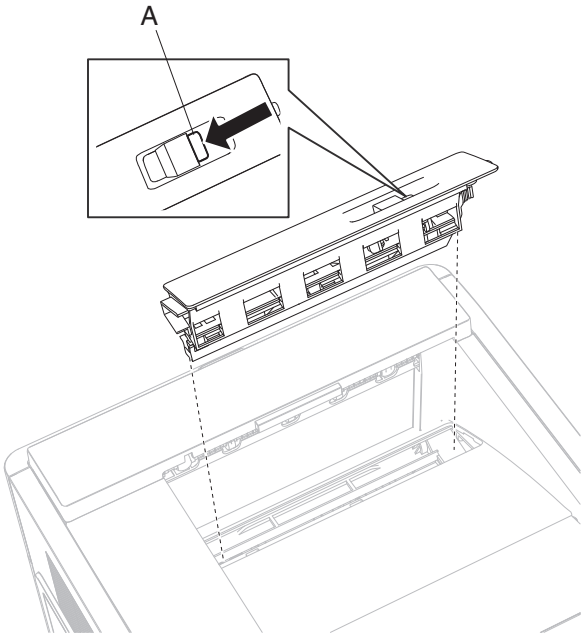

2 Remove the fuser wiper cover assembly.

Media support removal

1 Gently detach the two bosses (A) of the media support from the machine.

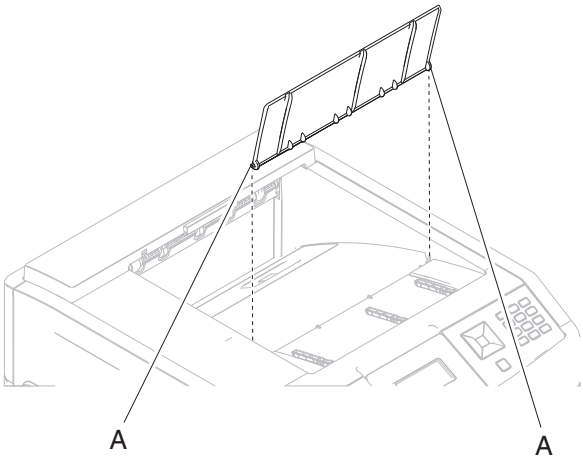

2 Remove the media support.

Output cover assembly removal (models X651, X652, X654, X656)

1 Open the rear door assembly.

Note: If you do not have a short screwdriver, remove the scanner unit assembly. Go to **"Scanner unit assembly removal (models X651, X652, X654, and X656)" on page 531**.

2 Remove the three screws (A) securing the output cover assembly to the machine.

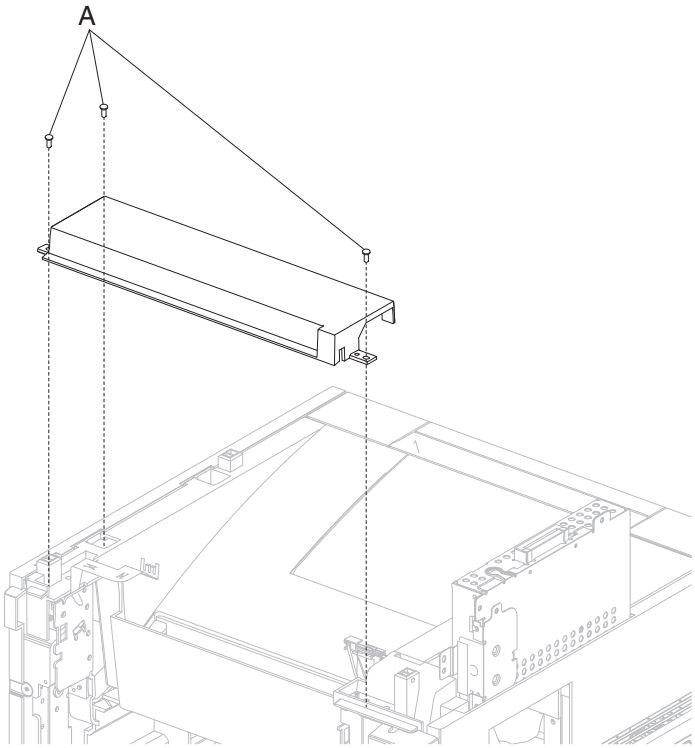

3 Remove the output cover assembly.

Output cover assembly removal (model X658)

1 Open the rear door assembly.

2 Lift the right side of the fuser exit access panel and remove.

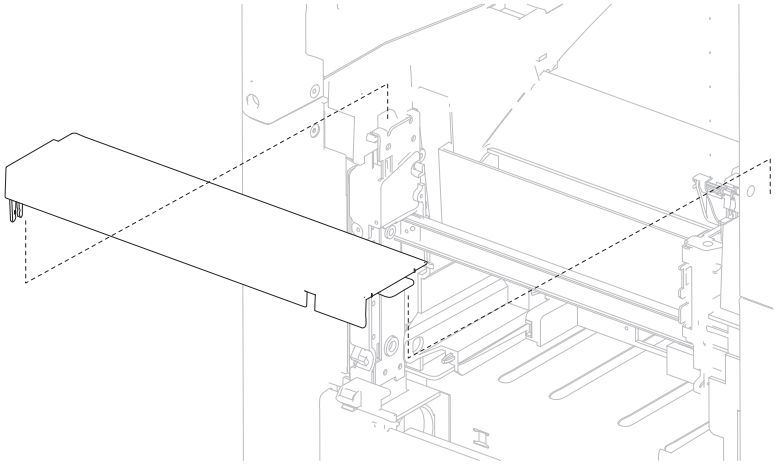

Printhead assembly removal

Warning—Potential Damage: When replacing the printhead assembly, ensure that the printhead skew is properly adjusted, or print quality issues will occur. Go to **"Alignment assembly adjustment" on page 305**.

1 Remove the laser cover. Go to **"Laser cover removal (models X651, X652, X654, and X656)" on page 325** or **"Laser cover removal (model X658)" on page 327**.

2 Remove the six screws (A) securing the metal cover to the machine.

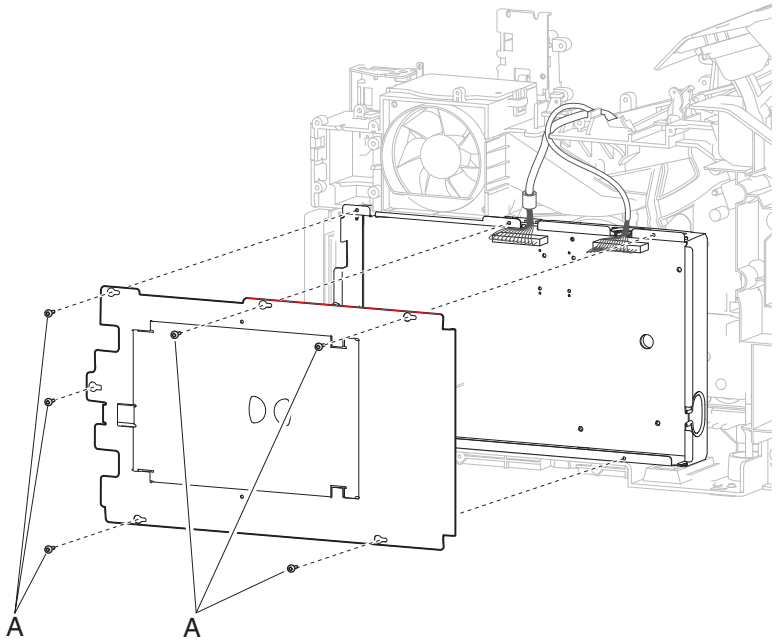

3 Remove the metal cover.

4 Disconnect the connections (B) from the printhead assembly.

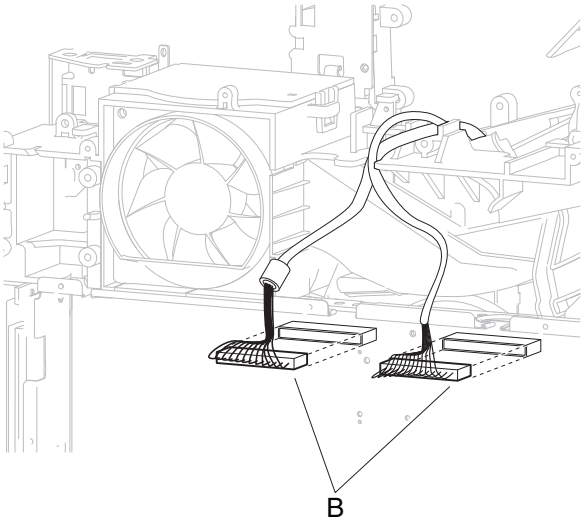

5 Remove the four screws (C) securing the printhead assembly to the machine.

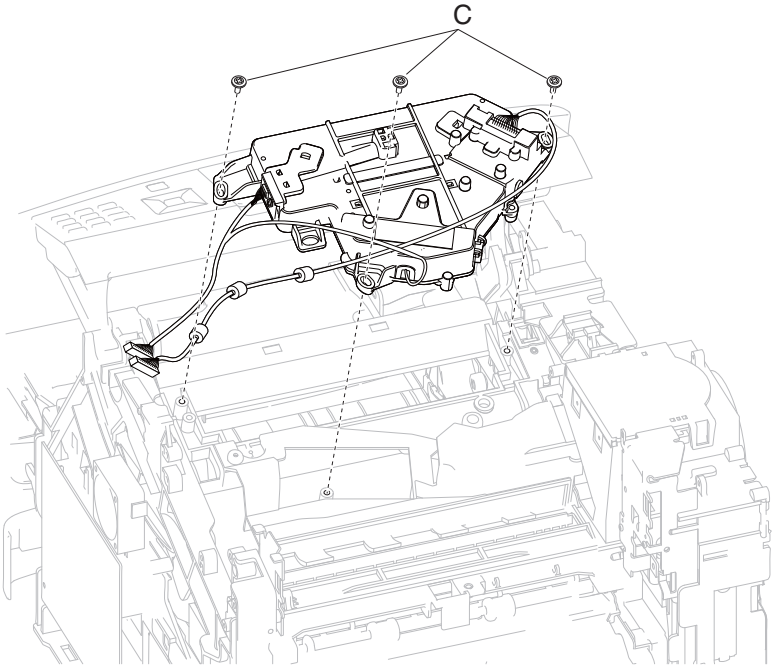

6 Remove the printhead assembly.

Installation warning: When replacing the printhead assembly, ensure that the printhead skew is properly adjusted, or print quality issues will occur. Go to **“Alignment assembly adjustment” on page 305**.

MPF cam gear removal

1 Remove the alignment assembly. Go to **“Alignment assembly removal” on page 309**.

2 Release the hook (A) securing the gear to the unit.

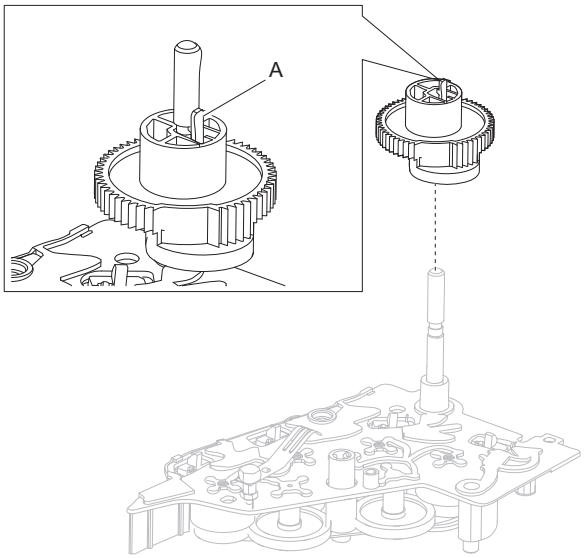

3 Remove the MPF cam gear.

Redrive motor assembly removal

1 Remove the laser cover. Go to **“Laser cover removal (models X651, X652, X654, and X656)” on page 325** or **“Laser cover removal (model X658)” on page 327**.

2 Remove the six screws (A) securing the metal cover to the machine.

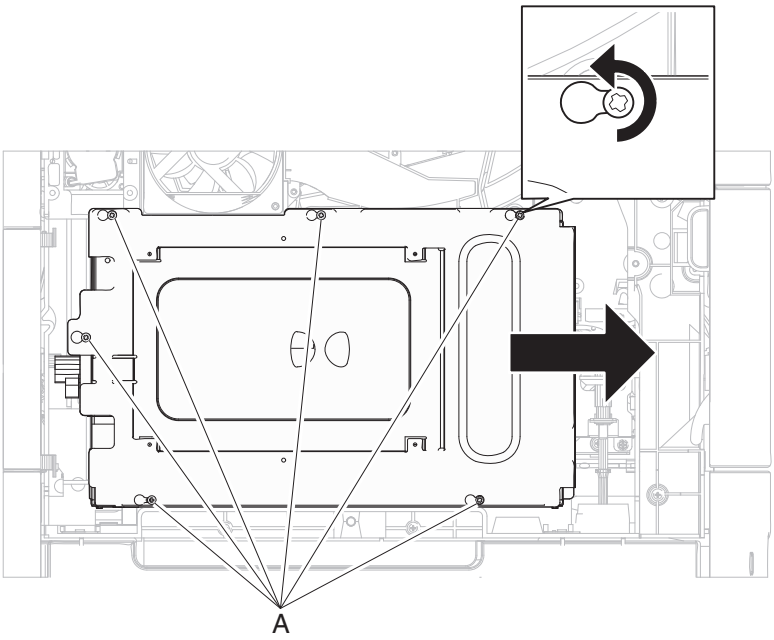

3 Remove the metal cover.

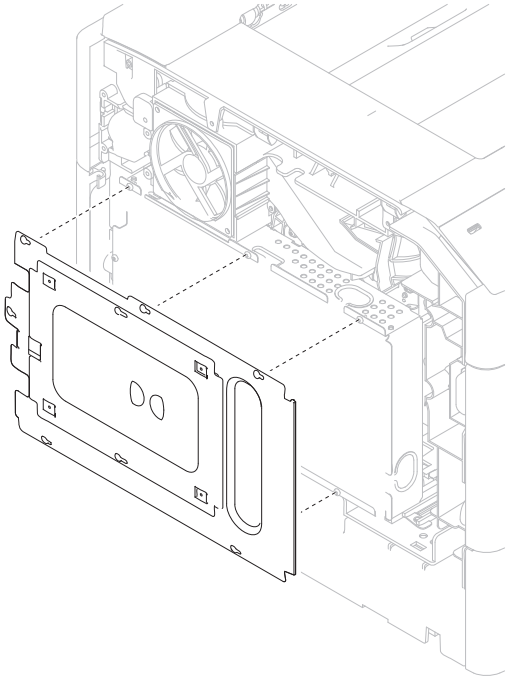

4 Disconnect the connection (B) from the redrive motor assembly.

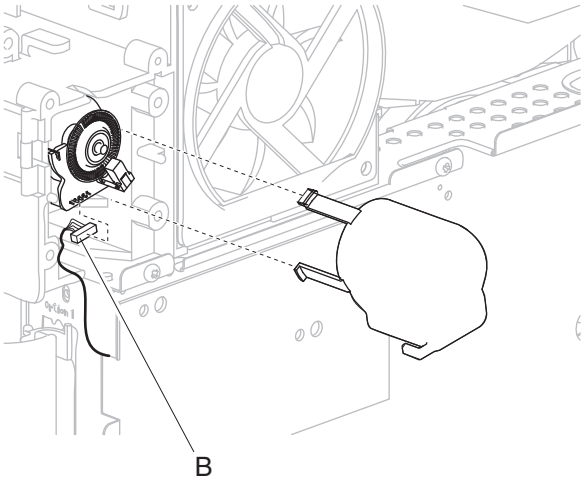

5 Disconnect the connection (C) from the sensor (standard media bin full).

6 Release the hooks (D) securing the output option interface cable assembly to the machine.

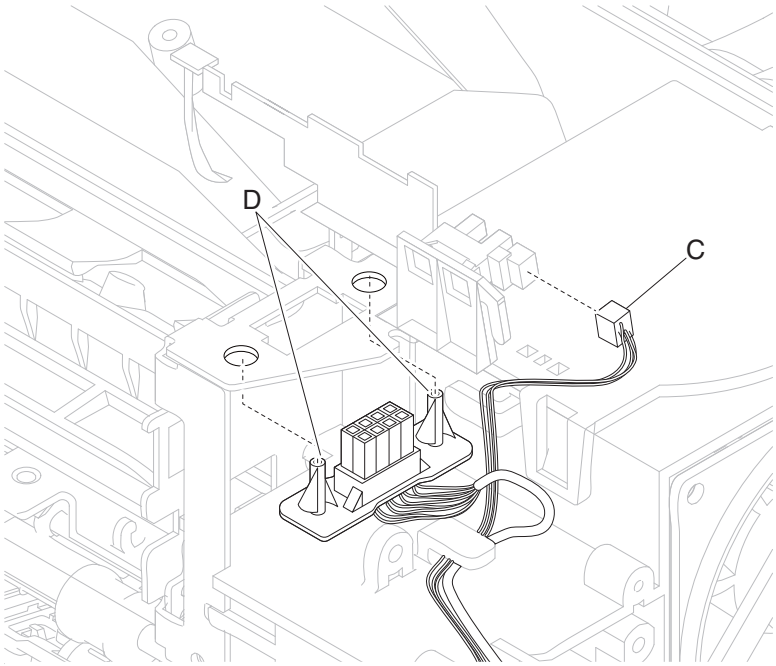

7 Detach the output option cable assembly.

8 Remove the two screws (E) securing the redrive motor assembly to the machine.

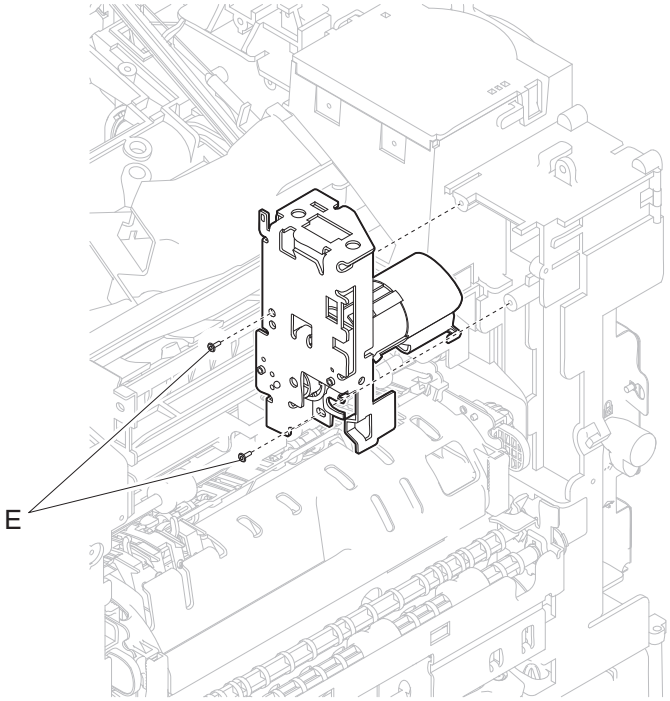

9 Remove the redrive motor assembly.

Sensor (duplex input) removal

1 Remove the duplex input sensor assembly. Go to **“Duplex input sensor assembly removal” on page 356**.

2 Release the hooks (A) securing the senor (duplex media path) to the bracket.

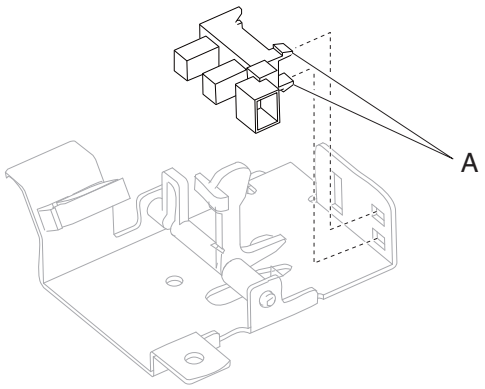

3 Remove the sensor (duplex input).

Sensor (standard bin exit) removal

1 Remove standard bin actuator assembly.

2 Release the hooks (A) securing the sensor (standard bin exit) to the assembly.

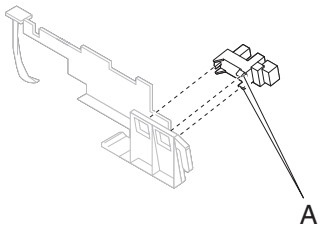

3 Remove the sensor (standard bin exit).

Sensor (toner density) removal

1 Remove the sensor shield assembly. Go to **“Sensor shield assembly removal ” on page 351**.

2 Remove the two screws (A) securing the sensor (toner density) to the machine.

3 Remove the sensor (toner density).

4 Disconnect the connection (B) to the sensor (toner density).

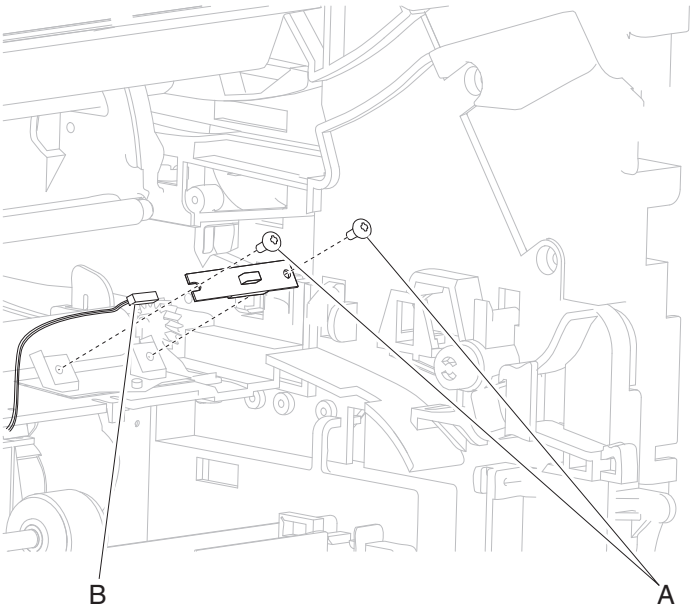

Standard bin actuator assembly removal

1 Remove the laser cover. Go to **"Laser cover removal (models X651, X652, X654, and X656)" on page 325** or **"Laser cover removal (model X658)" on page 327**.

2 Disconnect the connection (A) from the standard bin actuator assembly.

3 Press the tab (B) to release the standard bin actuator assembly from the machine.

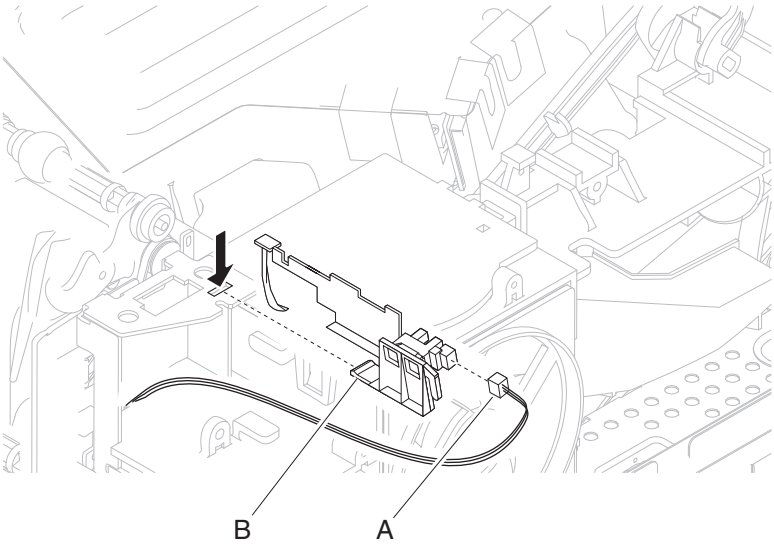

4 Remove the standard bin actuator assembly.

Sensor (standard exit bin) actuator assembly removal

1 Open the upper rear door.

2 Remove the fuser access panel.

3 Remove the redrive assembly. Go to **“Redrive assembly removal” on page 374**.

4 Using a flat-blade screwdriver, press on the tab (A) securing the sensor (standard exit bin) actuator assembly.

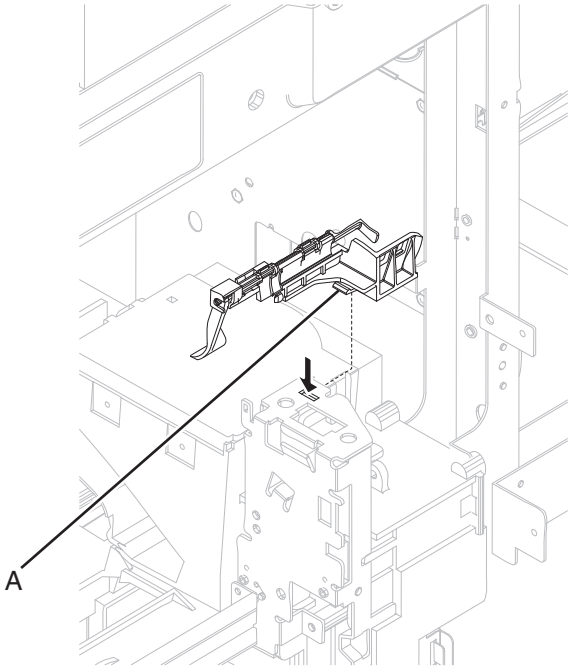

5 Position the sensor (standard exit bin) actuator assembly where the laser can be removed.

6 Remove the laser cover. Go to **“Laser cover removal (model X658)” on page 327**.

7 Remove the sensor (standard exit bin) actuator assembly.

Tray roller catch assembly removal

Note: Carefully remove the base machine from the input option tray assembly before proceeding.

1 Remove the media tray catch spring. Go to **"Media tray catch spring removal" on page 466**.

2 Remove the tray roller catch assembly from the drawer.

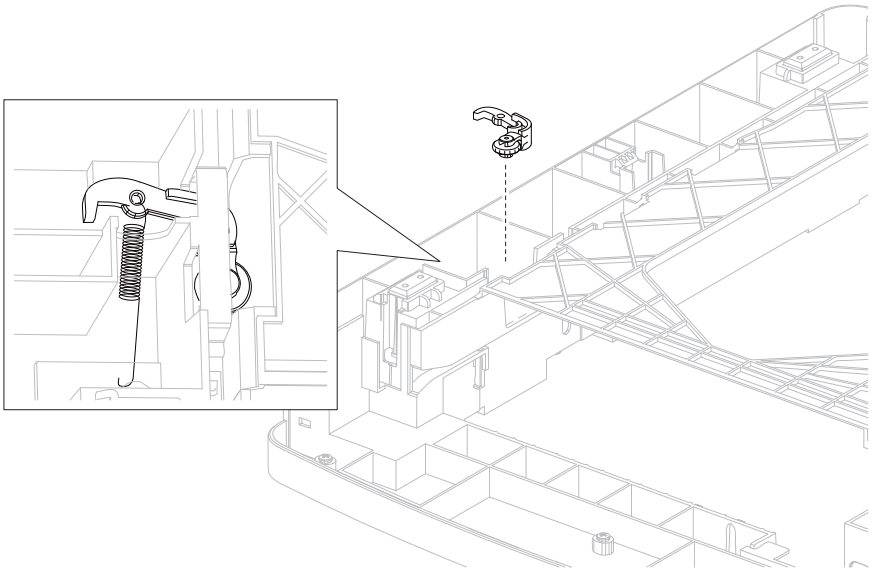

550-sheet option tray assembly

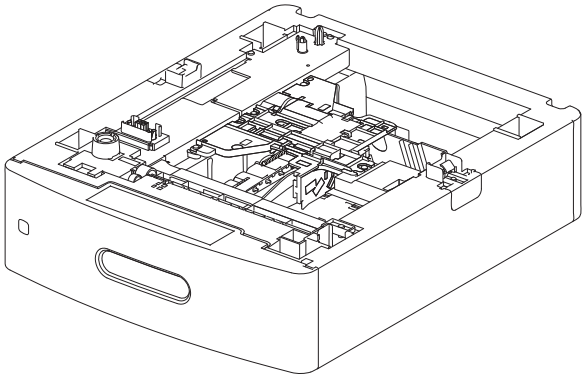

4-bin mailbox removals

4-bin mailbox assembly left cover removal

1 Place the 4-bin mailbox assembly on its side.

2 Remove the two screws (A) on the underside of the 4-bin mailbox assembly securing the left cover.

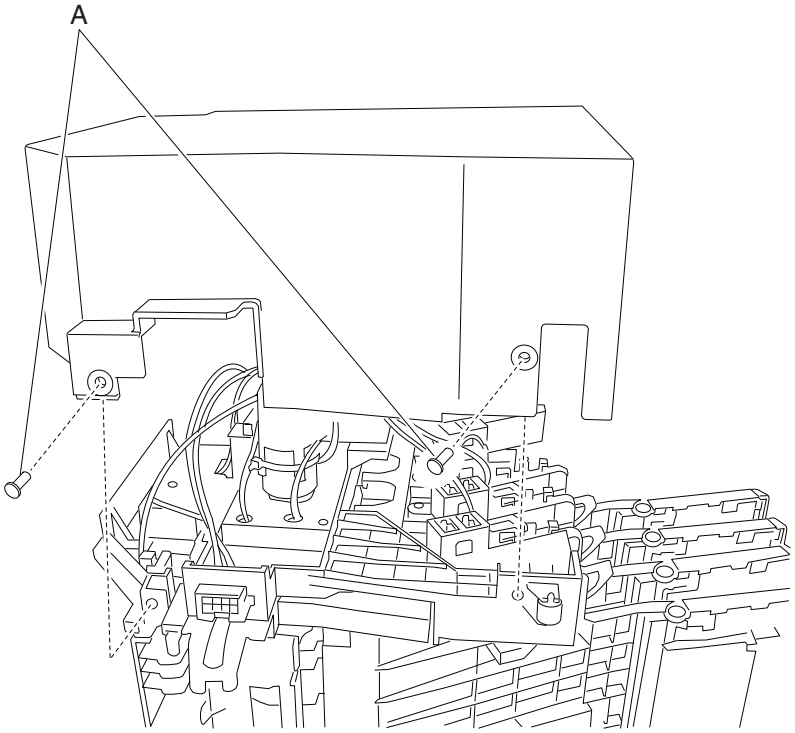

3 Using your finger, pull up on the top surface of the left cover while simultaneously pulling out, and remove.

4-bin mailbox assembly controller card assembly removal

1 Remove the 4-bin mailbox assembly left cover. Go to **"4-bin mailbox assembly left cover removal" on page 386**.

2 Disconnect all harnesses from the controller card.

Note: Label each deflector gate solenoid cable for correct replacement upon installation.

3 Remove the two screws (A) securing the controller card to the 4-bin mailbox assembly and remove.

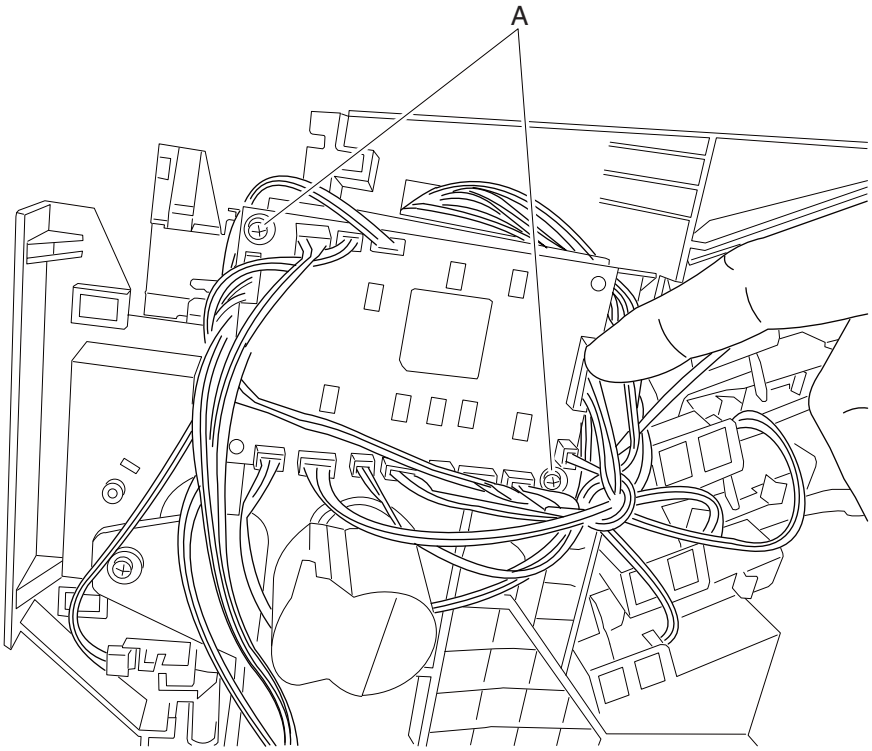

4-bin mailbox assembly sensor (media bin full) removal

1 Remove the 4-bin mailbox assembly left cover. Go to **"4-bin mailbox assembly left cover removal" on page 386**.

2 Disconnect the harness to the sensor (media bin full).

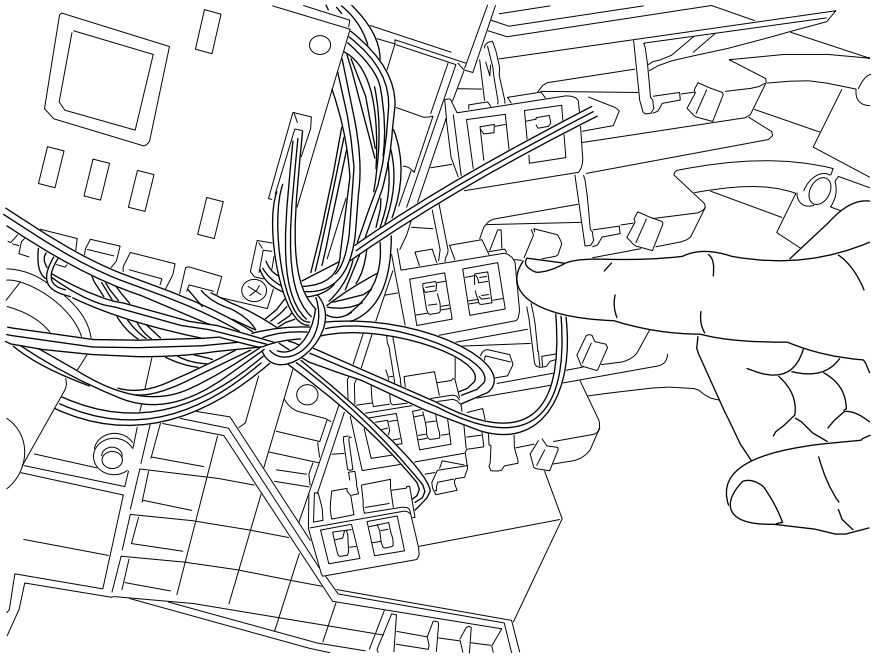

3 Pinch the tabs securing the sensor (media bin full) to the media tray and remove.

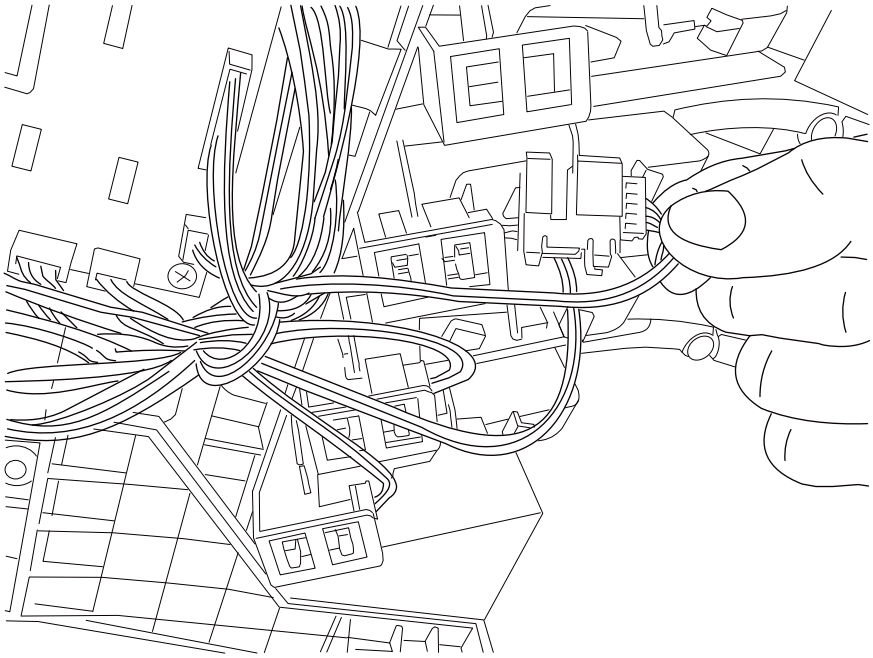

4-bin mailbox assembly sensor (deflector gate HP) removal

1 Remove the 4-bin mailbox assembly left cover. Go to **"4-bin mailbox assembly left cover removal" on page 386**.

2 Remove the 4-bin mailbox assembly rear door assembly. Go to **"4-bin mailbox assembly rear door assembly removal" on page 389**.

3 Remove the 4-bin mailbox assembly left rear inner cover.

4 Release the tabs securing the sensor (deflector gate HP) and remove the sensor from the 4-bin mailbox assembly.

5 Disconnect the harness from the sensor (deflector gate HP).

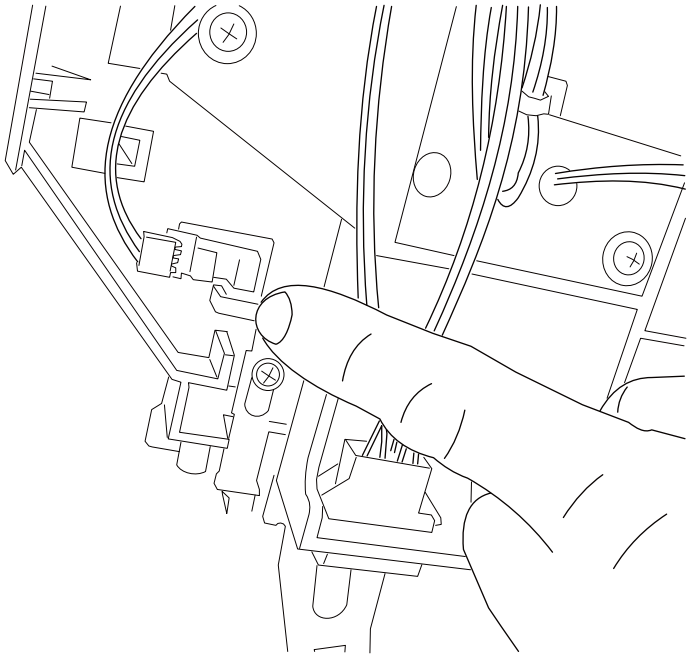

4-bin mailbox assembly rear door assembly removal

1 Open the rear door.

2 Gently spread each side of the 4-bin mailbox assembly until the rear door hinge is free to be removed.

3 Remove the rear door assembly.

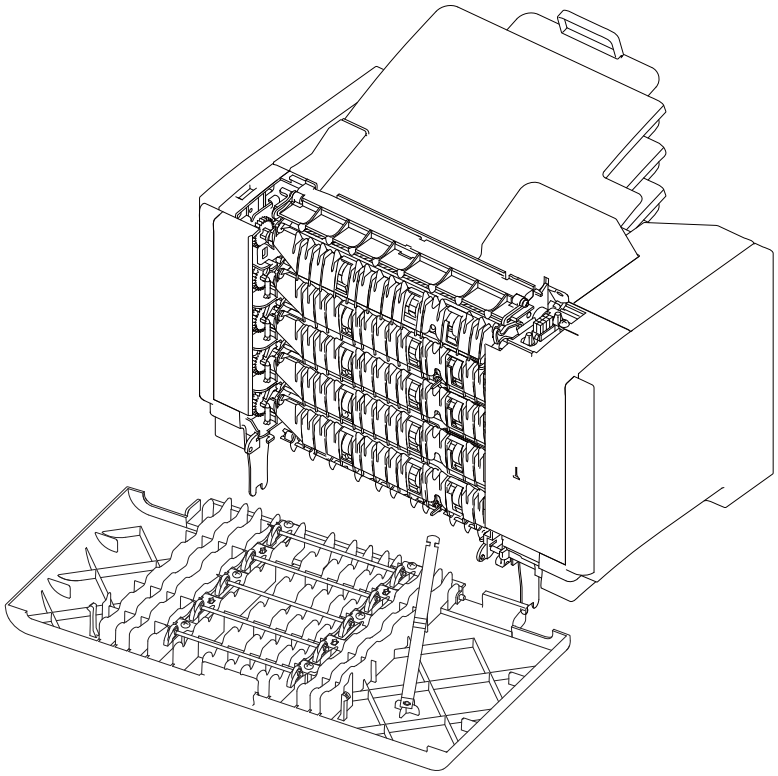

4-bin mailbox assembly right cover removal

1 Place the 4-bin mailbox assembly on its side.

2 Remove the two screws (A) from the bottom side of the right cover securing cover in place.

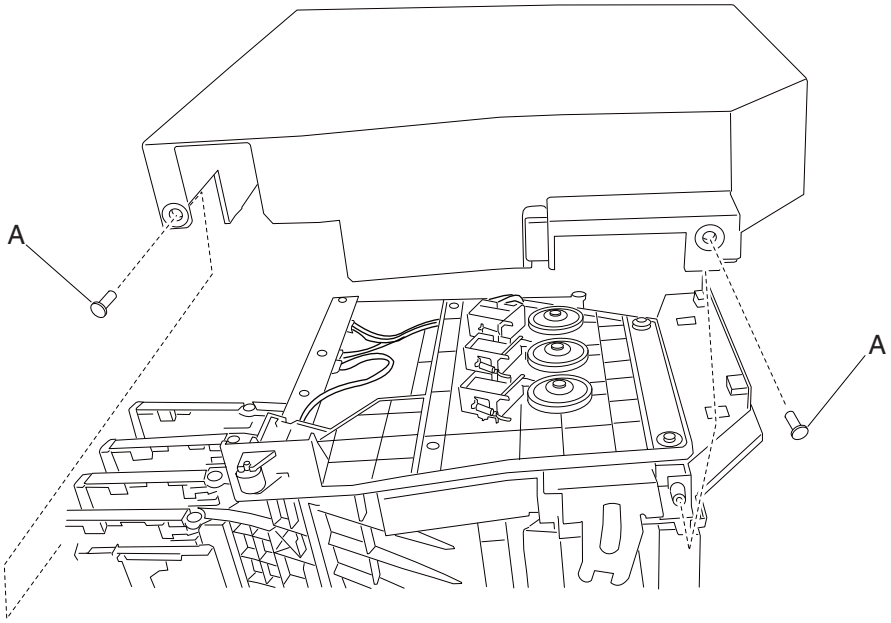

3 Using your fingers, pull up on the top of the right cover and pull out simultaneously to remove.

4-bin mailbox assembly LED card assembly removal

1 Remove the 4-bin mailbox assembly right cover. Go to **"4-bin mailbox assembly right cover removal" on page 390**.

2 Disconnect the three wire harnesses attached to the LED card assembly.

3 Remove the three screws (A) securing the LED card assembly to the 4-bin mailbox assembly.

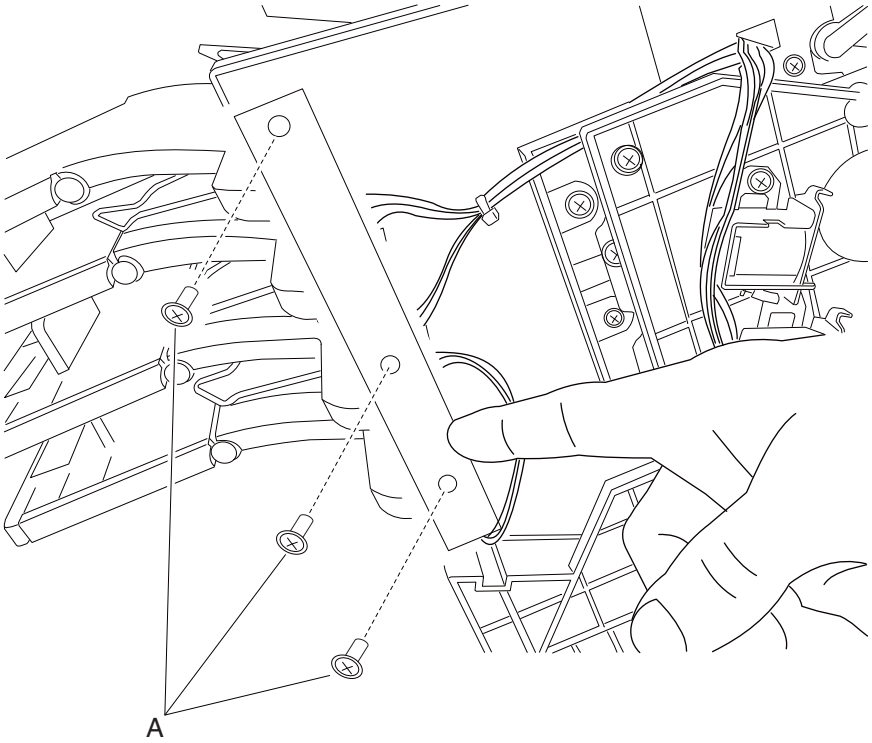

4 Remove the 4-bin mailbox assembly LED card assembly.

4-bin mailbox assembly top cover removal

1 Remove the 4-bin mailbox assembly left cover. Go to **"4-bin mailbox assembly left cover removal" on page 386**.

2 Remove the 4-bin mailbox assembly right cover. Go to **"4-bin mailbox assembly right cover removal" on page 390**.

3 Remove the four screws (A) on each side of the top cover securing it to the 4-bin mailbox assembly.

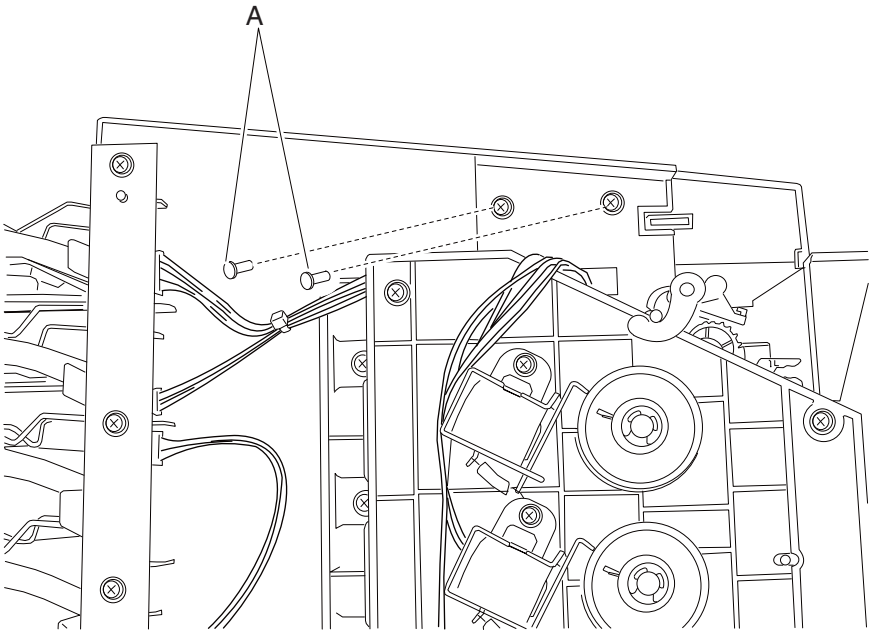

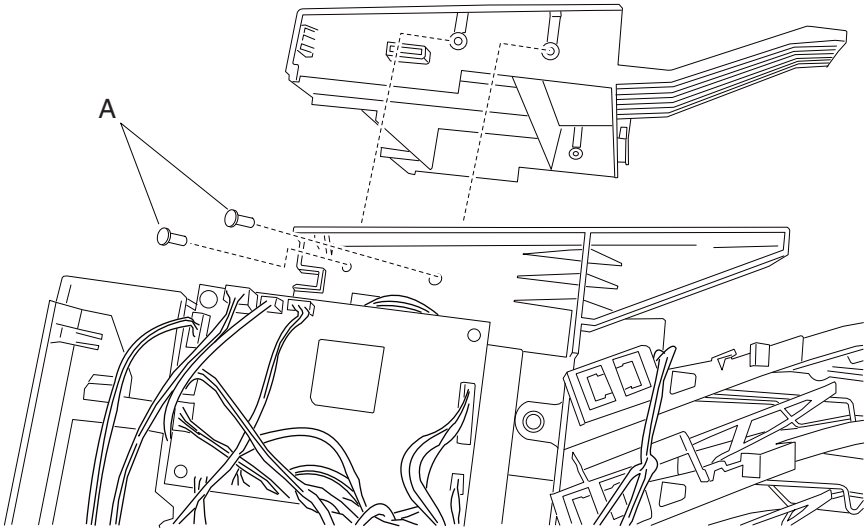

4 Slide the top cover towards the rear and remove.

4-bin mailbox assembly deflector gate solenoid removal

1 Remove the 4-bin mailbox assembly top cover. Go to **"4-bin mailbox assembly top cover removal" on page 391**.

2 Remove the screw (A) securing the deflector gate solenoid to the 4-bin mailbox assembly.

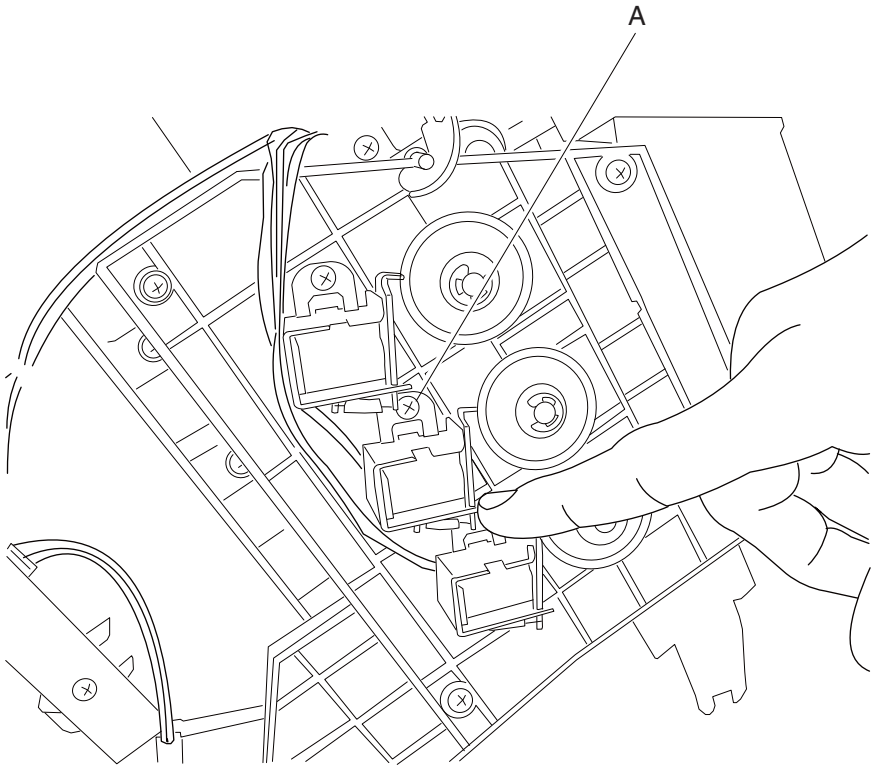

3 Carefully unroute the deflector gate solenoid cables from the cable clips under the top cover.

4 Disconnect the appropriate deflector gate solenoid cable from the controller card.

5 Pull the deflector gate solenoid and the harness from the 4-bin mailbox assembly.

4-bin mailbox assembly transport solenoid removal

1 Remove the 4-bin mailbox assembly left cover. Go to **"4-bin mailbox assembly left cover removal" on page 386**.

2 Remove the left rear inner cover.

3 Disconnect the transport solenoid cable from the controller card.

4 Remove the screw (A) securing the transport solenoid to the 4-bin mailbox assembly.

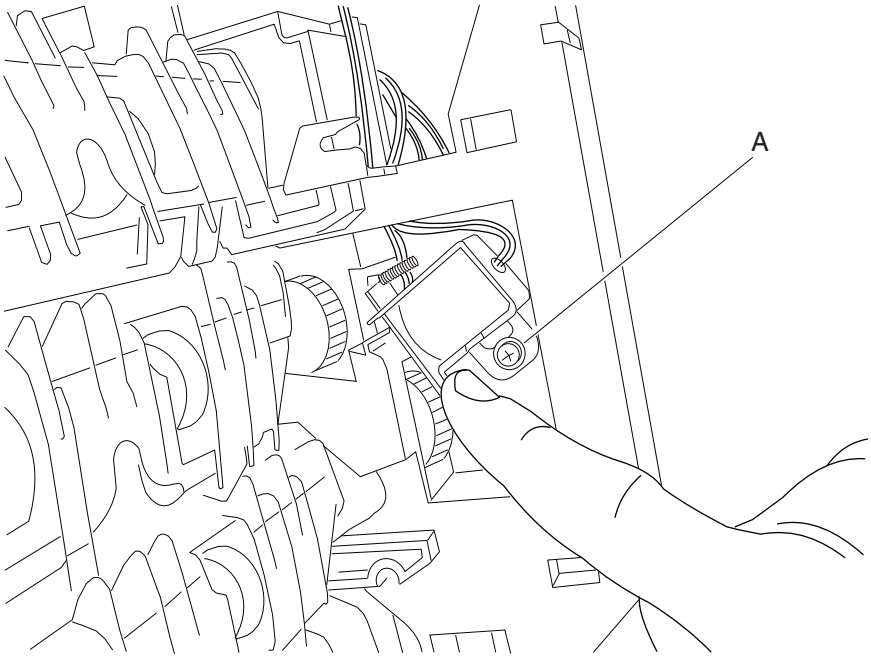

5 Remove the transport solenoid and pull the cable through the left side frame.

4-bin mailbox assembly spring removal

1 Remove the 4-bin mailbox assembly rear door assembly. Go to **"4-bin mailbox assembly rear door assembly removal" on page 389**.

2 Using a spring hook or needlenose pliers, remove the spring off the hooks.

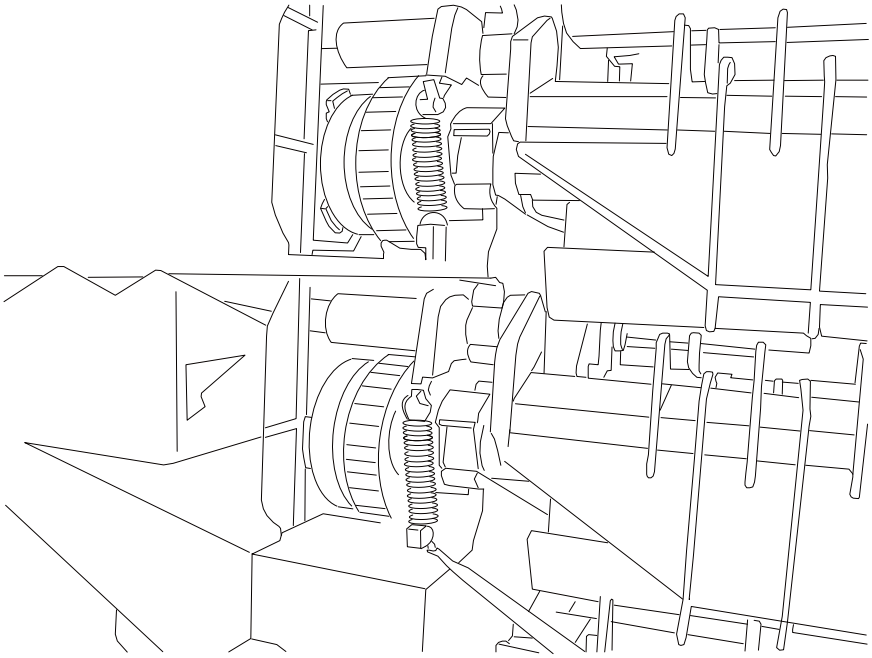

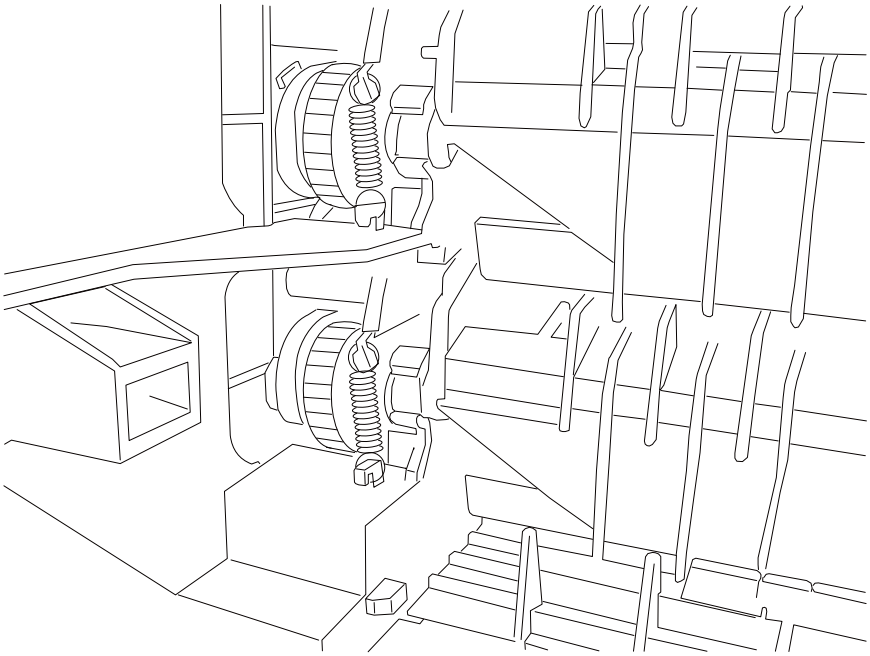

4-bin mailbox assembly deflector gate (bin 1 through 3) removal

1. Remove the 4-bin mailbox assembly rear door assembly. Go to **"4-bin mailbox assembly rear door assembly removal" on page 389**.
2. Remove the 4-bin mailbox assembly right rear inner cover.
3. Remove the 4-bin mailbox assembly spring. Go to **"4-bin mailbox assembly spring removal" on page 394**.
4. Grasp the deflector gate and pull it out of its socket on each side. Carefully remove the diverter from the machine.

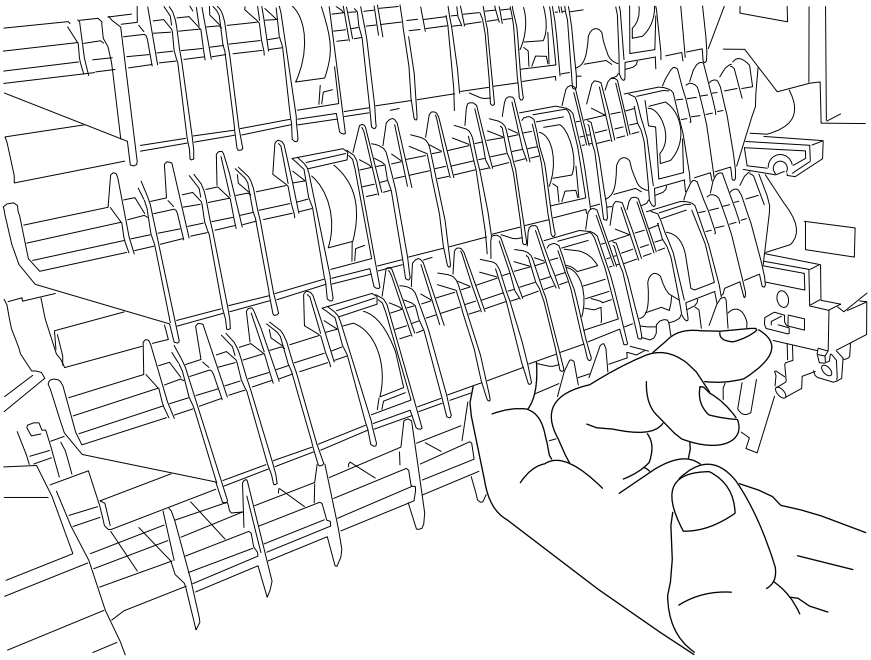

4-bin mailbox assembly deflector gate (bin 4) removal

1 Remove the 4-bin mailbox assembly rear door assembly. Go to **“4-bin mailbox assembly rear door assembly removal” on page 389**.

2 Grasp the 4th bin deflector gate and pull out on either side.

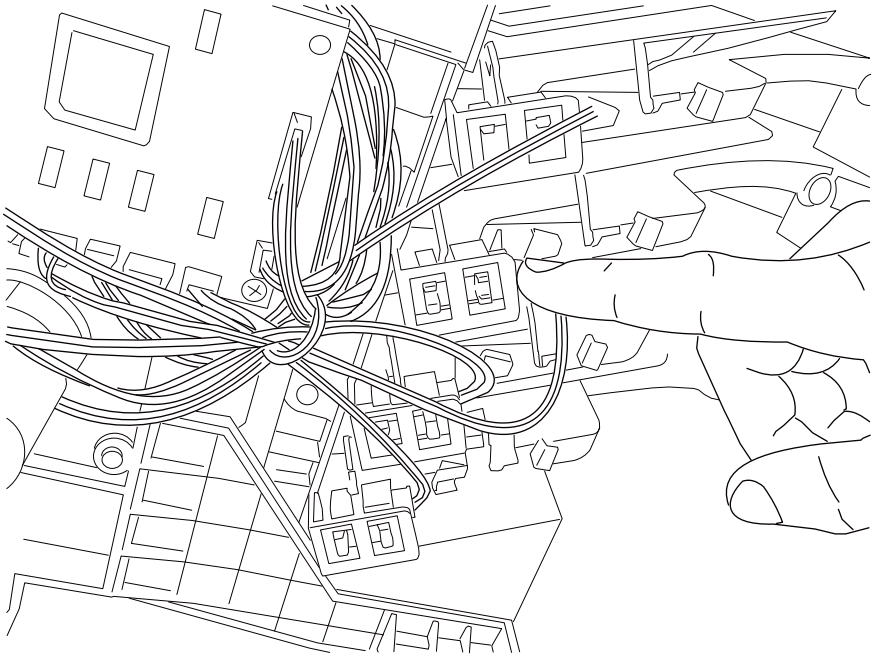

4-bin mailbox assembly sensor (pass through) removal

Note: The sensor (pass through) is the lower rear sensor. The rear upper sensor is the sensor (mailbox empty).

1 Open the rear door.

2 Life the deflector gate above the sensor (pass through) and using a flat-blade screwdriver, release the tabs securing the sensor (pass through) to the 4-bin mailbox assembly.

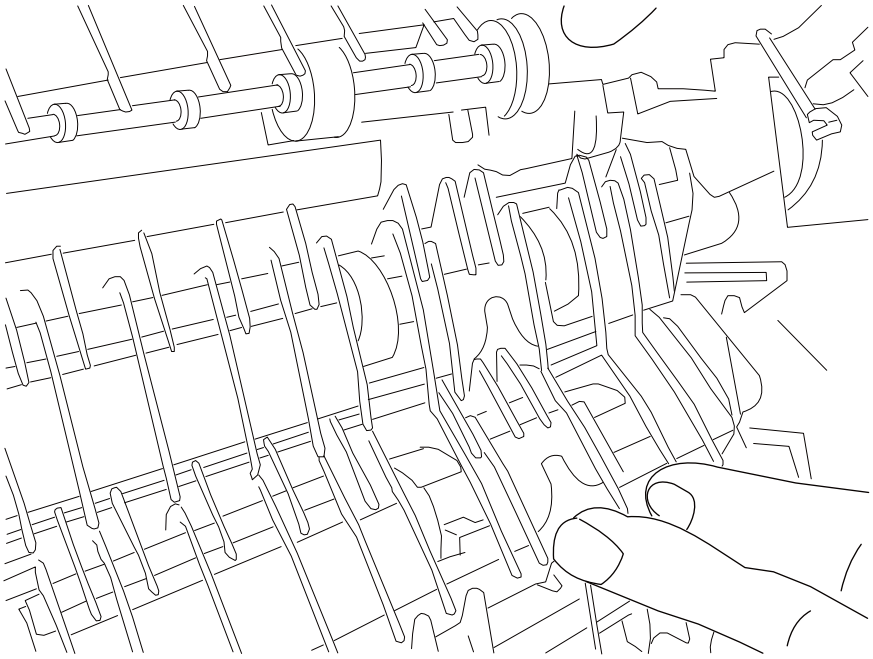

3 Remove the 4-bin mailbox assembly left cover. Go to **"4-bin mailbox assembly left cover removal" on page 386**.

4 Disconnect the sensor (pass through) harness from the controller board.

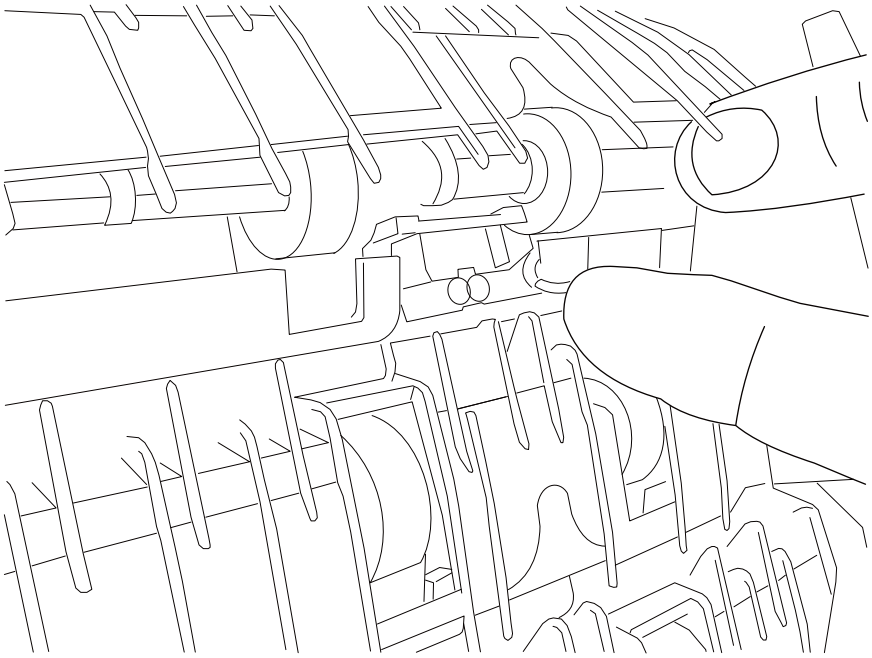

4-bin mailbox assembly sensor (mailbox empty) removal

Note: The sensor (pass through) is the lower rear sensor. The rear upper sensor is the sensor (mailbox empty).

1 Open the rear door.

2 Life the deflector gate above the sensor (mailbox empty) and using a flat-blade screwdriver, release the tabs securing the sensor (mailbox empty) to the 4-bin mailbox assembly.

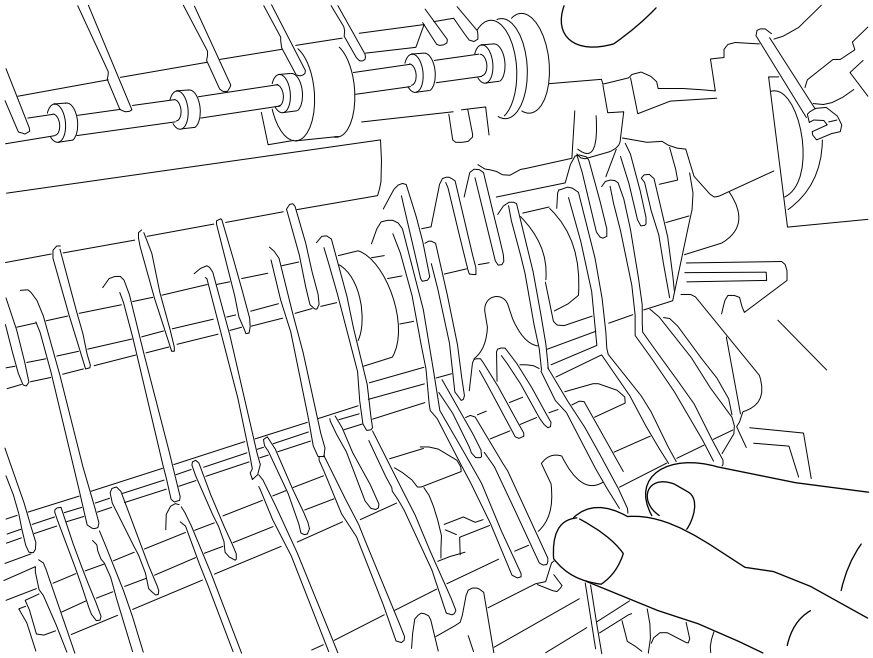

3 Remove the 4-bin mailbox assembly left cover. Go to **“4-bin mailbox assembly left cover removal” on page 386**.

4 Disconnect the sensor (mailbox empty) harness from the controller board.

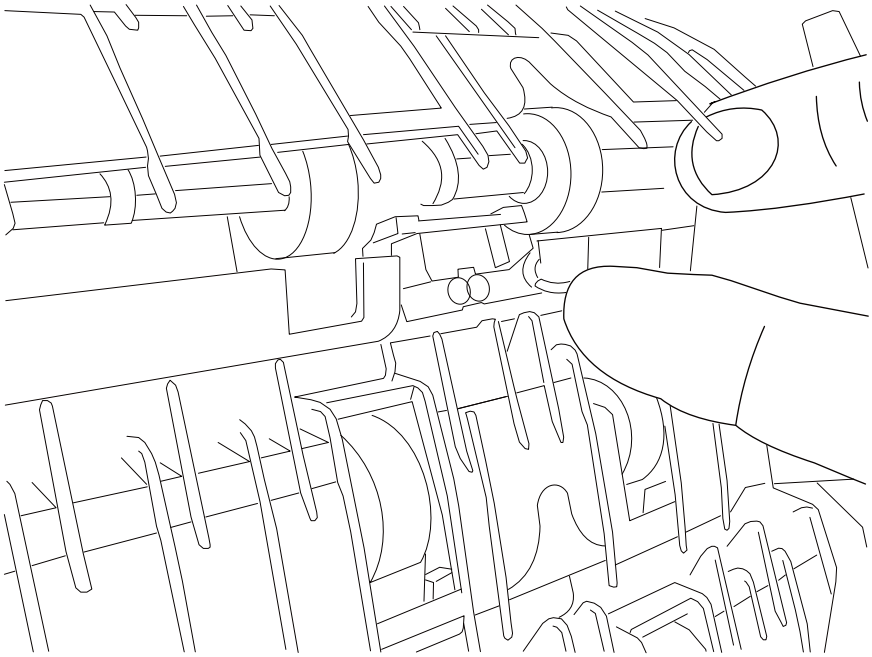

4-bin mailbox assembly standard output bin LED removal

1 Remove the three screws (A) on the underside of bin 1 securing the output bin LED bracket.

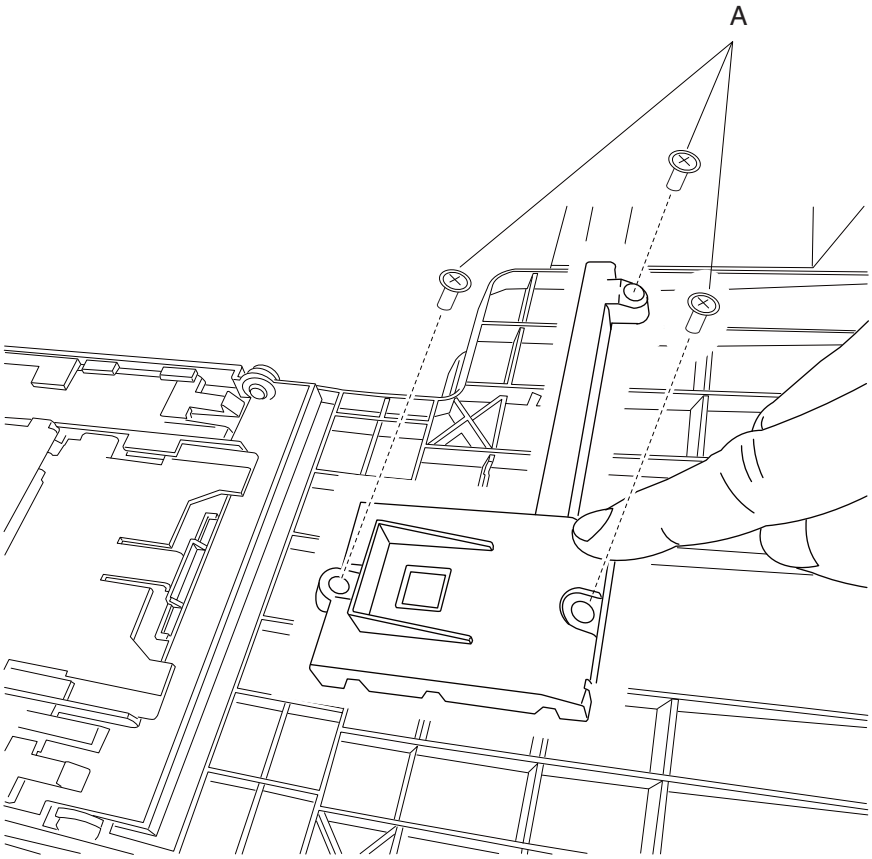

2 Pull the output bin LED bracket out from the underside of bin 1 and disconnect the LED harness.

3 Remove the two screws (B) securing the output bin LED to the bracket and remove the output bin LED.

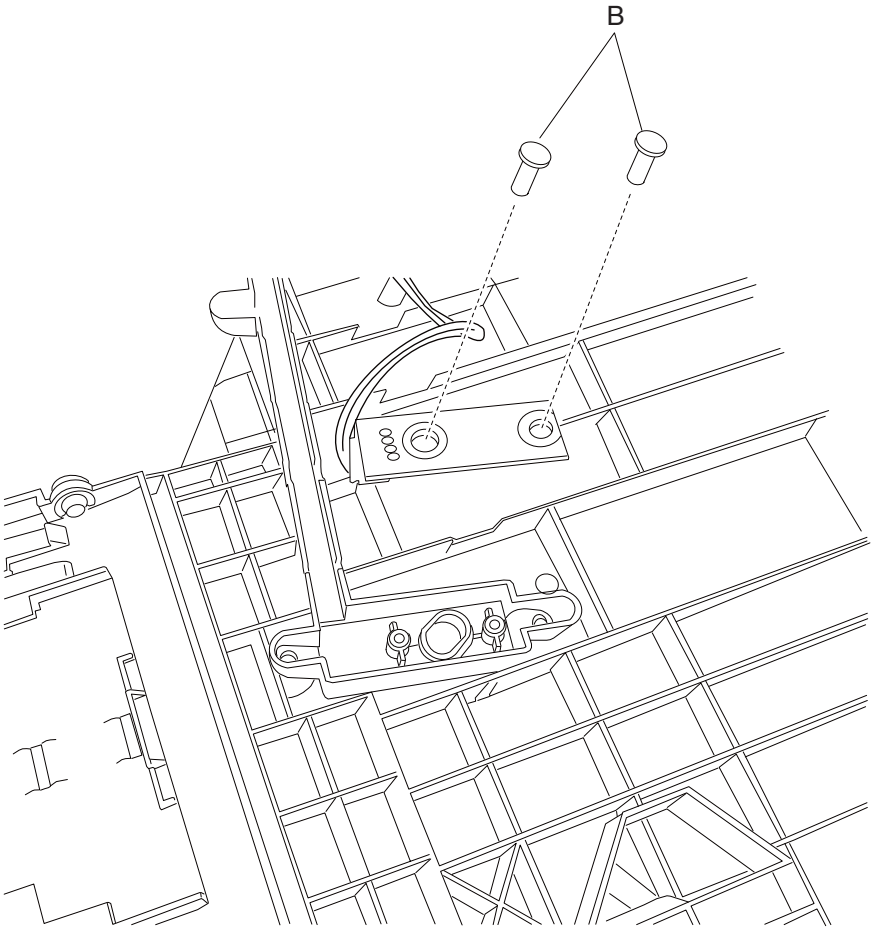

4-bin mailbox assembly LED clear lens removal

1 Remove the 4-bin mailbox assembly standard output bin LED. Go to **“4-bin mailbox assembly standard output bin LED removal” on page 400**.

2 Remove the output bin LED clear lens from the output bin LED bracket.

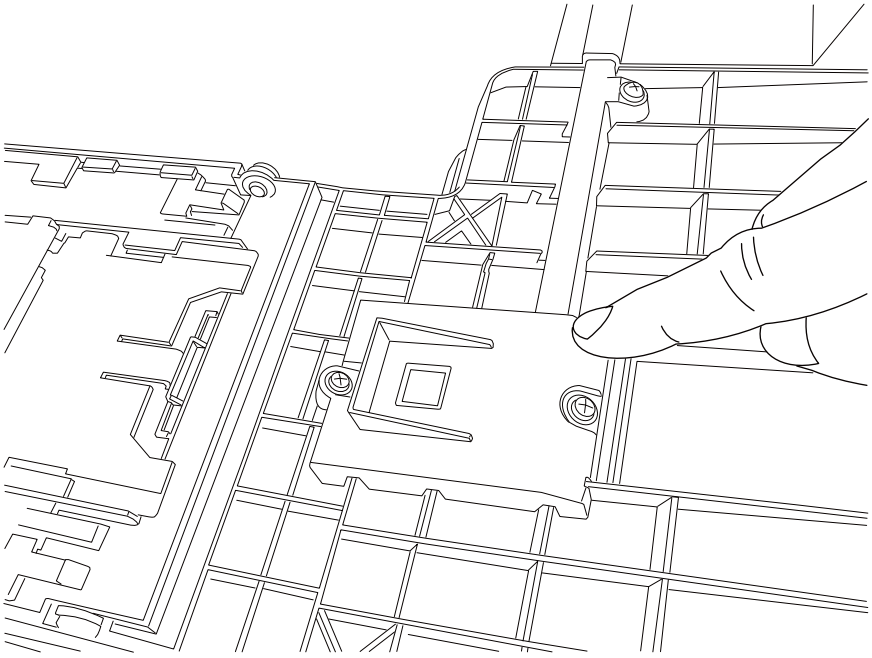

4-bin mailbox assembly media bin full actuator removal

1 Remove the 4-bin mailbox assembly left cover. Go to **“4-bin mailbox assembly left cover removal” on page 386**.

2 Pry the front hinge of the media bin full actuator towards the rear until the front boss is released from its socket.

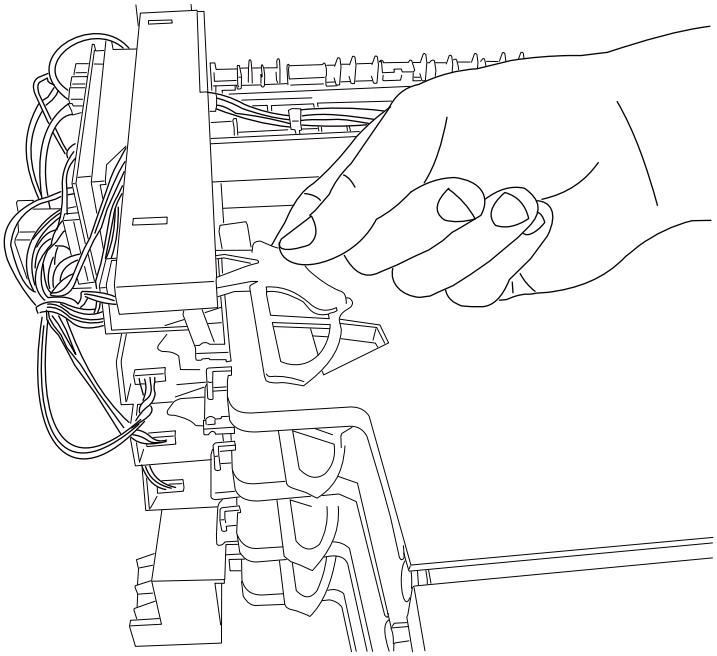

3 Pull the media bin full actuator towards the front and out of 4-bin mailbox assembly.

250-sheet option tray removals

250-sheet media tray assembly removal

Note: This removal procedure can be applied to 250-sheet option drawer assembly.

1. Find the 250-sheet media tray assembly in the 250-sheet option drawer assembly.
2. Remove the 250-sheet media tray assembly from the 250-sheet option drawer assembly.

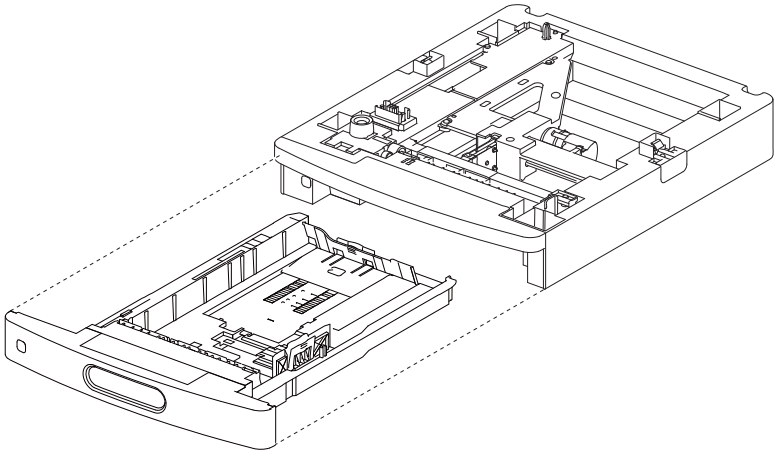

250-sheet tray pick arm bracket assembly removal

Note: Carefully remove the base machine from the input option tray assembly before proceeding.

1. Disconnect the two 250-sheet tray pick arm bracket assembly cable connectors from the 250-sheet tray controller card assembly.
2. Detach the pick arm spring from the drawer.

3 Remove the three screws (A) securing the 250-sheet tray pick arm bracket assembly to the drawer.

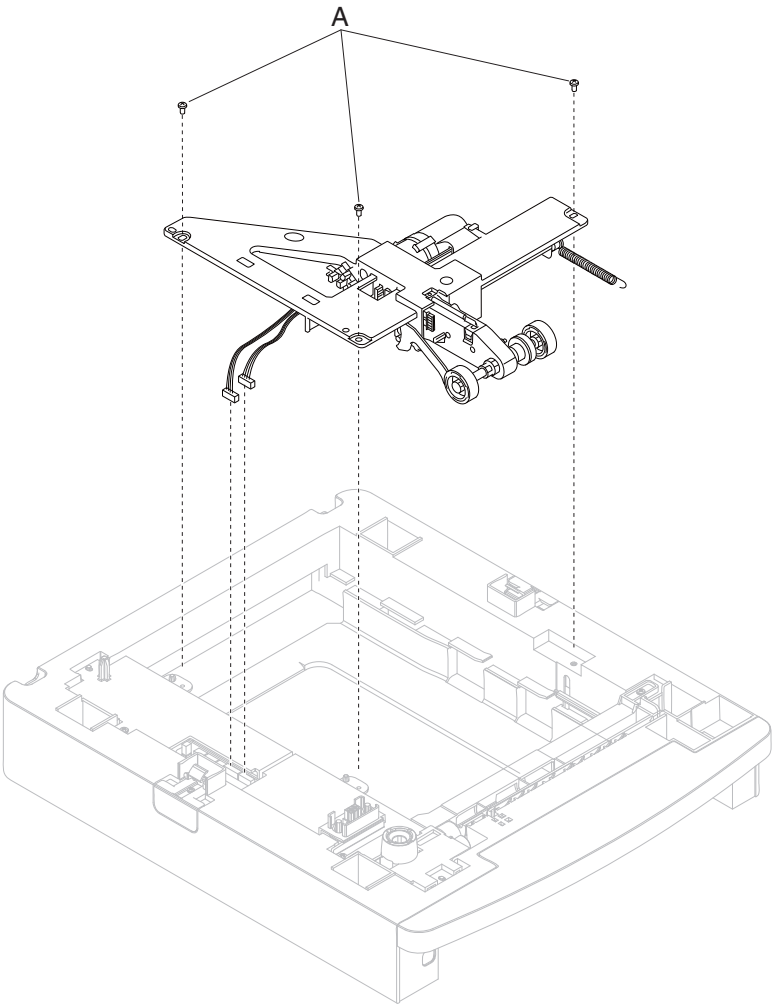

4 Remove the 250-sheet tray pick arm bracket assembly.

250-sheet tray media out actuator removal

Note: Carefully remove the base machine from the input option tray assembly before proceeding.

1 Remove the 250-sheet tray pick arm bracket assembly. Go to **"250-sheet tray pick arm bracket assembly removal" on page 404**.

2 Release the hook (A) securing the 250-sheet tray media out actuator to the 250-sheet tray pick arm bracket assembly.

3 Remove the 250-sheet tray media out actuator from the drawer.

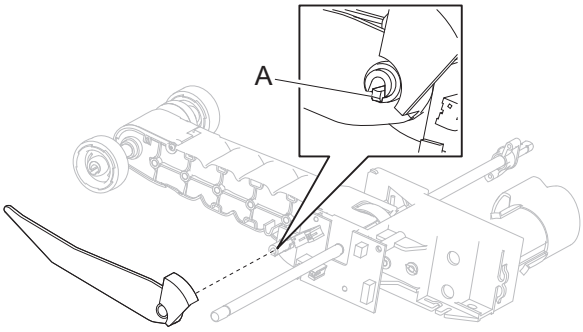

250-sheet tray frame assembly removal

Note: The 250-sheet tray frame assembly is not a FRU.

1 Remove the 250-sheet tray pick arm bracket assembly. Go to **"250-sheet tray pick arm bracket assembly removal" on page 404**.

2 Release the hooks securing the sensor (pass through) to the drawer.

3 Remove the sensor (pass through) from the drawer.

4 Remove the four screws (A) securing the 250-sheet tray frame assembly to the drawer.

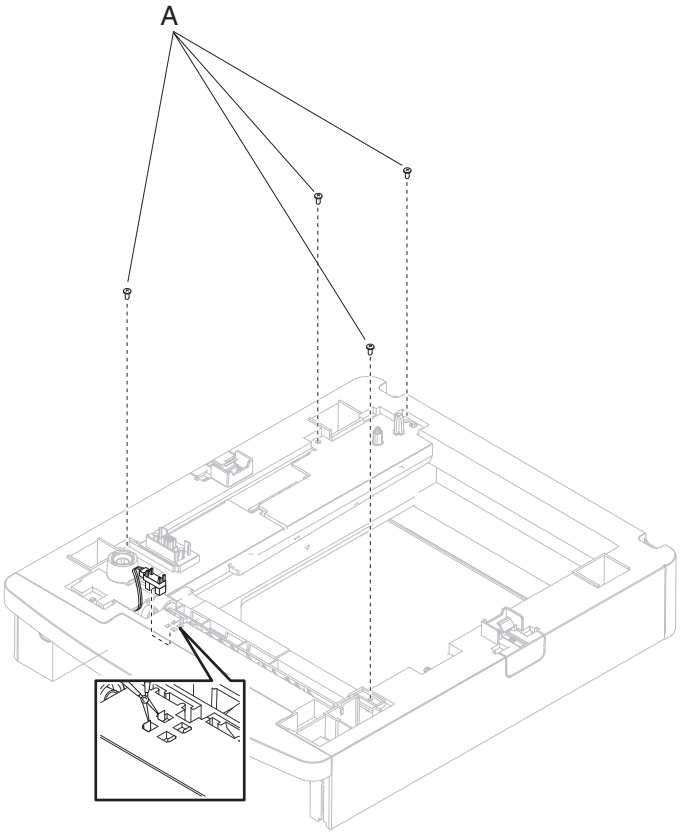

5 Remove the 250-sheet tray frame assembly.

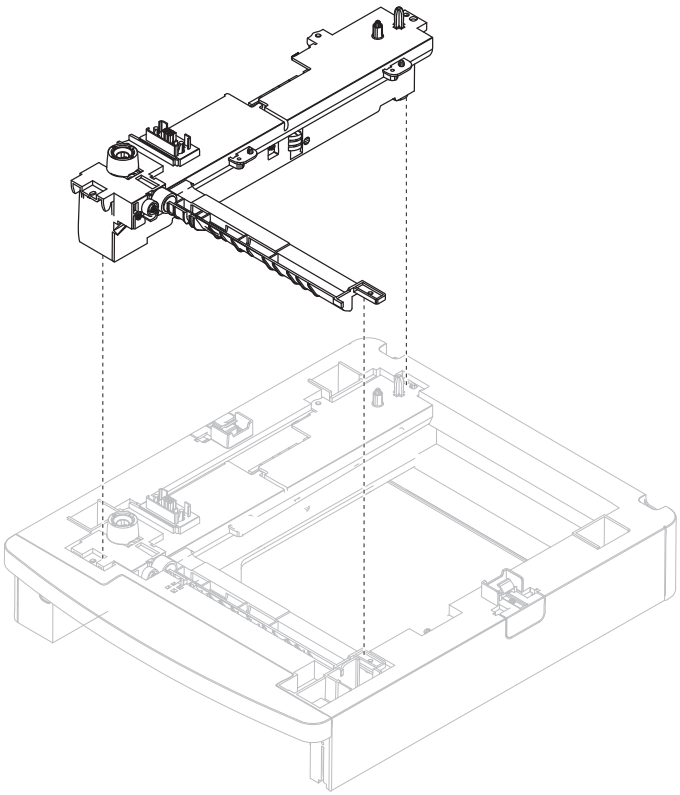

250-sheet tray controller card assembly removal

1 Remove the 250-sheet tray frame assembly. Go to **"250-sheet tray frame assembly removal" on page 406**.

2 Disconnect the three connectors from the 250-sheet tray controller card assembly.

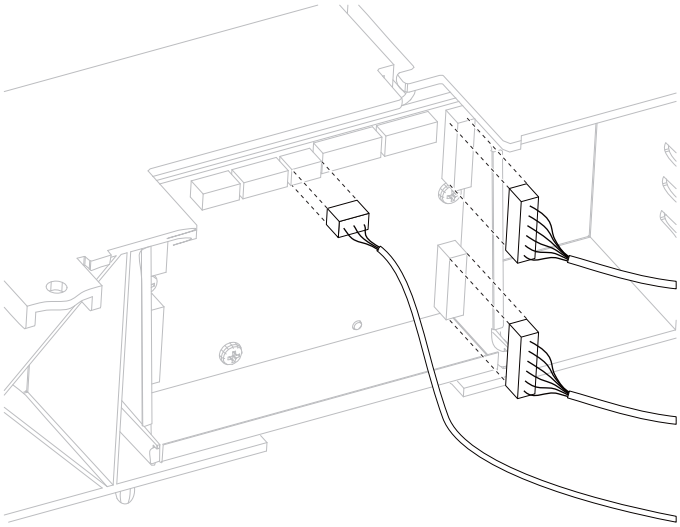

3 Remove the three screws (B) securing the 250-sheet tray controller card assembly to the 250-sheet tray frame.

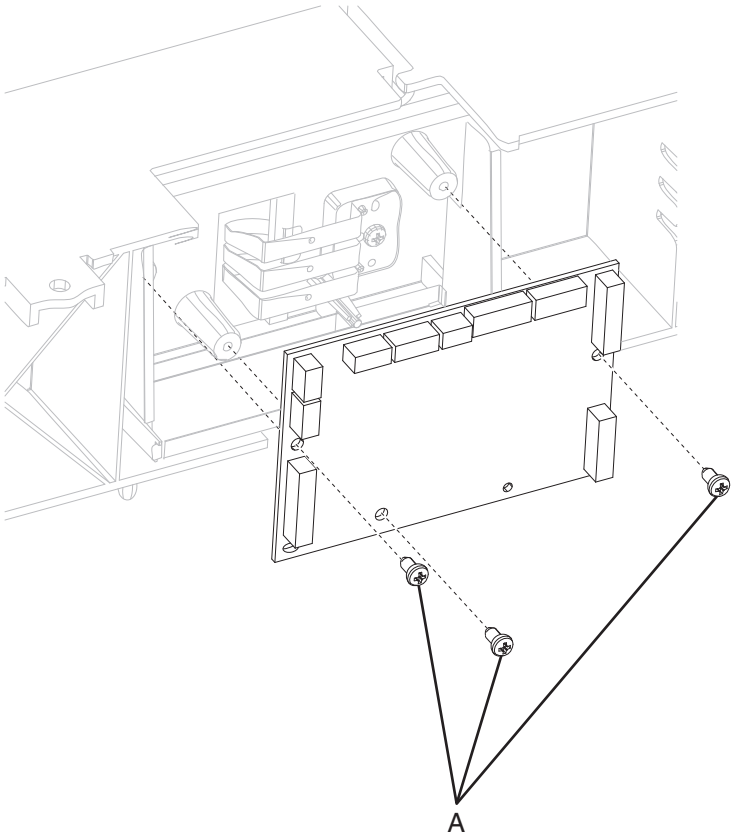

4 Remove the 250-sheet tray controller card assembly.

550-sheet option tray removals

550-sheet media tray assembly removal

Note: This removal procedure can be applied to 550-sheet option drawer assembly.

1 Find the 550-sheet media tray assembly in the 550-sheet option drawer assembly.

2 Remove the 550-sheet media tray assembly from the 550-sheet option drawer assembly.

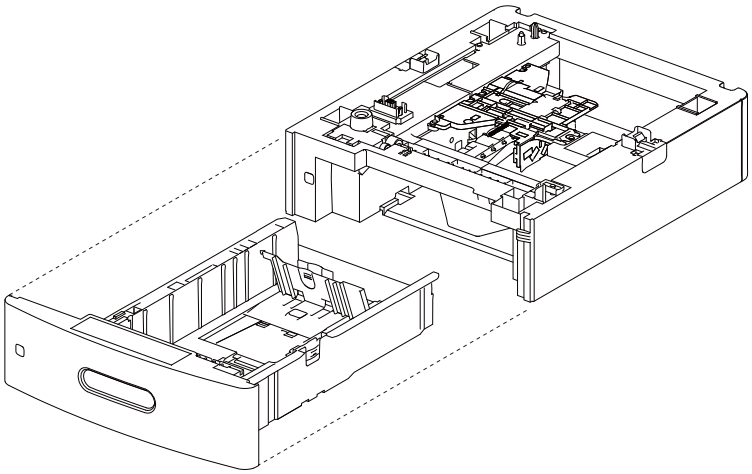

550-sheet tray pick arm bracket assembly removal

1 Remove the 550-sheet media tray assembly. Go to **"550-sheet media tray assembly removal" on page 409**.

2 Remove the two 550-sheet tray pick arm bracket assembly cable connectors (A) from the 550-sheet tray controller card assembly.

3 Detach the 550-sheet tray bellcrank recoil spring (B) from the drawer.

4 Remove the four screws (C) securing the 550-sheet tray pick arm bracket assembly to the drawer.

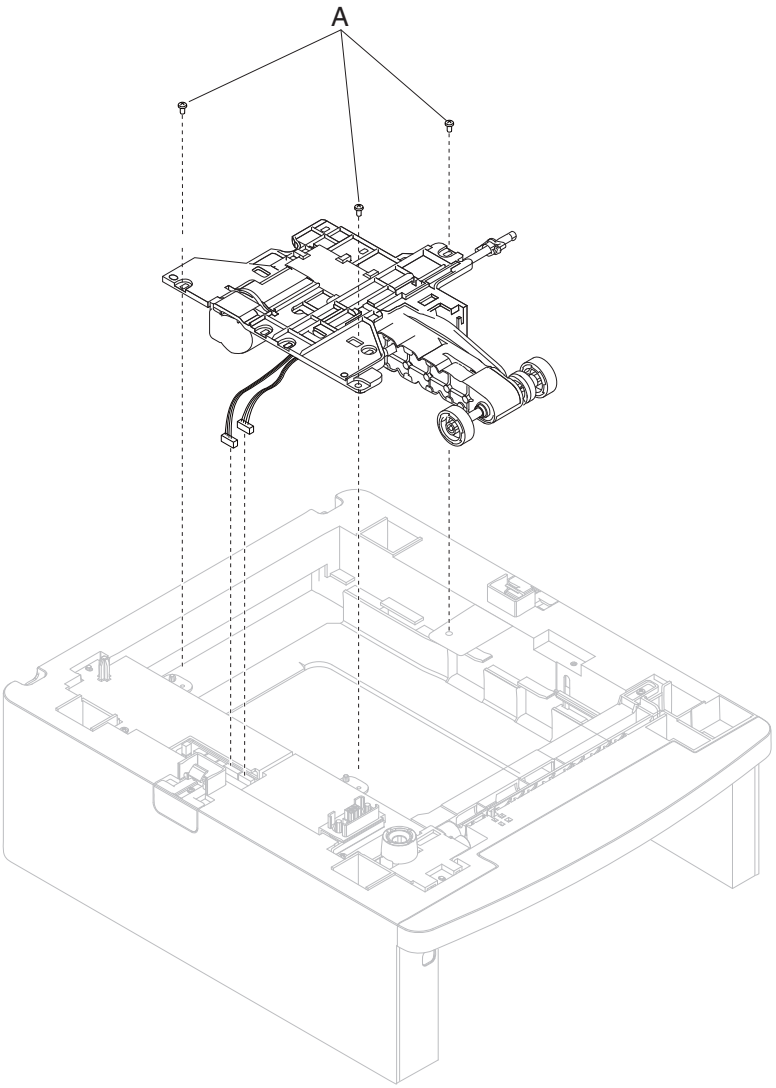

5 Remove the 550-sheet tray pick arm bracket assembly.

550-sheet tray bellcrank recoil spring removal

1 Remove the 550-sheet tray pick arm bracket assembly. Go to **"550-sheet tray pick arm bracket assembly removal" on page 409**.

2 Remove the 550-sheet tray bellcrank recoil spring from the 550-sheet tray pick arm bracket assembly.

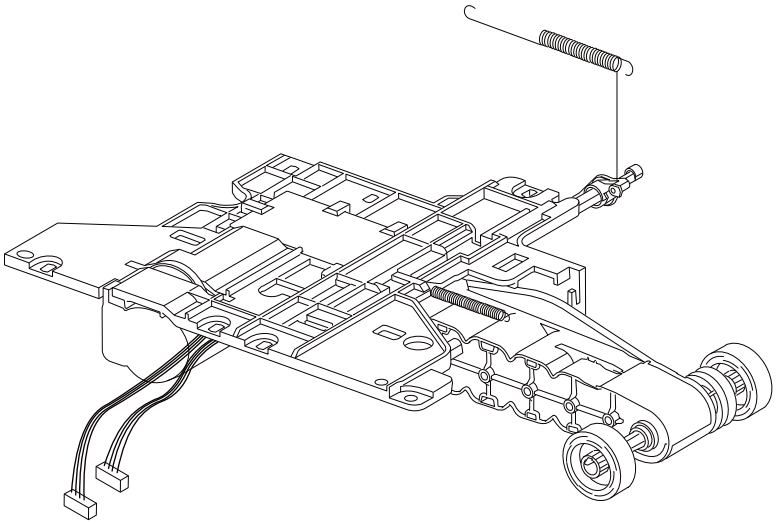

550-sheet tray frame assembly removal

Note: The 550-sheet tray frame assembly is not a FRU.

1 Remove the 550-sheet tray pick arm bracket assembly. Go to **"550-sheet tray pick arm bracket assembly removal" on page 409**.

2 Release the hooks securing the sensor (pass through) to the drawer.

3 Remove the sensor (pass through) from the drawer.

4 Remove the four screws (A) securing the 550-sheet tray frame assembly to the drawer.

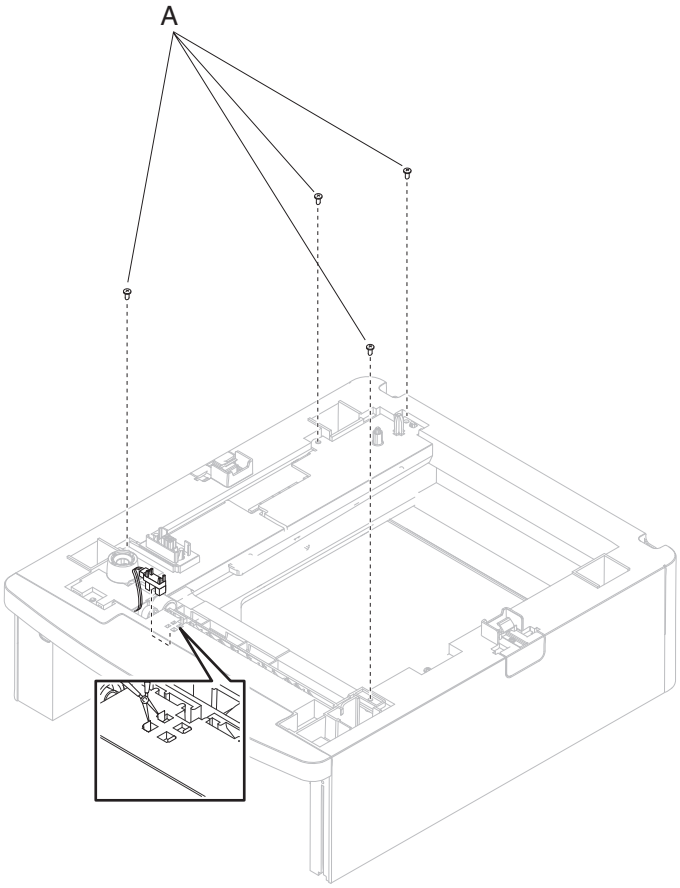

5 Remove the 550-sheet tray frame assembly.

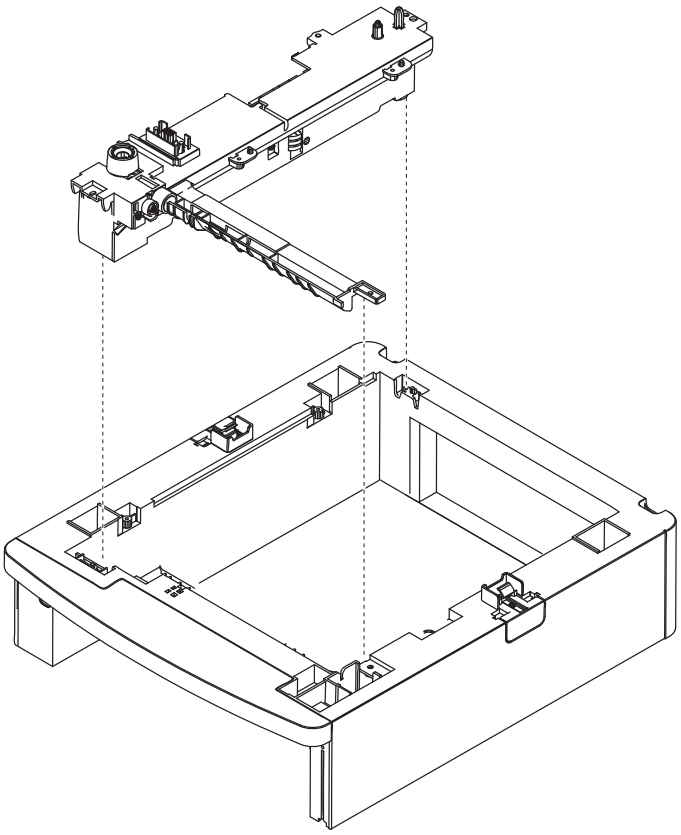

550-sheet tray controller card assembly removal

1 Remove the 550-sheet tray frame assembly. Go to **"Media size actuator removal" on page 466**.

2 Disconnect the three connectors from the 550-sheet tray controller card assembly.

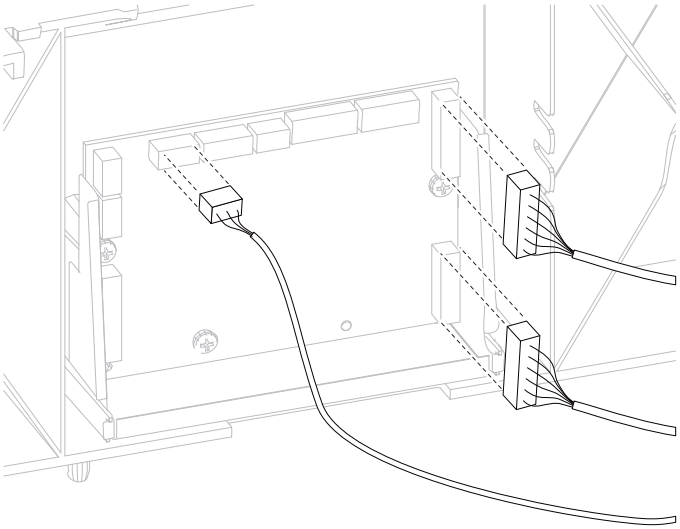

3 Remove the three screws (A) securing the 550-sheet tray controller card assembly to the 550-sheet tray frame.

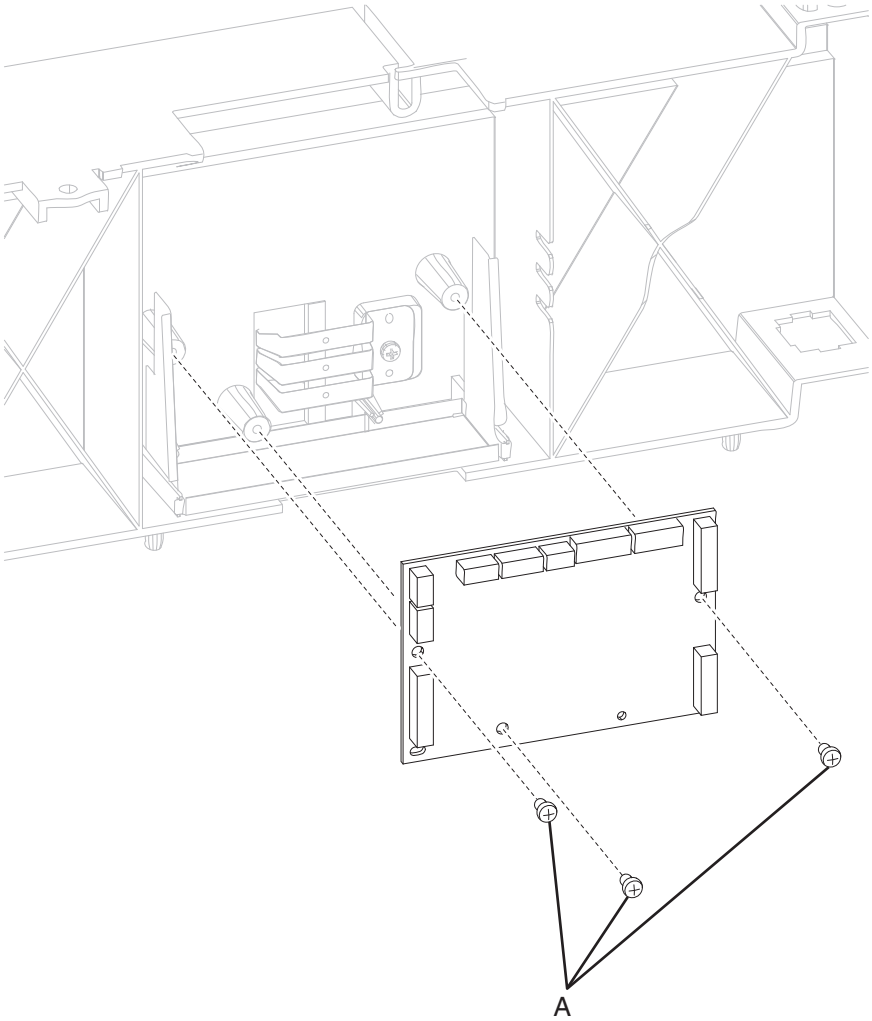

4 Remove the 550-sheet tray controller card assembly.

550-sheet tray option drive shaft with spring removal

1 Remove the 550-sheet tray frame assembly. Go to **"Media size actuator removal" on page 466**.

2 Pinch the two hooks (A) on the cap, and detach it from the 550-sheet tray frame.

3 Pull the drive roll gear (B), the shaft with spring (C), and the bevel out through the opening.

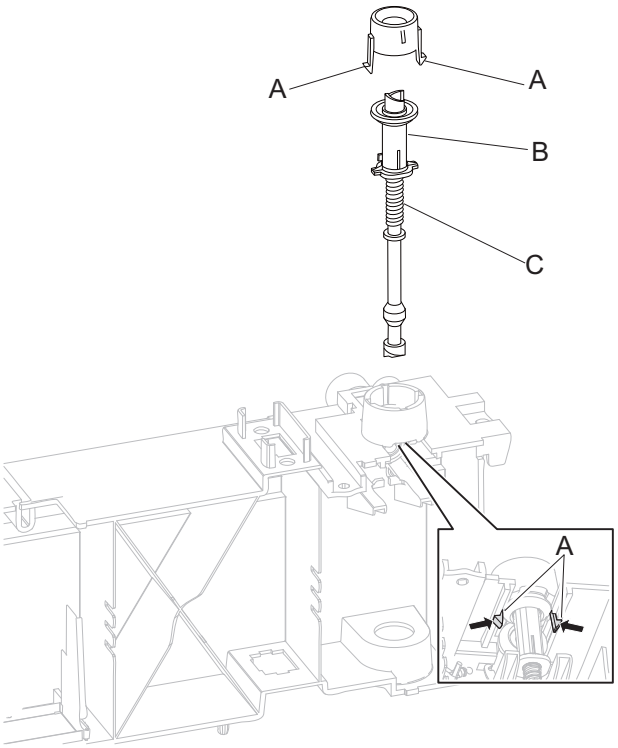

4 Remove the 550-sheet tray option drive shaft with spring.

Anti-tip latch assembly removal

Note: Carefully remove the base machine from the input option tray assembly before proceeding. The left and right anti-tip latch assemblies are the same, and only one is in a package. The instructions below are for removing the left latch, but removing the right latch is similar.

1 Remove the 250-sheet media tray assembly. Go to **"250-sheet media tray assembly removal" on page 404**.

2 Turn the drawer upside down, and unsnap the two hooks (A) securing the anti-tip latch assembly to the drawer with a flathead screwdriver.

Note: The hooks might break when detaching the anti-tip assembly from the drawer.

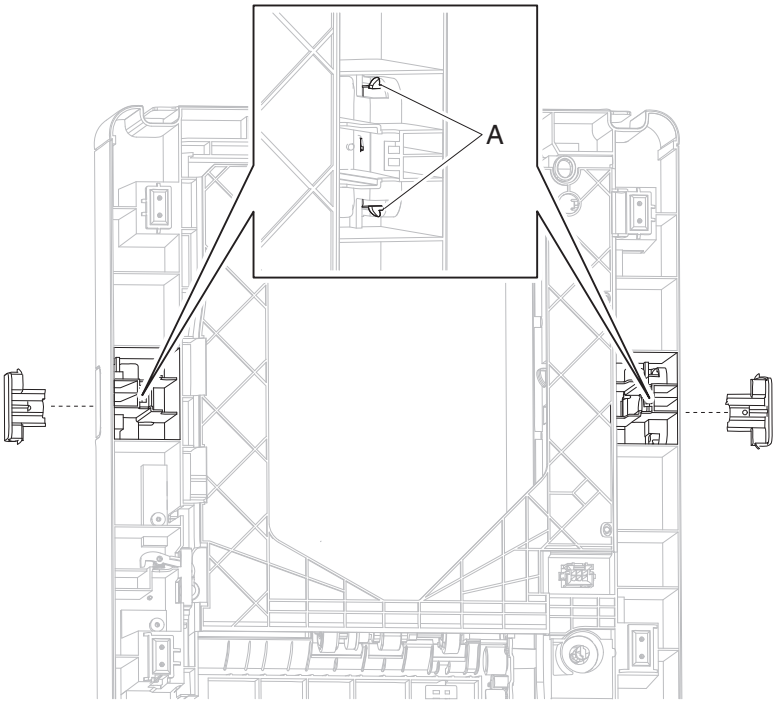

3 Remove the anti-tip latch assembly.

High capacity input tray (HCIT) removals

High capacity input tray (HCIT) media tray assembly removal

1 Open the HCIT media tray assembly until it reaches a stop.

2 Press the latches (A) on the left and right sides of the HCIT tray slides.

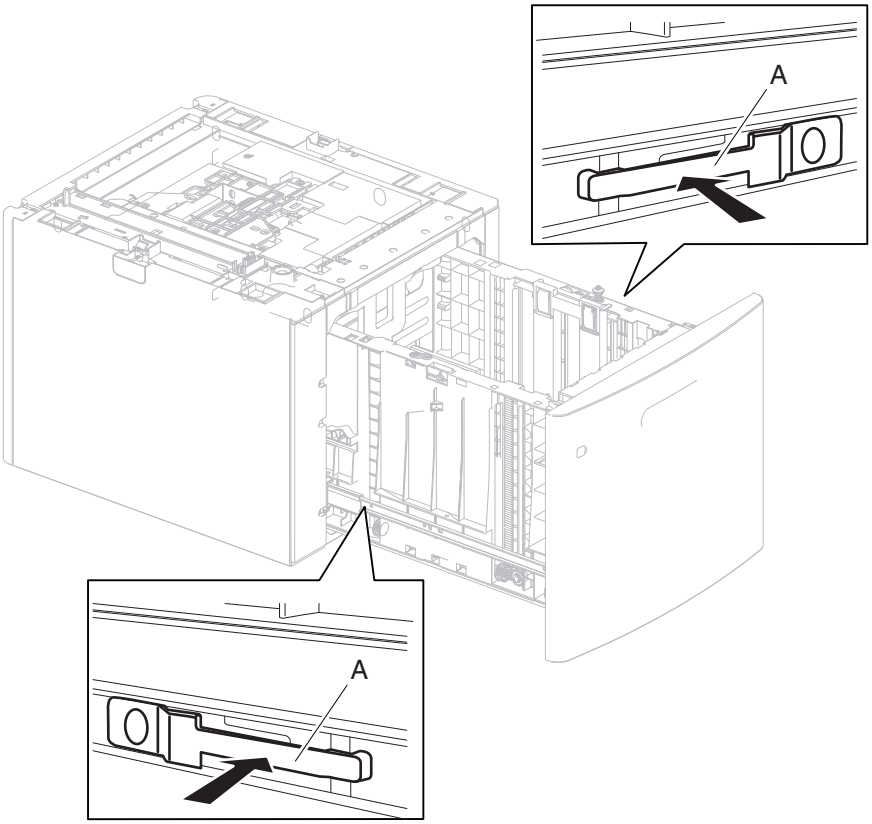

3 Slide the HCIT media tray assembly out of the drawer.

High capacity input tray (HCIT) tray cover, front removal

1 Open the HCIT media tray assembly until it reaches a stop.

2 Remove the six screws (A) securing the HCIT tray cover, front to the HCIT media tray assembly.

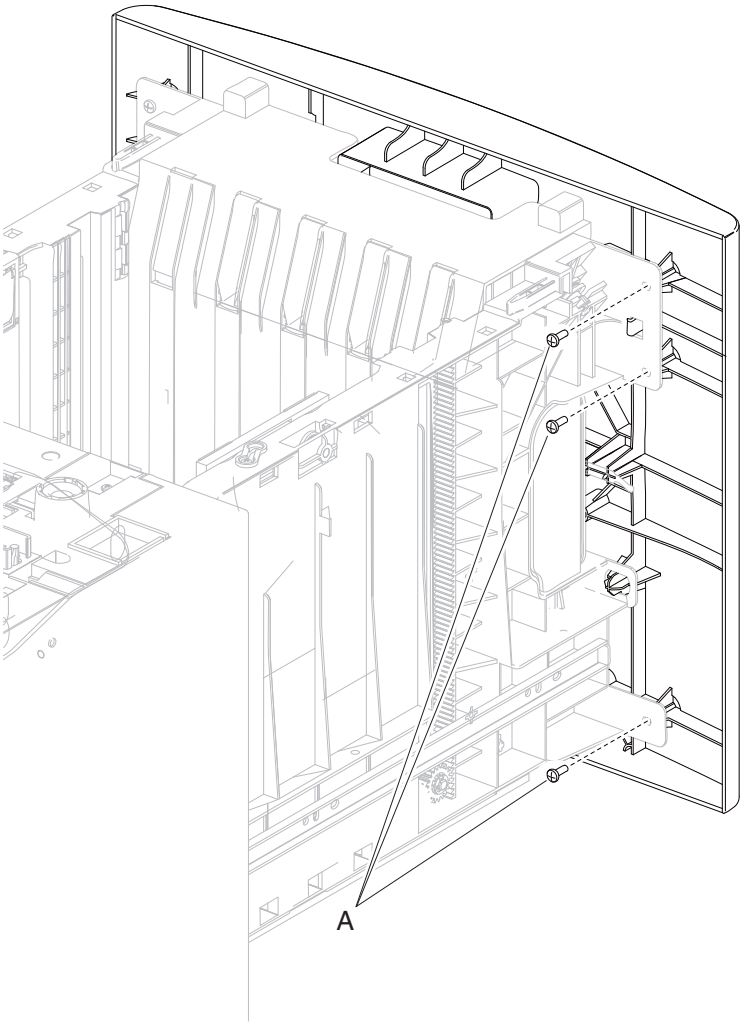

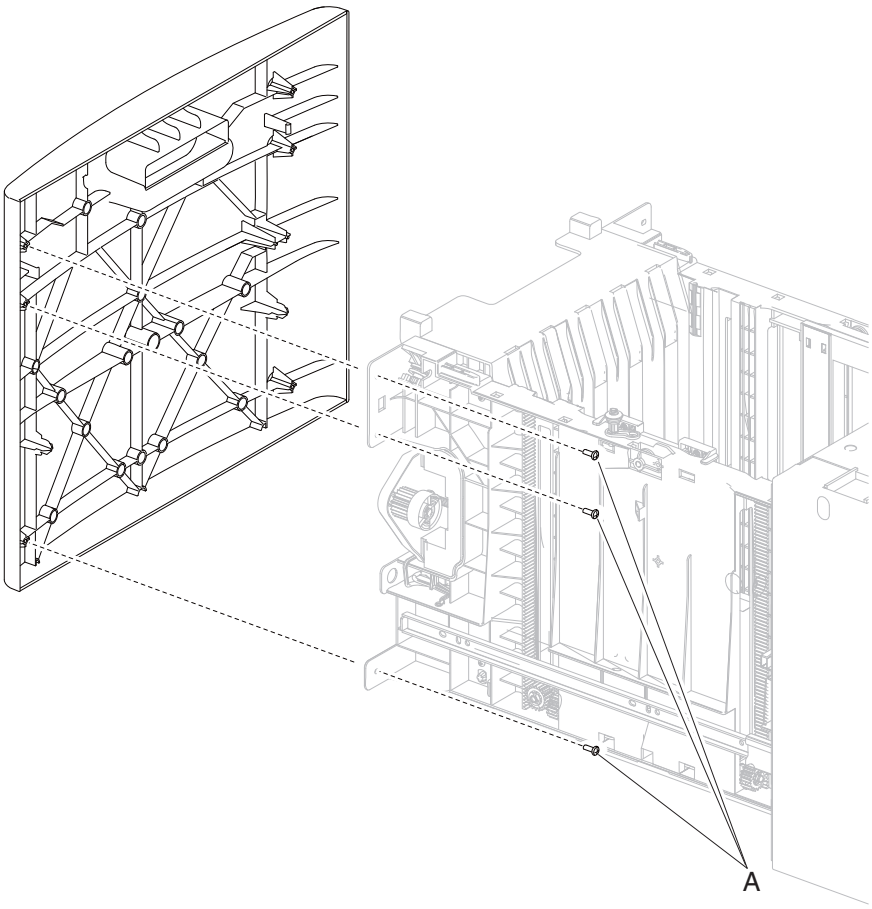

3 Remove the HCIT tray cover, front.

High capacity input tray (HCIT) cover, rear removal

1 Remove the HCIT media tray assembly. Go to **“High capacity input tray (HCIT) media tray assembly removal” on page 417**.

2 Remove the four screws (A) securing the HCIT cover, rear to the drawer.

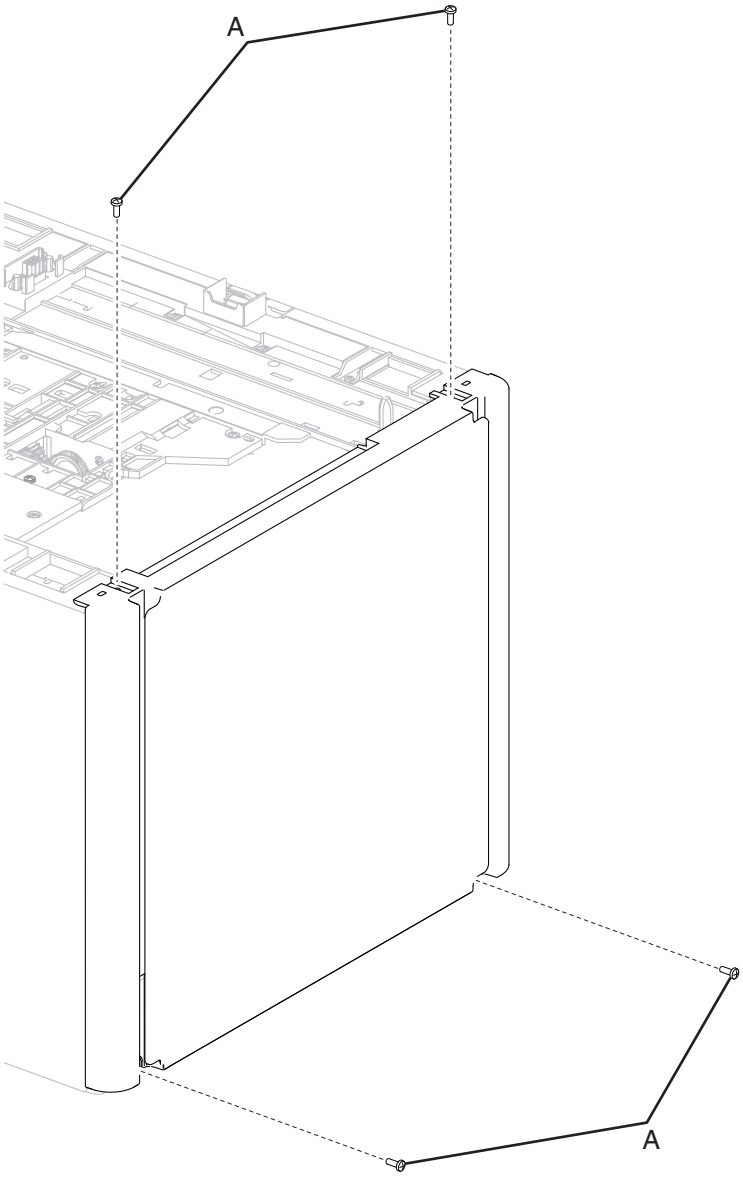

3 Remove the HCIT cover, rear.

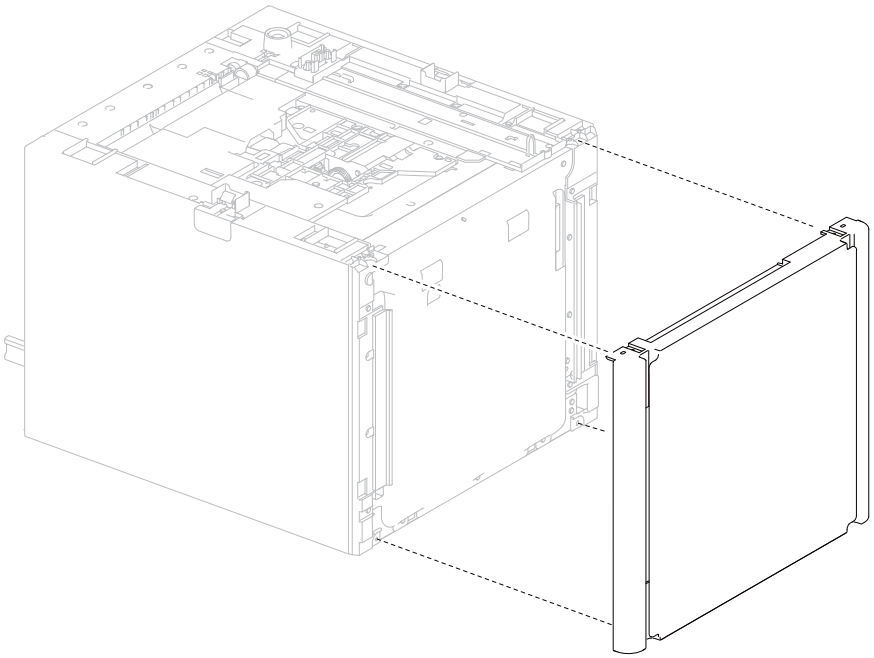

High capacity input tray (HCIT) cover, right removal

Note: Carefully remove the base machine from the HCIT tray assembly before proceeding.

Note: Before removing the HCIT right cover, first remove the right side anti-tip latch assembly. Go to **"High capacity input tray (HCIT) anti-tip latch assembly removal" on page 425**.

1 Remove the high capacity input tray (HCIT) cover, rear. Go to **"High capacity input tray (HCIT) cover, rear removal" on page 420**.

2 Remove the four screws (A) securing the HCIT cover, right to the drawer.

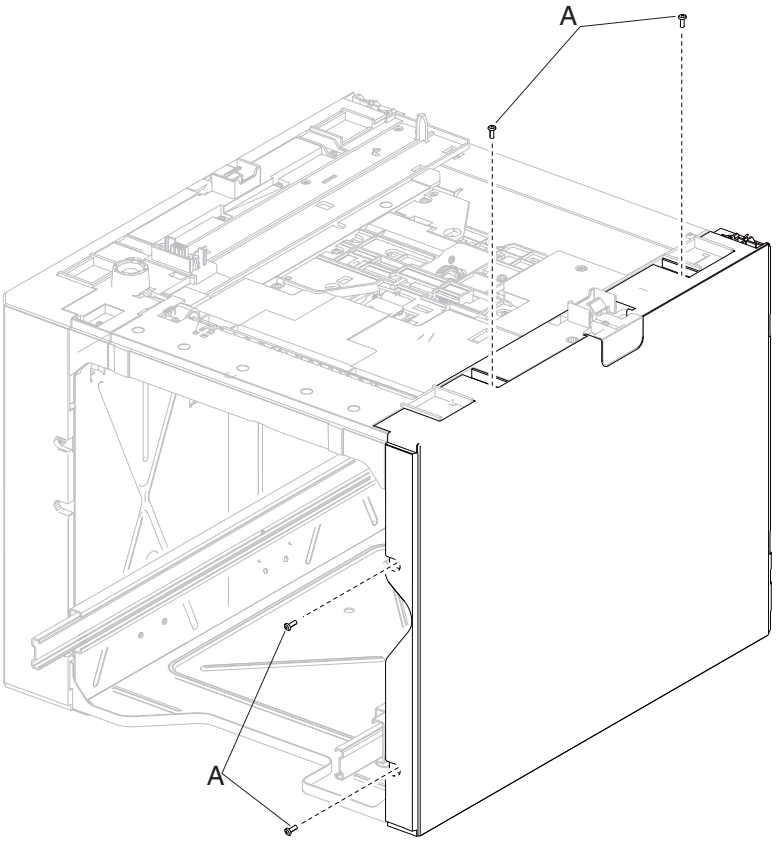

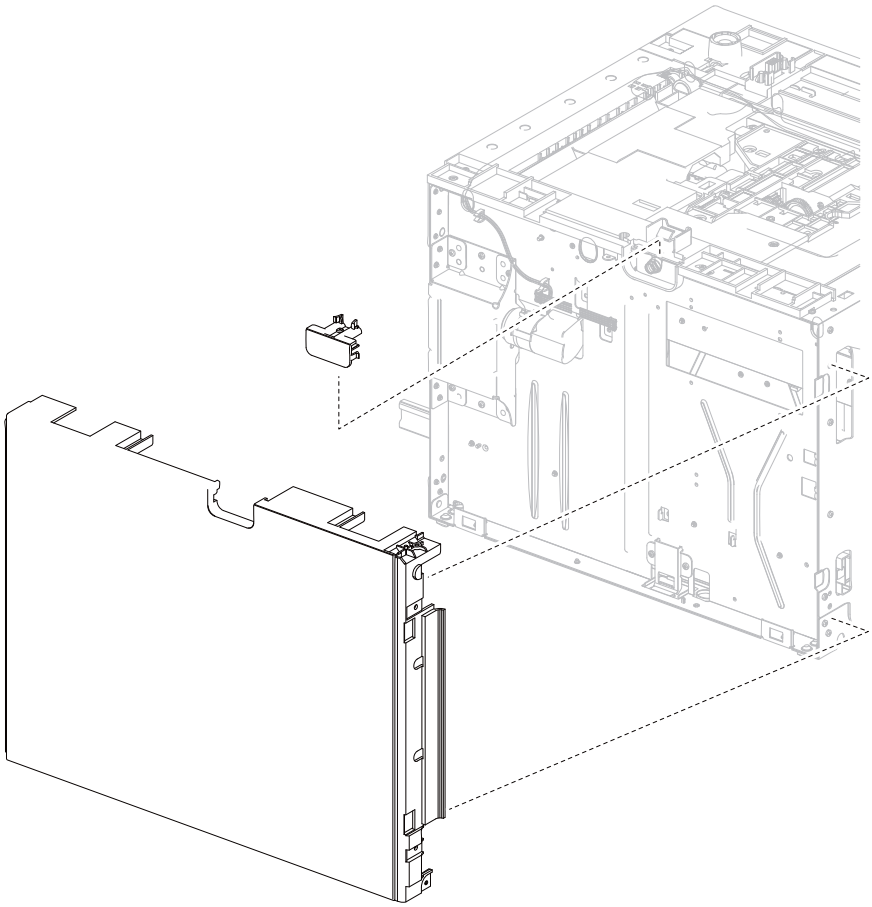

3 Remove the HCIT cover, right.

High capacity input tray (HCIT) cover, left removal

Note: Carefully remove the base machine from the HCIT tray assembly before proceeding.

Note: Before removing the HCIT left cover, first remove the left side anti-tip latch assembly. Go to **"High capacity input tray (HCIT) anti-tip latch assembly removal" on page 425**.

1 Remove the high capacity input tray (HCIT) cover, rear. Go to **"High capacity input tray (HCIT) cover, rear removal" on page 420**.

2 Remove the four screws (A) securing the HCIT cover, left to the drawer.

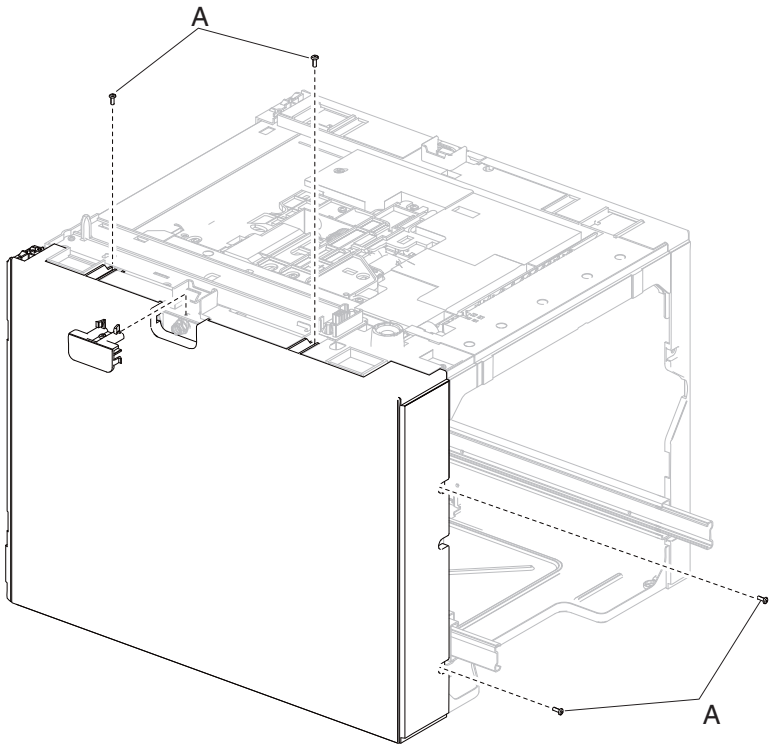

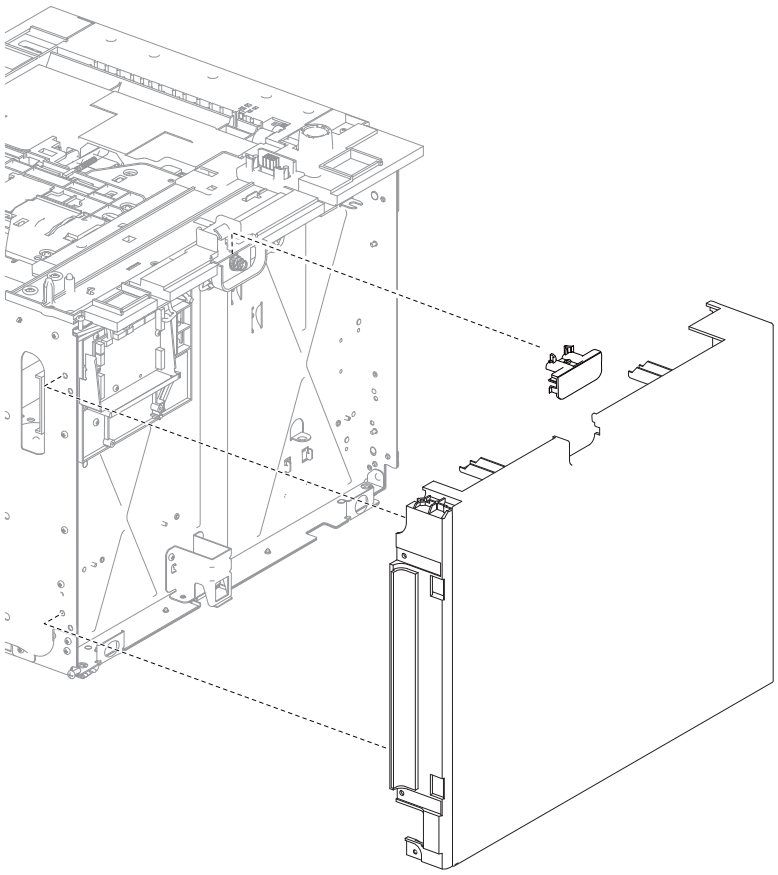

3 Remove the HCIT cover, left.

High capacity input tray (HCIT) anti-tip latch assembly removal

Note: Carefully remove the base machine from the HCIT tray assembly before proceeding. The left and right anti-tip latch assemblies are the same, and only one is in a package. The instructions below are for removing the left latch; removing the right latch has similar instructions.

1 Find the HCIT cover, left.

2 Remove the HCIT cover, left. Go to **"High capacity input tray (HCIT) cover, left removal" on page 423**.

Note: The left side anti-tip assembly will come off when removing the HCIT cover, left.

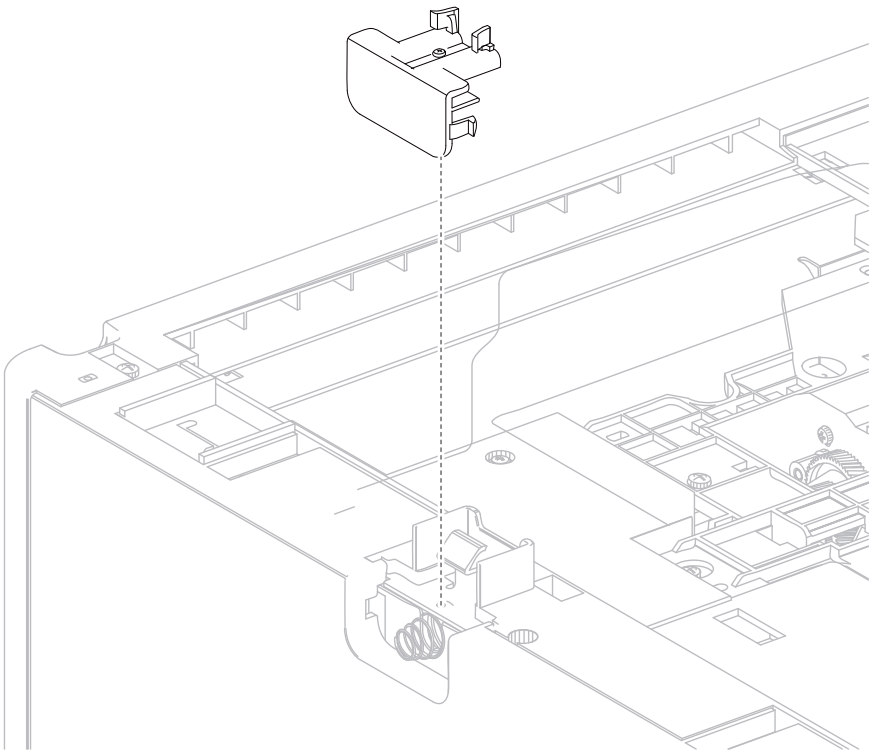

High capacity input tray (HCIT) drawer slide assembly removal

Note: The left and right drawer slide assemblies are the same, and only one is in a package. The instructions below are for removing the left slide; removing the right slide has similar instructions.

1 Remove the HCIT media tray assembly. Go to **"High capacity input tray (HCIT) media tray assembly removal" on page 417**.

2 Remove the three screws (A) securing the HCIT drawer slide to the frame of the drawer.

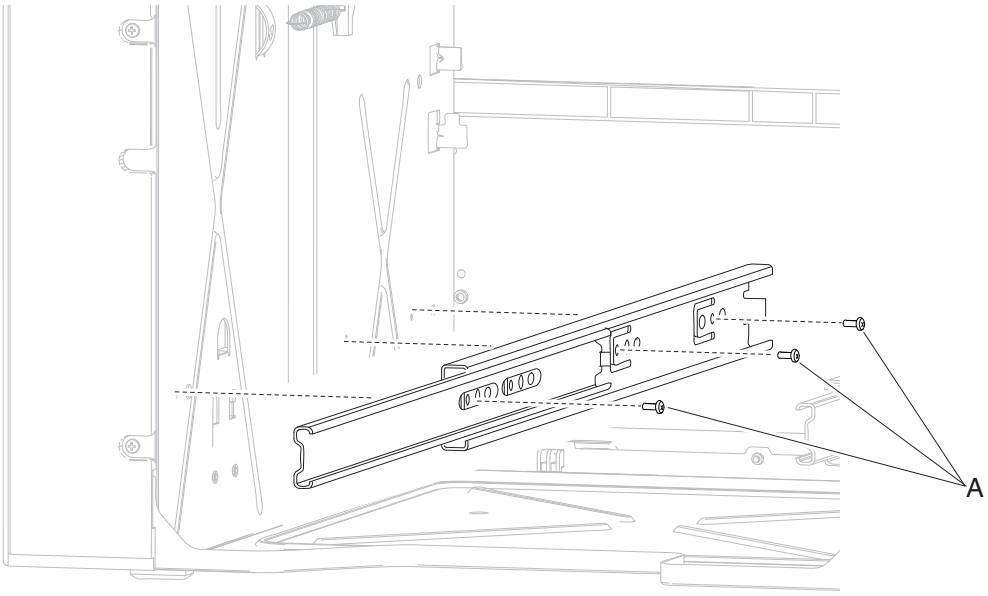

3 Remove the HCIT drawer slide.

High capacity input tray (HCIT) tray lift drive motor assembly removal

Note: Carefully remove the base machine from the HCIT tray assembly before proceeding.

1 Remove the HCIT cover, right. Go to **"High capacity input tray (HCIT) cover, right removal" on page 421**.

2 Remove the HCIT cover, left. Go to **"High capacity input tray (HCIT) cover, left removal" on page 423**.

3 Disconnect the HCIT tray lift drive motor cable connector from the HCIT controller card assembly.

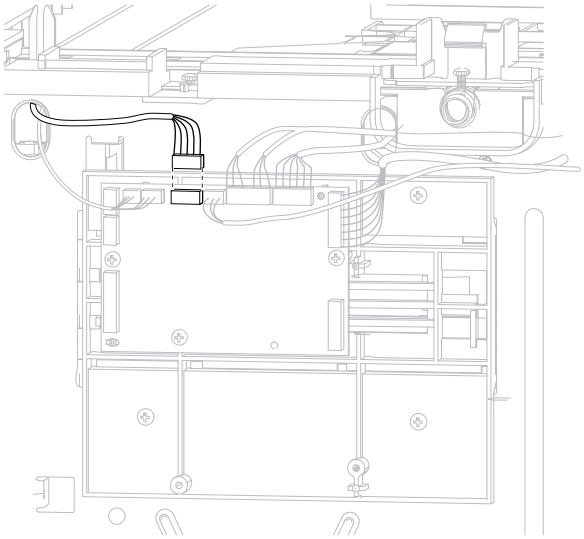

Note: Remove the cable from the restraint, and observe the routing for reinstallation.

4 Remove the eight screws (A) securing the HCIT tray lift drive motor assembly.

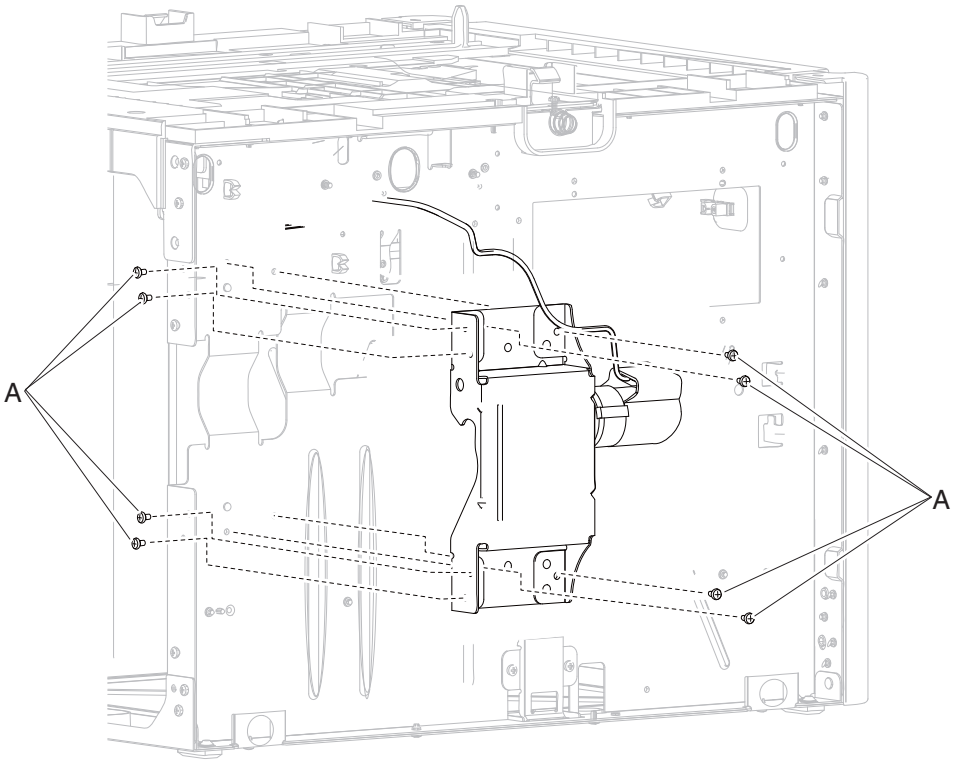

5 Remove the HCIT tray lift drive motor assembly.

High capacity input tray (HCIT) controller card assembly removal

Note: Carefully remove the base machine from the HCIT tray assembly before proceeding.

1 Remove the HCIT cover, left. Go to **"High capacity input tray (HCIT) cover, left removal" on page 423**.

2 Disconnect all connectors from the HCIT controller card assembly.

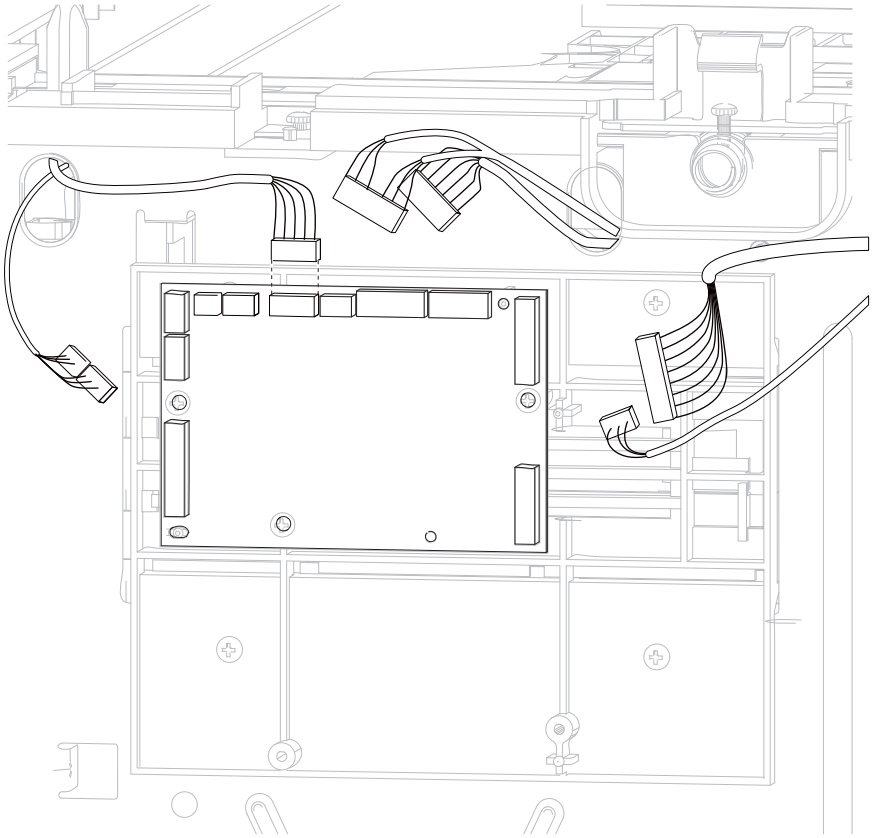

3 Remove the three screws (A) securing the HCIT controller card assembly.

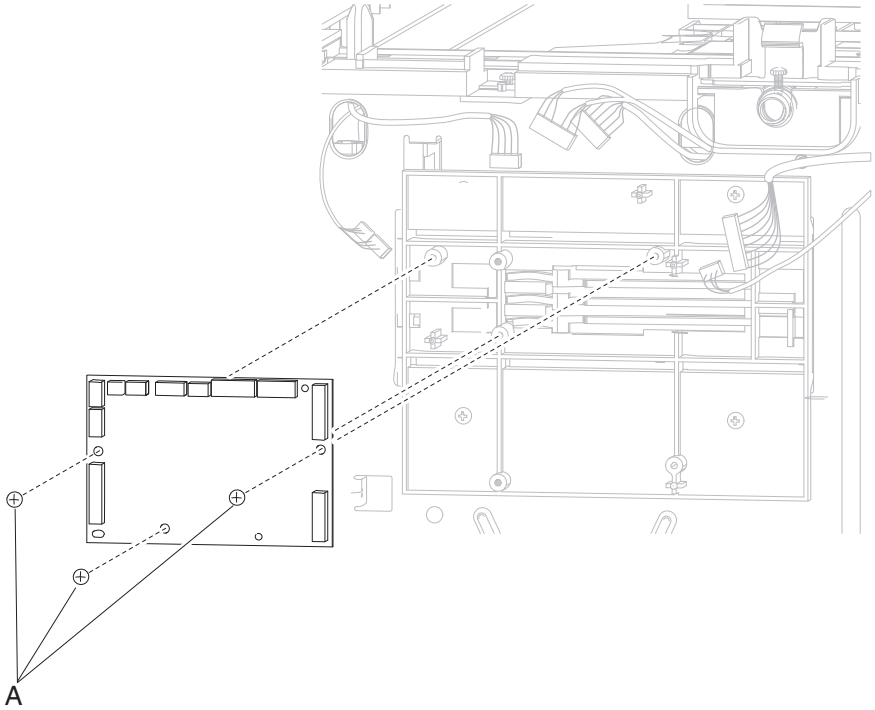

4 Remove the HCIT controller card assembly and the shield.

High capacity input tray (HCIT) media size actuator assembly removal

Note: Carefully remove the base machine from the HCIT tray assembly before proceeding.

1 Remove the HCIT controller card assembly. Go to **"High capacity input tray (HCIT) controller card assembly removal" on page 428**.

2 Disconnect the two springs (A) from the frame.

Note: Leave the springs (A) attached to the cam size sensing plate (B) and the actuator switch (C).

3 Slide the cam size sensing plate (B) through the access hole in the rear side frame.

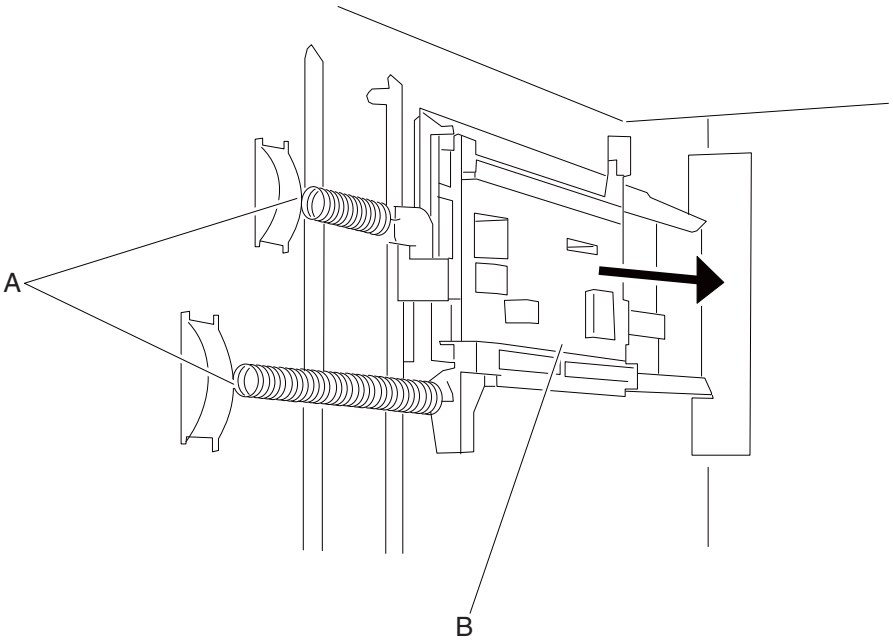

4 Snap loose the actuator switch (C) and remove.

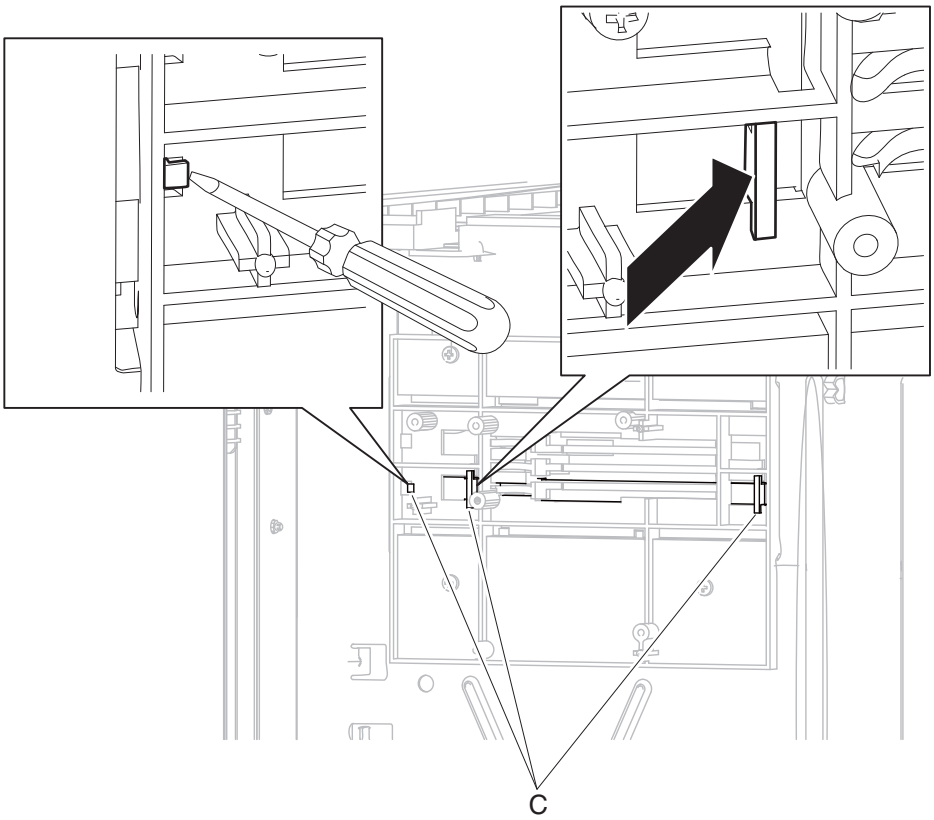

5 Remove the four screws (D) securing the card mount option with the media size actuator to the frame.

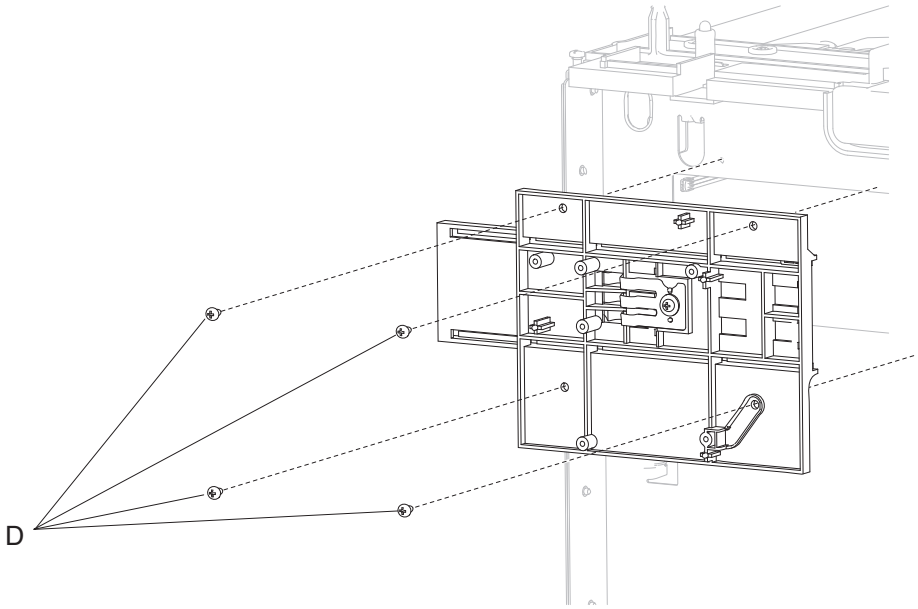

6 Remove the card mount option with the media size actuator.

Installation notes:

a Re-install the card mount option with the media size actuator to the frame by inserting the leftmost part of it through the hole, and then securing it with the four screws.

b Re-install the actuator switch with the spring to the card mount option through the drawer opening.

c Re-install the cam size sensing plate with the spring to the card mount option through the access hole in the rear side.

d Reattach the two springs to the frame.

High capacity input tray (HCIT) pick arm bracket assembly removal

Note: Carefully remove the base machine from the HCIT tray assembly before proceeding.

1 Remove the HCIT cover, left. Go to **"High capacity input tray (HCIT) cover, left removal" on page 423**.

2 Remove the HCIT pick arm bracket assembly cable connectors from the HCIT controller card assembly.

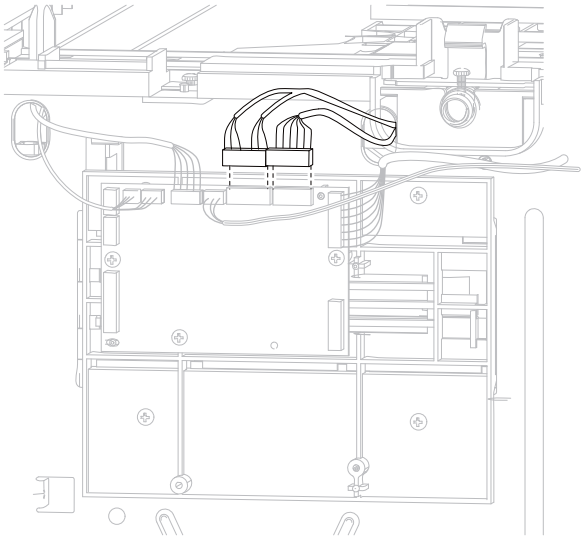

Note: Remove the cable from the restraint, and observe the routing for reinstallation.

3 Remove the pick arm lift spring from the drawer.

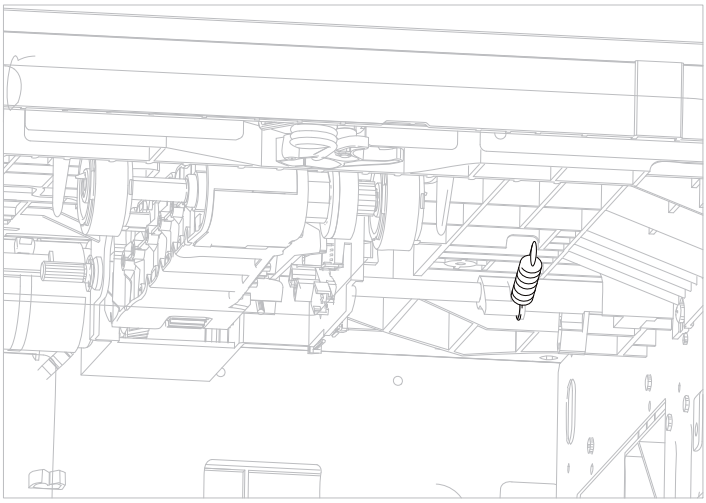

4 Remove the five screws (A) securing the HCIT pick arm bracket assembly.

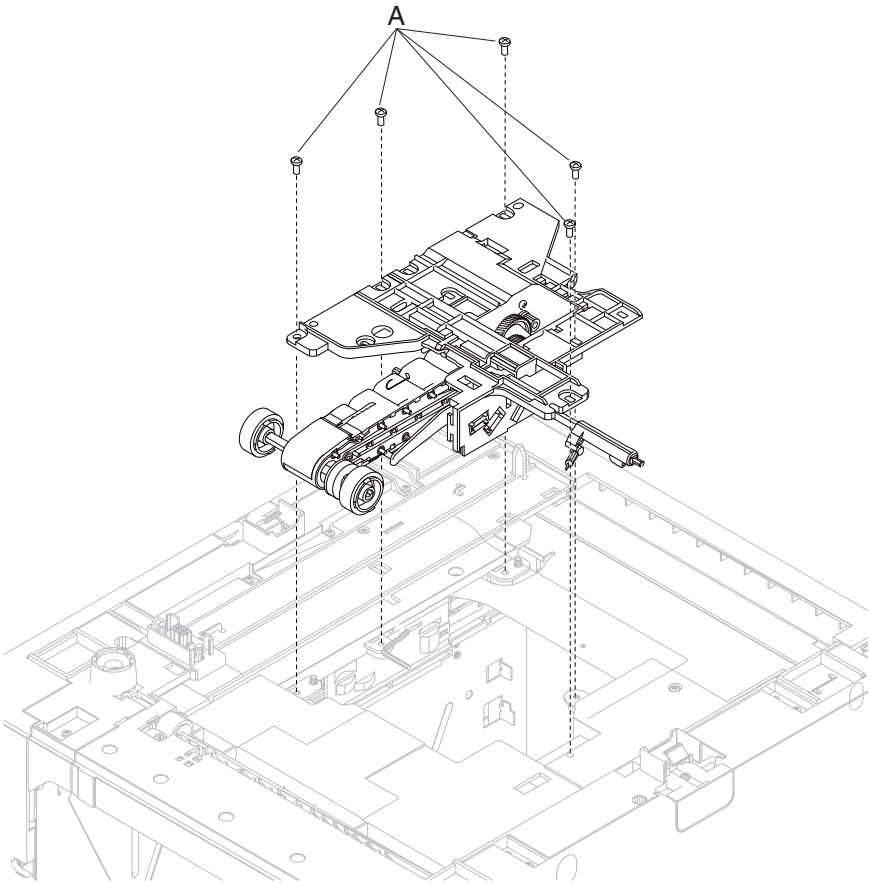

5 Remove the HCIT pick arm bracket assembly from the drawer by slightly lifting and removing it.

High capacity input tray (HCIT) tray closed latch with spring removal

The left and right tray closed latches with springs are the same, and only one is in a package. The instructions below are for removing the left latch; removing the right latch has similar instructions.

1 Remove the HCIT media tray assembly. Go to **"High capacity input tray (HCIT) media tray assembly removal" on page 417**.

2 Remove the E-clip (A) and the washer (B) with a prying tool securing the HCIT tray closed latch with spring to the left frame.

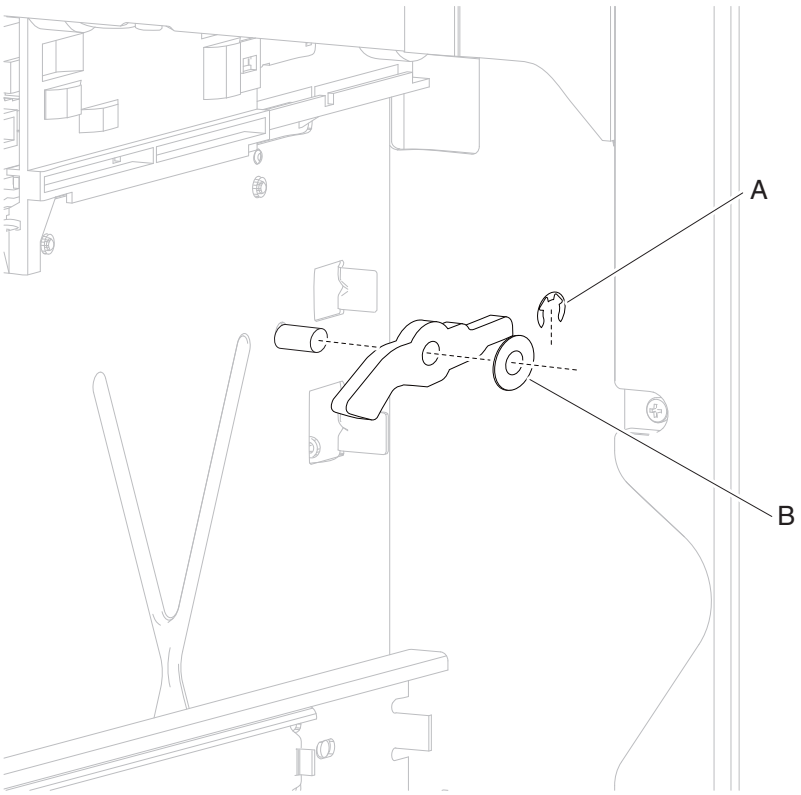

3 Remove the HCIT tray closed latch with spring.

High capacity stacker removals

High capacity stacker rear door assembly removal

1 Open the rear door assembly.

2 Remove the rear door strap by twisting vertically and pulling it out of the slot.

3 Remove the rear door assembly from the hinges by gently prying the hinges off the bosses.

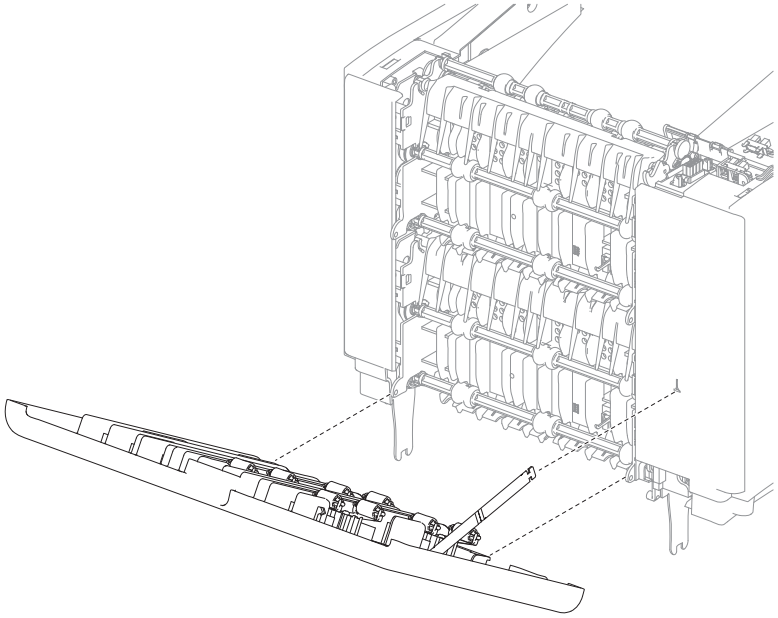

High capacity stacker right cover removal

1 Remove the high capacity stacker rear door assembly. Go to **"High capacity stacker rear door assembly removal" on page 434**.

2 Using a #1 phillips screwdriver, remove the three screws (A) securing the right cover to the high capacity stacker assembly.

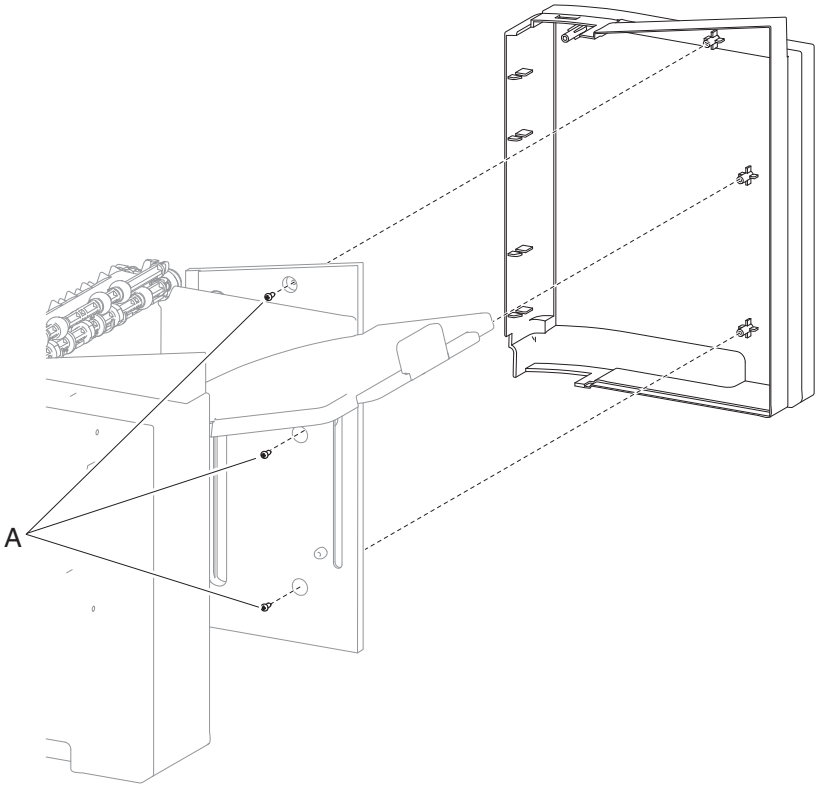

3 Remove the right cover.

High capacity stacker left cover removal

1 Remove the high capacity stacker rear door assembly. Go to **"High capacity stacker rear door assembly removal" on page 434**.

2 Using a #1 phillips screwdriver, remove the three screws (A) securing the left cover to the high capacity stacker assembly.

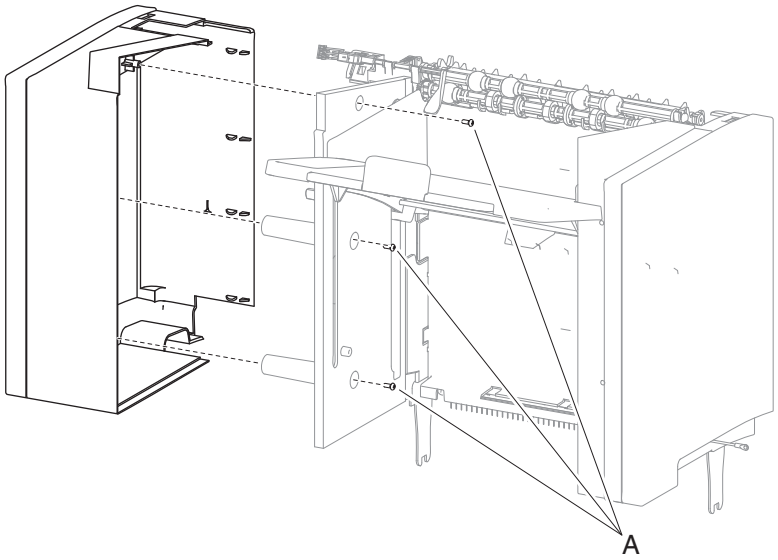

3 Remove the left cover.

High capacity stacker media output bin assembly removal

1 Remove both the high capacity stacker media output bin recoil springs.

2 Remove the high capacity stacker standard output bin LED.

3 Carefully spread the left side of the high capacity stacker assembly and maneuver the media output bin from the assembly.

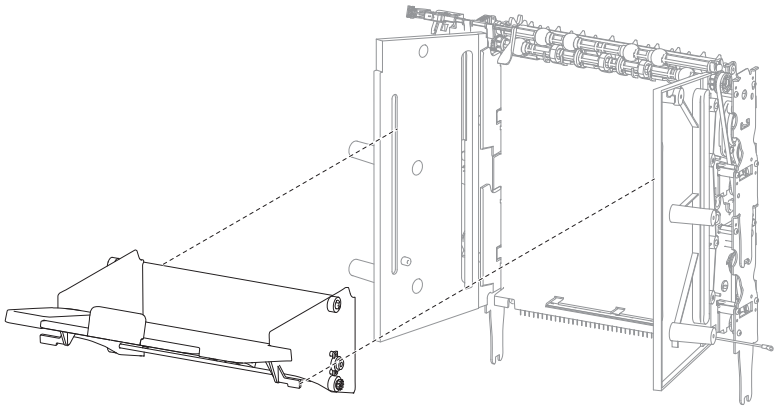

High capacity stacker controller card cover panel removal

1. Remove the media output bin assembly. Go to **“High capacity stacker rear door assembly removal” on page 434**.
2. Remove the two screws (A) securing the controller card cover panel on the rear of the assembly.
3. Remove the screw (B) securing the ground strap to the right frame.
4. Flex the controller card cover panel by grasping the bottom middle of the panel and lifting it, releasing the tabs (C) from the left and right frame.

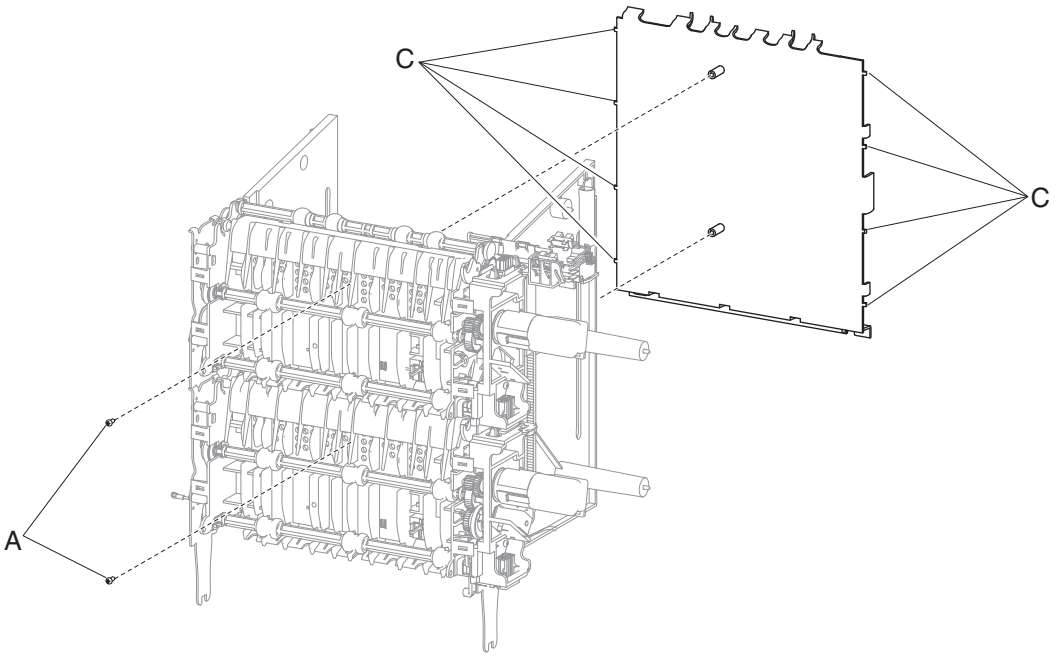

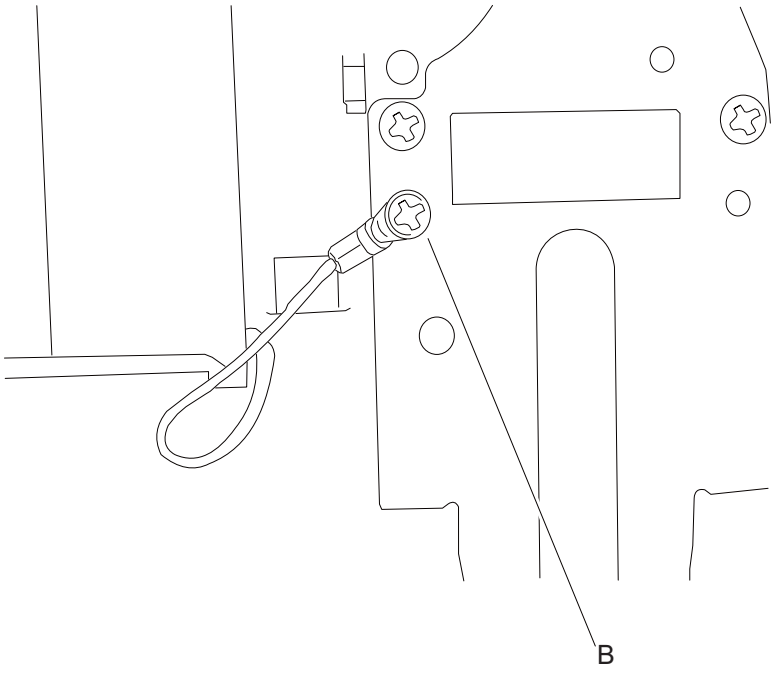

High capacity stacker switch (media bin HP) removal

1 Remove the high capacity stacker controller card cover panel. Go to **"High capacity stacker controller card cover panel removal" on page 437**.

2 Remove the two screws (A) securing the high capacity stacker switch (media bin HP) to the left frame.

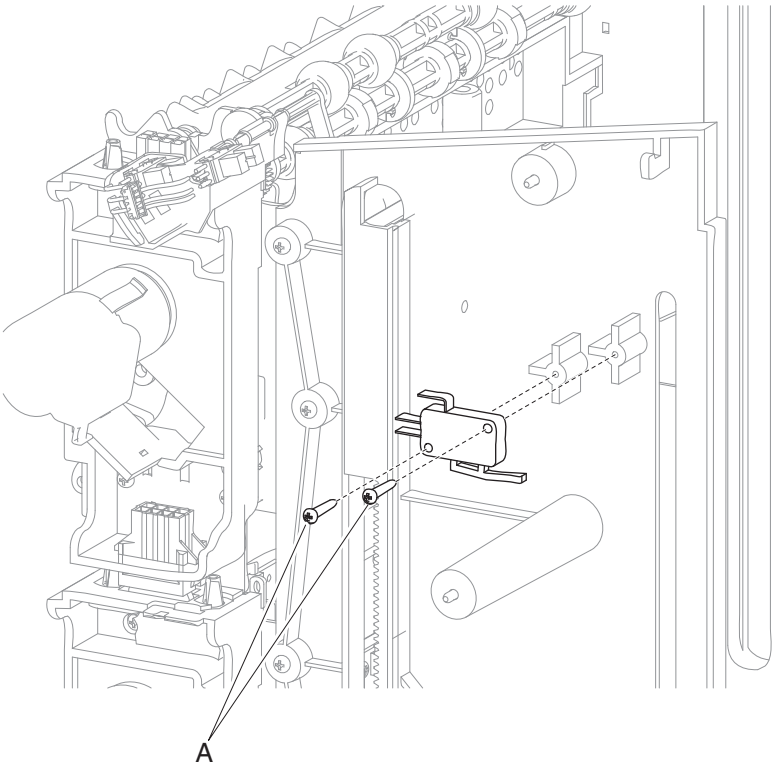

3 Disconnect the high capacity stacker switch (media bin HP) harness from the upper controller card.

4 Remove the high capacity stacker switch (media bin HP).

High capacity stacker sensor (media bin full) assembly removal

1 Remove the high capacity stacker controller card cover panel. Go to **"High capacity stacker controller card cover panel removal" on page 437**.

2 Release the tabs securing the high capacity stacker sensor (media bin full) assembly to the left frame.

3 Disconnect the sensor (media bin full) harness from the upper controller card.

4 Remove the high capacity stacker sensor (media bin full) assembly.

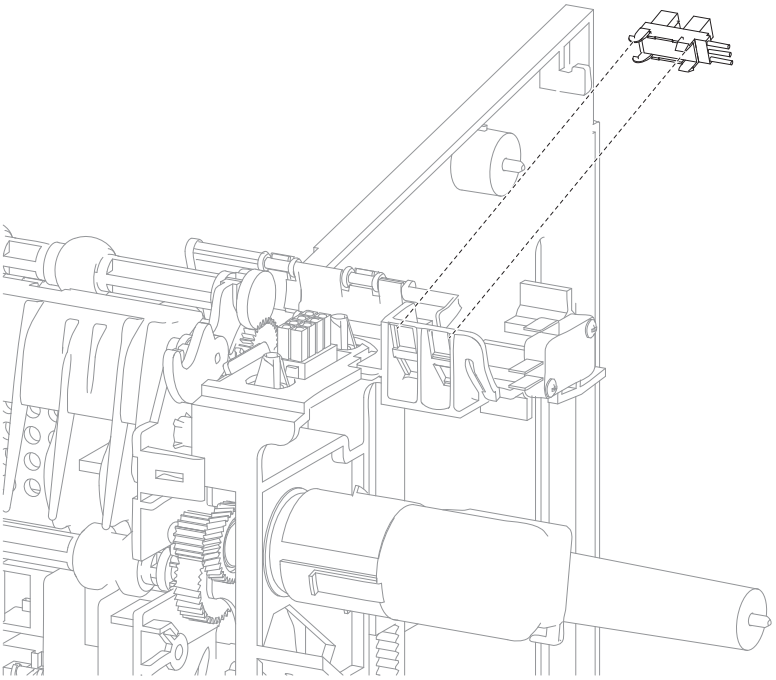

High capacity stacker sensor (media bin full) bracket assembly removal

1 Remove the high capacity stacker left cover. Go to **"High capacity stacker left cover removal" on page 436**.

2 Release the tab securing the bracket to the left frame.

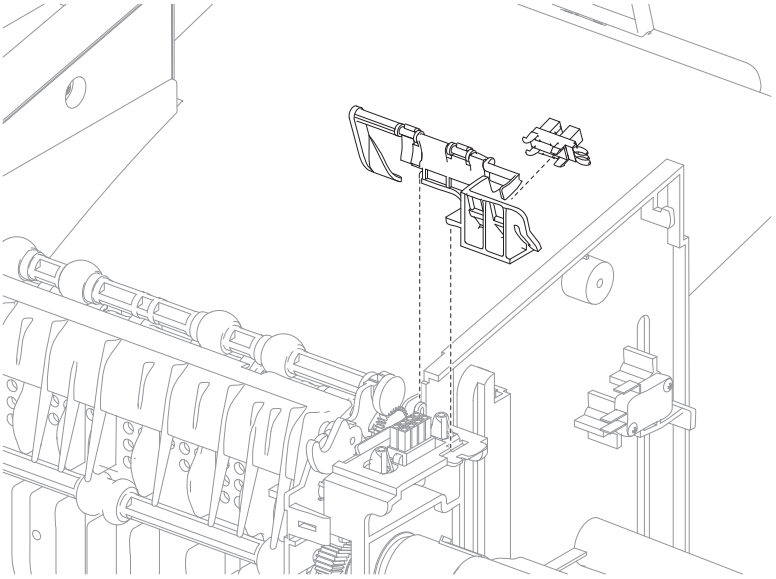

3 Remove the bracket from the frame and disconnect the sensor (media bin full) and media bin full actuator.

High capacity stacker controller card assembly (upper and lower) removal

1 Remove the high capacity stacker controller card cover panel. Go to **"High capacity stacker controller card cover panel removal" on page 437**.

2 Disconnect the harnesses from the controller card.

Note: Pay careful attention to where the power input and output harnesses are attached.

3 Remove the two screws (A) securing the high capacity stacker controller card assembly and remove the card.

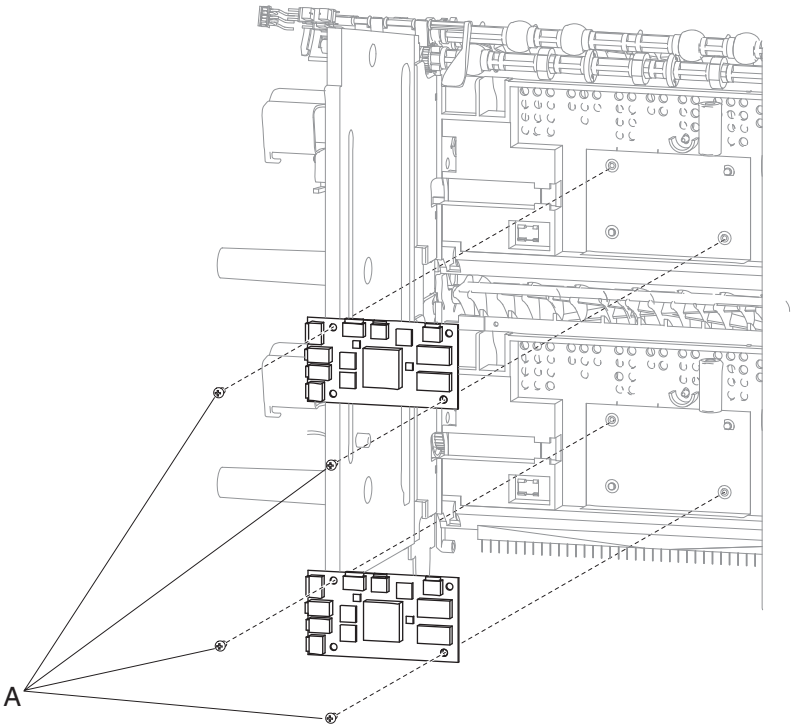

High capacity stacker right frame removal

1 Remove the right media output bin recoil spring.

2 Remove the four screws (A) securing the right frame to the high capacity stacker assembly.

3 Carefully remove the right frame.

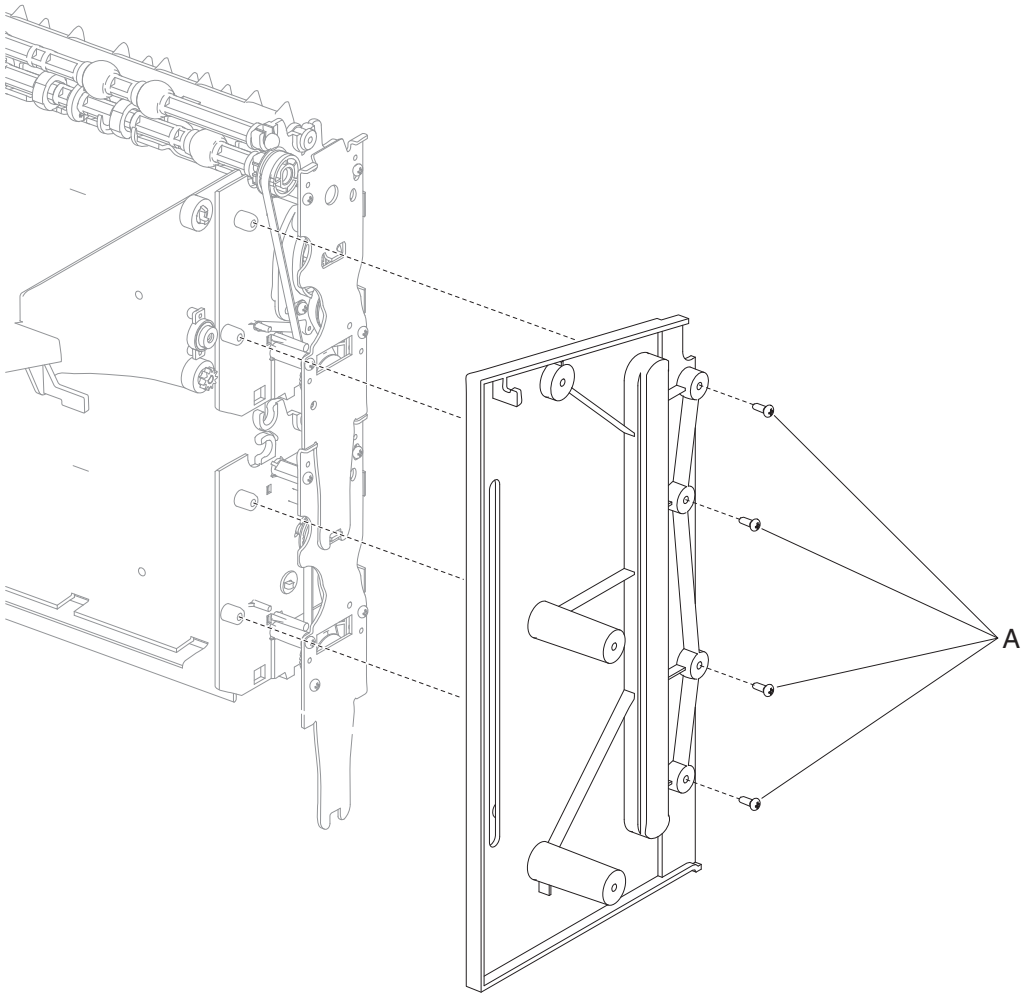

Note: When installing the right frame, make sure the media output bin assembly is aligned properly.

High capacity stacker left frame removal

1 Remove the left media output bin recoil spring.

2 Remove the two screws (A) securing the switch (media bin HP) to the left frame.

3 Remove the high capacity stacker standard output bin LED.

4 Remove the four screws (B) securing the left frame to the high capacity stacker assembly.

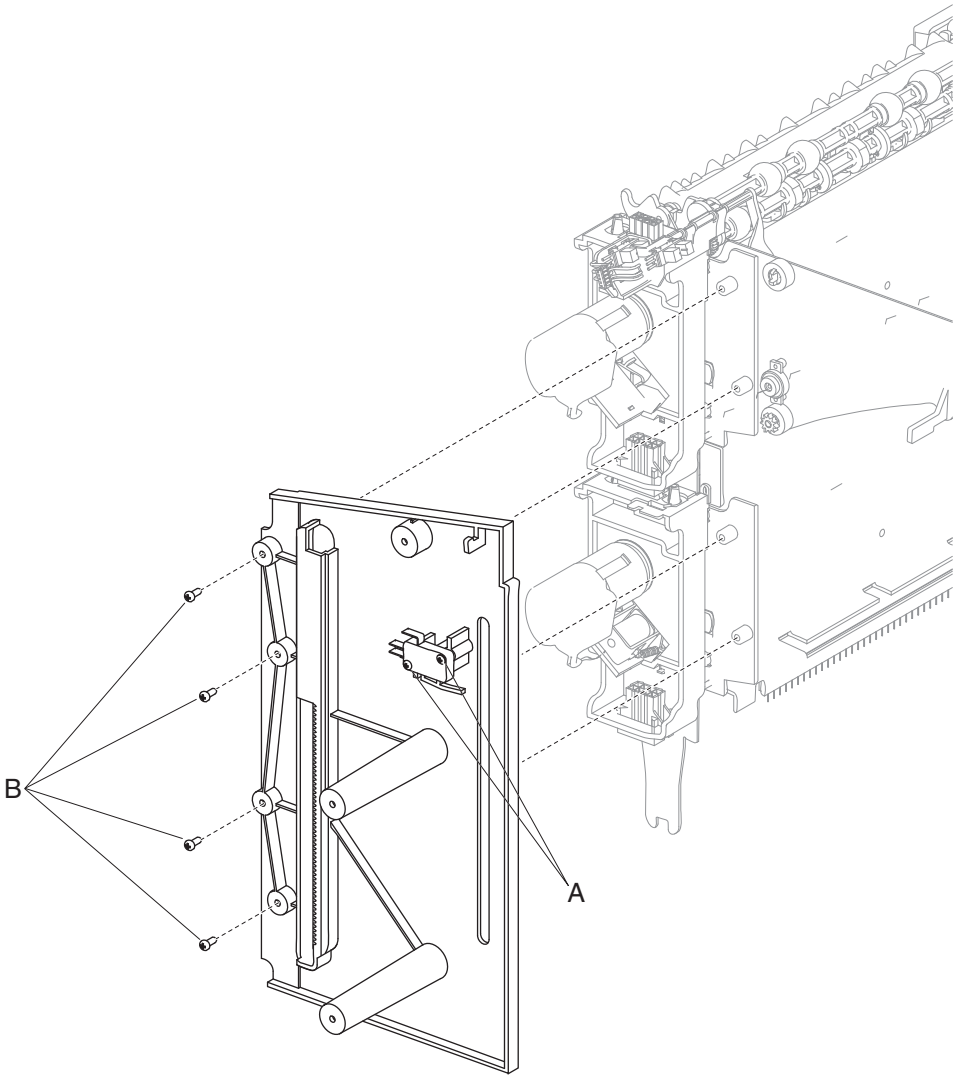

5 Carefully remove the left frame.

Note: When installing the left frame, make sure the media output bin assembly is aligned properly.

High capacity stacker upper deflector gate removal

1 Remove the rear door assembly. Go to **“High capacity stacker rear door assembly removal” on page 434**.

2 With a spring hook, carefully remove the upper deflector gate spring and for ease of reassembly, temporarily hook the spring to the upper frame tab.

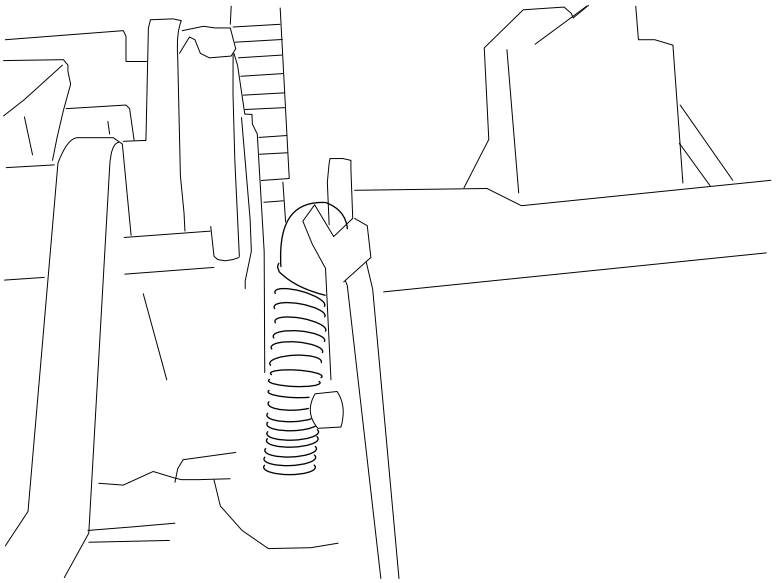

3 Unsnap each side of the deflector gate and remove.

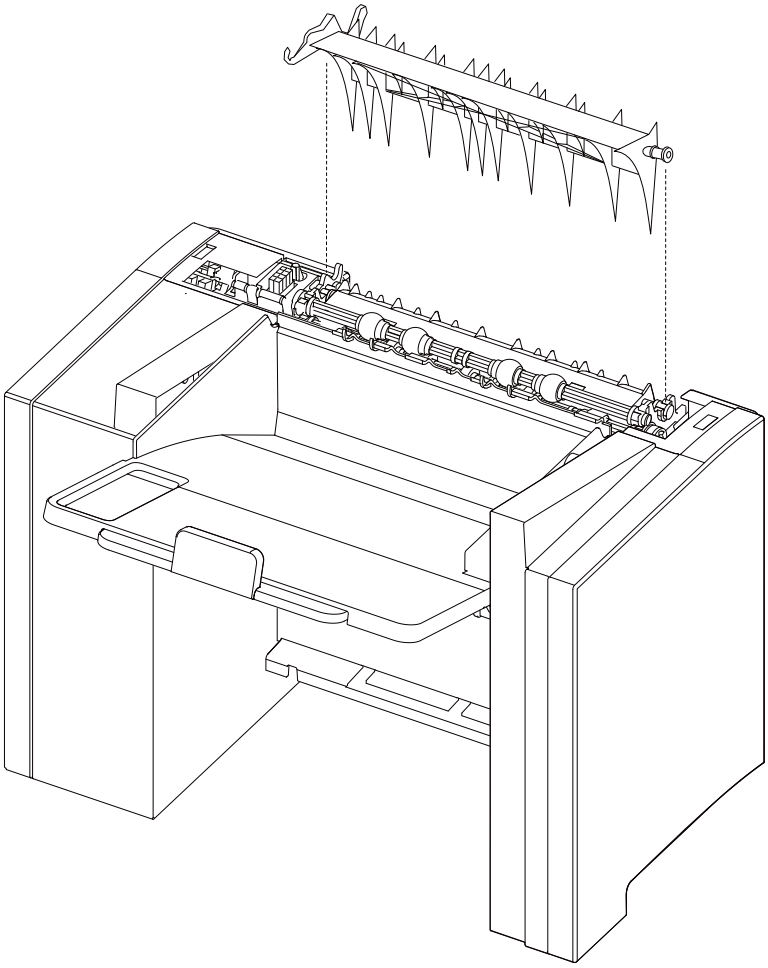

Sensor (high capacity stacker pass through) removal

1 Remove the rear door assembly. Go to **"High capacity stacker rear door assembly removal" on page 434**.

2 Using needle-nose pliers or your finger, pull out and downward on the sensor (pass through) until the sensor unsnaps.

3 Remove the high capacity controller card cover panel. Go to **"High capacity stacker controller card cover panel removal" on page 437**.

4 Disconnect the sensor (pass through) harness from the controller card and remove the sensor.

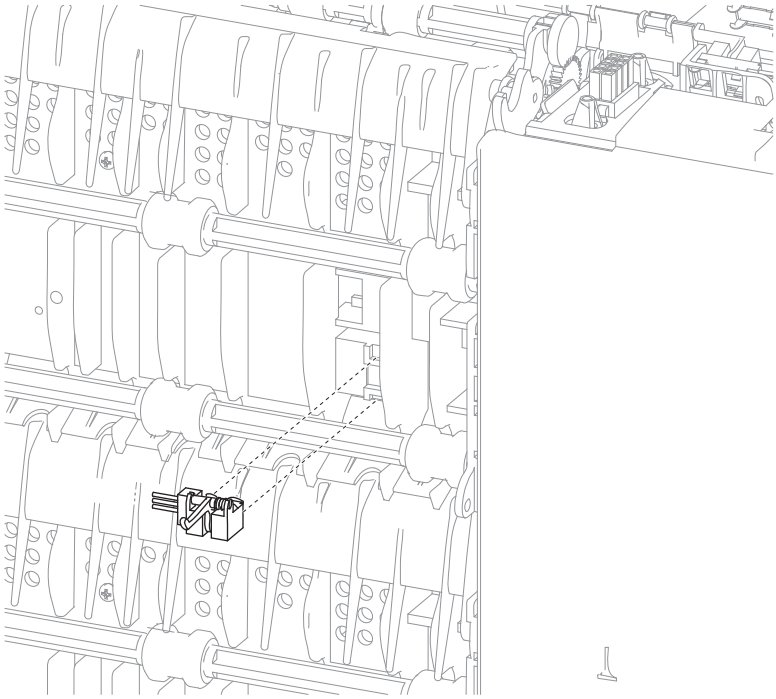

High capacity stacker left mounting bracket removal

1 Remove the high capacity stacker left cover. Go to **"High capacity stacker left cover removal" on page 436**.

2 Remove the eight screws (A) securing the high capacity stacker left mounting bracket.

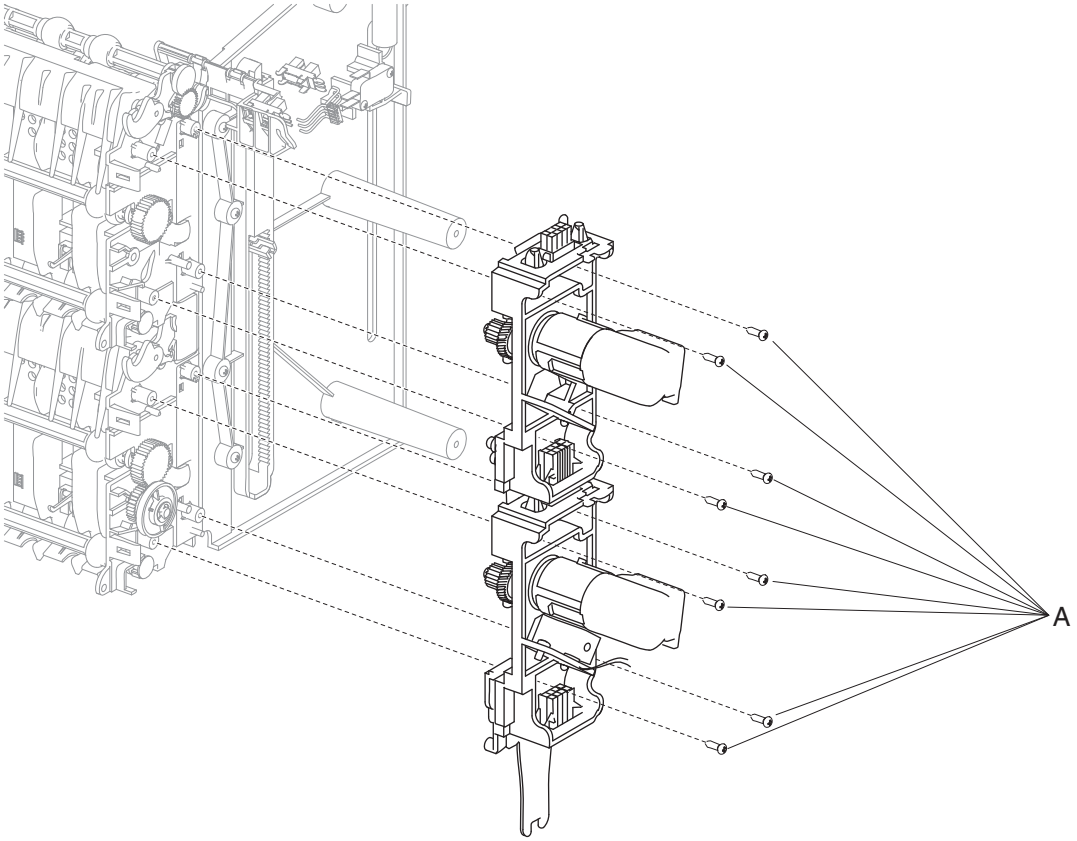

3 Pull the bracket up and let it rest on the assembly with the cables intact.

Sensor (high capacity stacker deflector gate HP) removal

1 Remove the high capacity stacker left mounting bracket. Go to **"High capacity stacker left mounting bracket removal" on page 446**.

2 Remove the harness from the sensor.

3 Unclip the sensor tabs and remove.

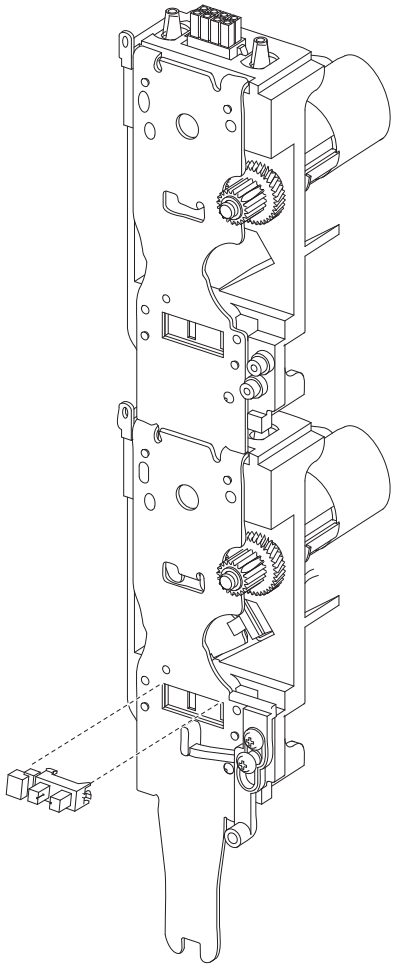

Offset stacker removals

Offset stacker rear door assembly removal

1 Open the rear door assembly.

2 Force the left hinge out of the slot by pushing the door to the right.

3 Once the left hinge has been disengaged, pull the right hinge out.

4 Remove the offset stacker rear door assembly.

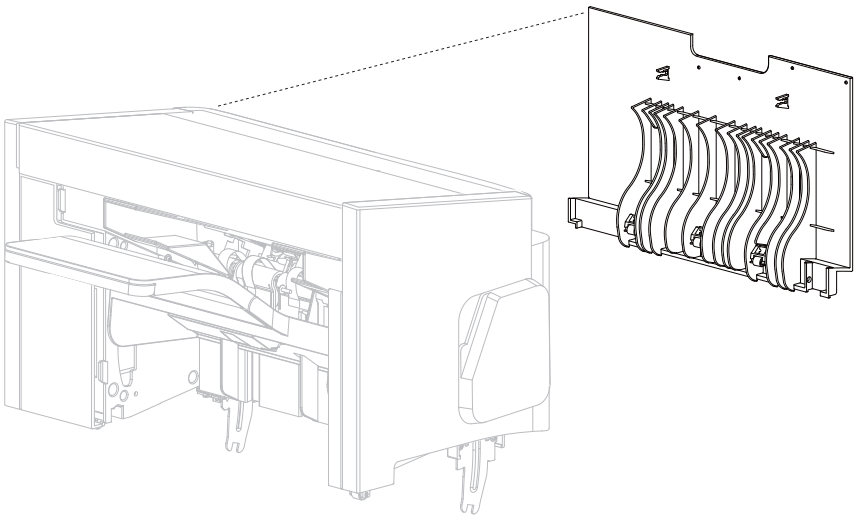

Offset stacker right cover removal

1 Remove the two screws (A) on the inside of the exit bin compartment securing the right cover.

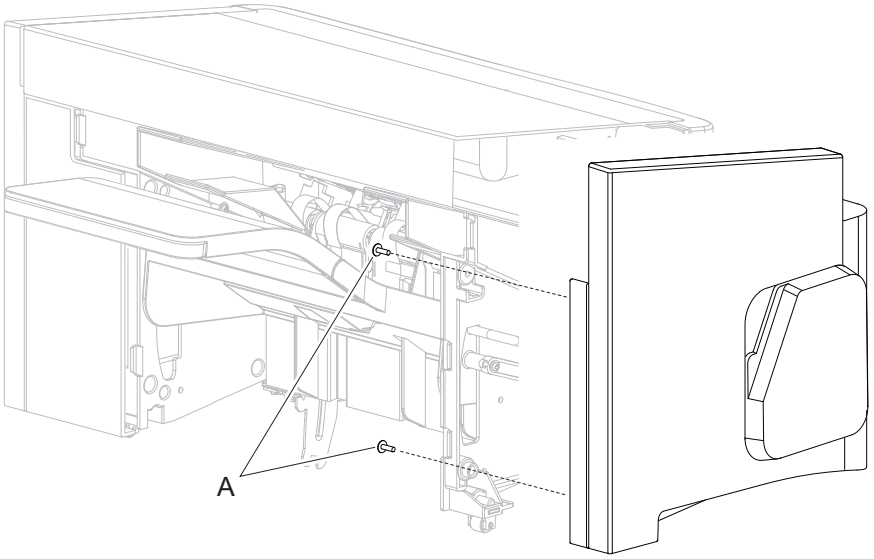

2 Pull out on the front side of the right cover to disengage the tabs.

3 Remove the offset stacker right cover.

Offset stacker left cover removal

1 Remove the two screws (A) on the inside of the exit bin compartment securing the left cover.

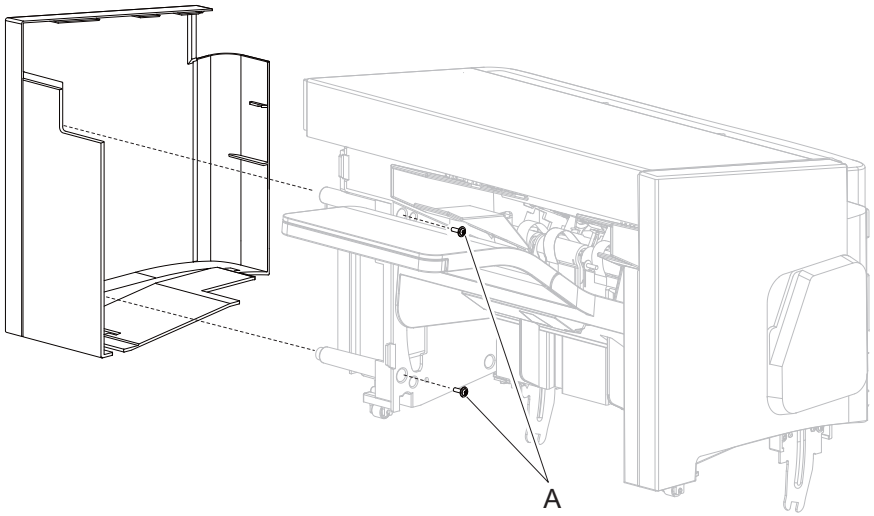

2 Pull out on the front side of the left cover to disengage the tabs.

3 Remove the offset stacker left cover.

MFP stapler assembly top cover removal

1 Remove the left and right covers. Go to **"Offset stacker left cover removal" on page 449** and **"Offset stacker right cover removal" on page 448**.

2 Remove the screw (A) on each side of the top cover.

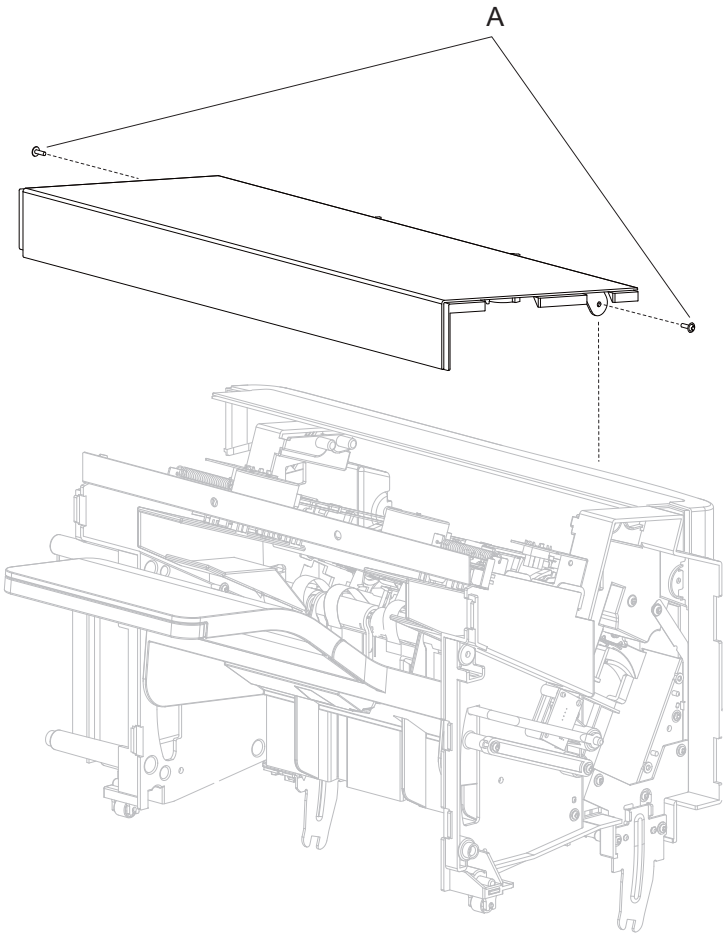

3 Pull up and toward the front to remove the offset stacker top cover.

Offset stacker handle cover removal

1 Remove the left and right covers. Go to **“Offset stacker left cover removal” on page 449** and **“Offset stacker right cover removal” on page 448**.

2 Remove the screw (A) on each side of the handle cover.

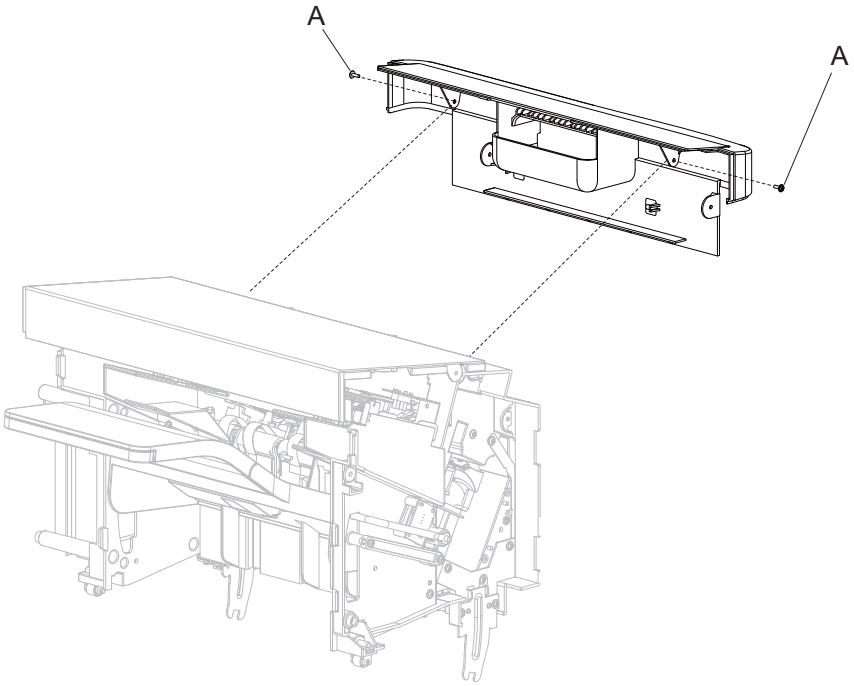

3 Lift up and to the rear to remove the cover.

Offset stacker LED sensor cover removal

1 Remove the screw (A) securing the LED sensor cover to the underside of the output bin.

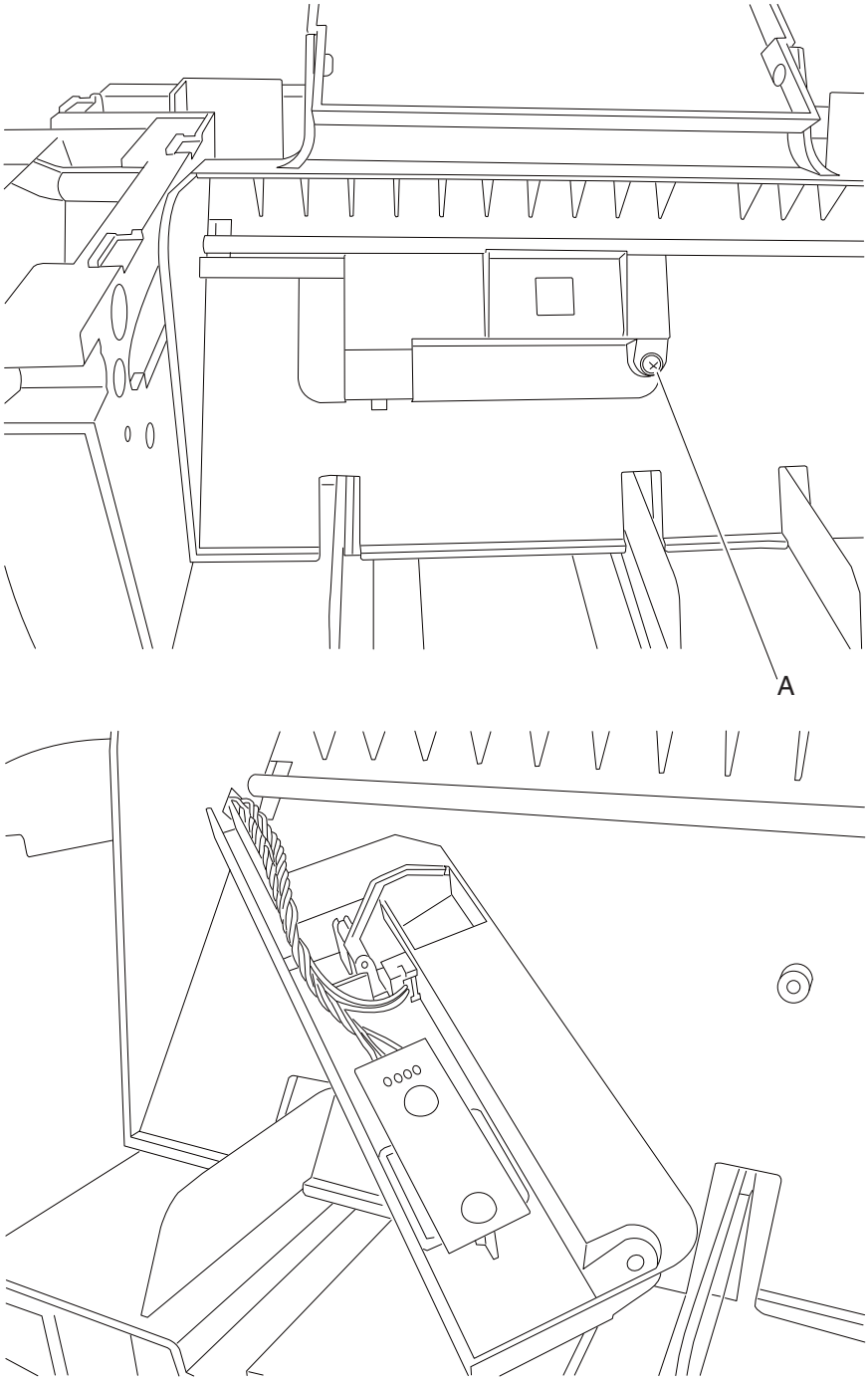

2 Remove the standard output bin LED. Go to **"Offset stacker standard output bin LED and LED clear lens removal" on page 454**.

3 Remove the sensor (finisher media bin present). Go to **"Sensor (offset stacker finisher media bin present) removal" on page 453**.

4 Remove the LED sensor cover.

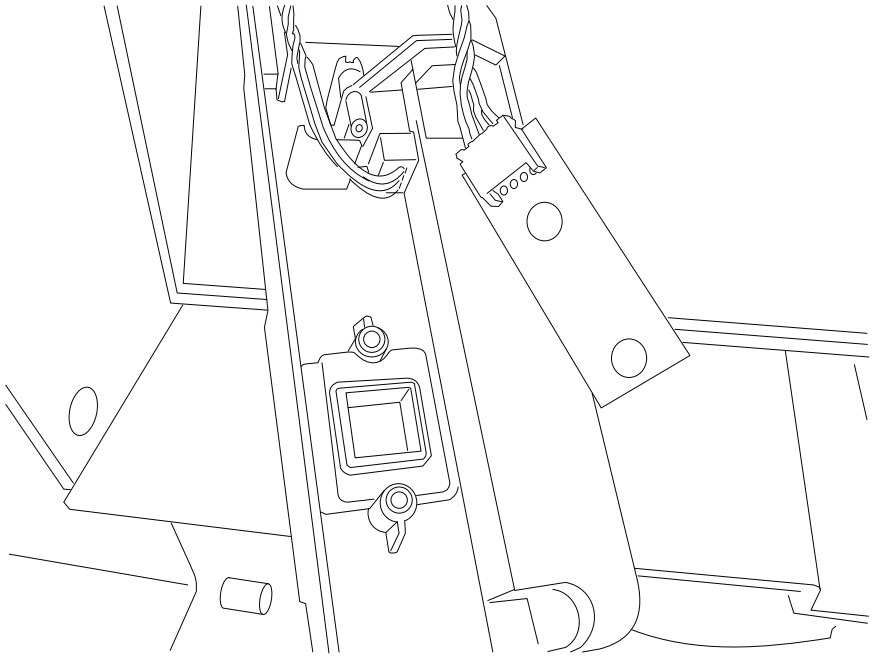

Sensor (offset stacker finisher media bin present) removal

1 Remove the offset stacker LED sensor cover. Go to **"Offset stacker LED sensor cover removal" on page 452**.

2 Using a flat-blade screwdriver, release the tabs (A) on the sensor and remove it from the sensor cover.

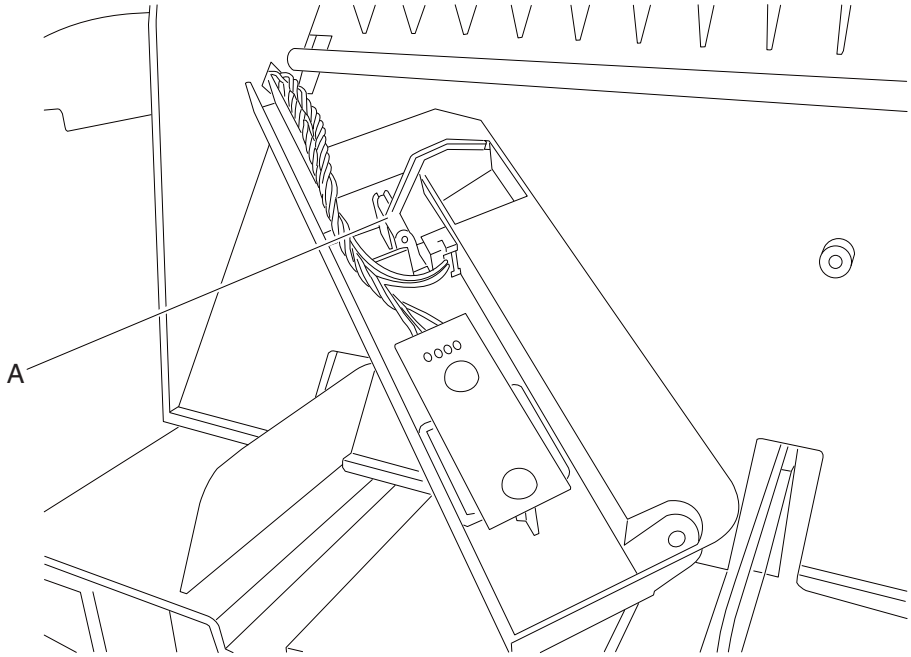

3 Remove the harness connected to the sensor (offset stacker finisher media bin present).

4 Remove the offset stacker sensor (offset stacker finisher media bin present).

Offset stacker standard output bin LED and LED clear lens removal

1 Remove the offset stacker LED sensor cover. Go to **"Offset stacker LED sensor cover removal" on page 452**.

2 Remove the two screws (A) securing the LED to the cover.

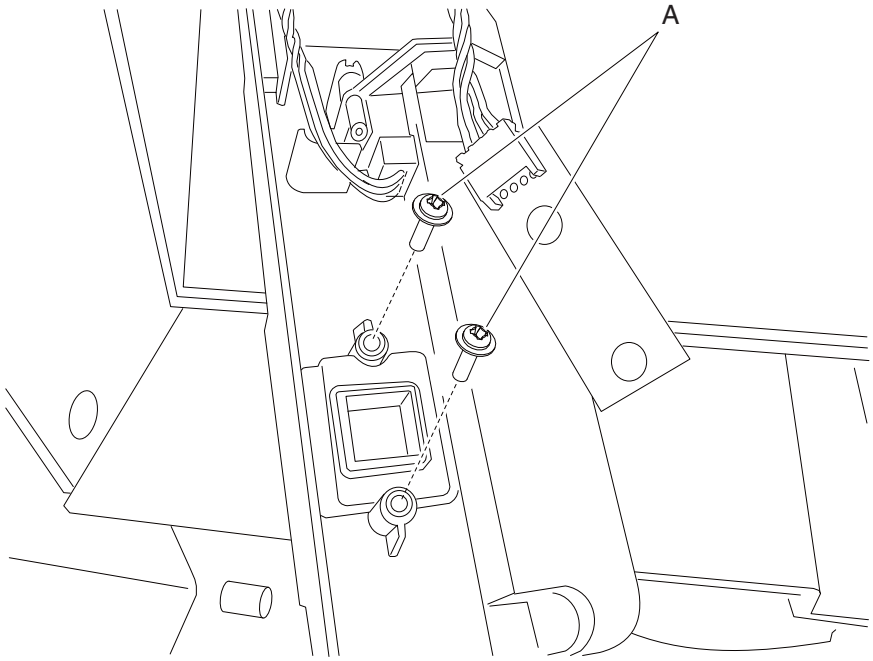

3 Remove the LED and disconnect the harness.

4 Remove the LED clear lens.

Offset stacker tamper drive belt removal

1 Remove the offset stacker tamper recoil spring.

2 Pull the belt out the tamper belt holder and remove the belt from the pulley.

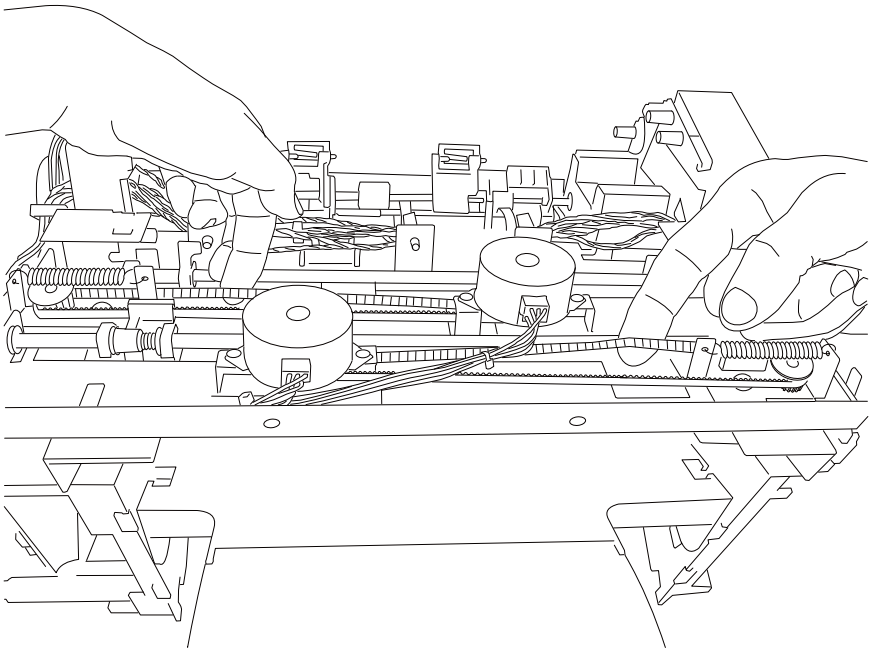

Offset stacker tamper drive motor assembly removal

1 Remove the offset stacker top cover. Go to **"MFP stapler assembly top cover removal" on page 450**.

2 Pull slack in the tamper drive belt and remove the belt from the tamper drive belt pulley.

3 Disconnect the tamper driver motor harness from the controller card.

4 Remove the two screws (A) securing the tamper drive motor assembly to the tamper frame.

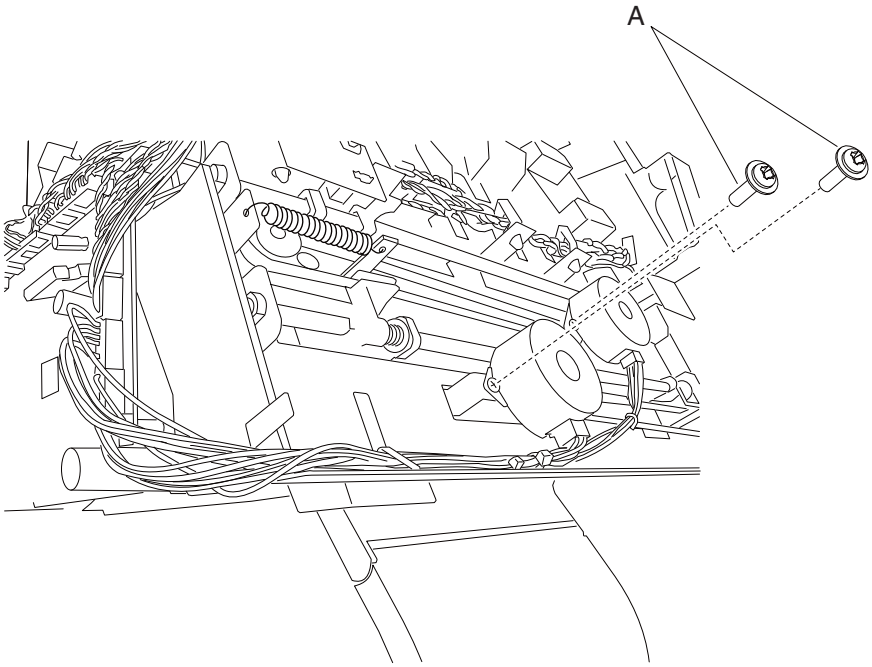

5 Remove the tamper drive motor assembly.

Offset stacker media stack flap and media stack flap actuator removal

1 Remove the offset stacker handle cover. Go to **"Offset stacker handle cover removal" on page 451**.

2 Release the locking tab and slide the media stack flap actuator to the right and remove.

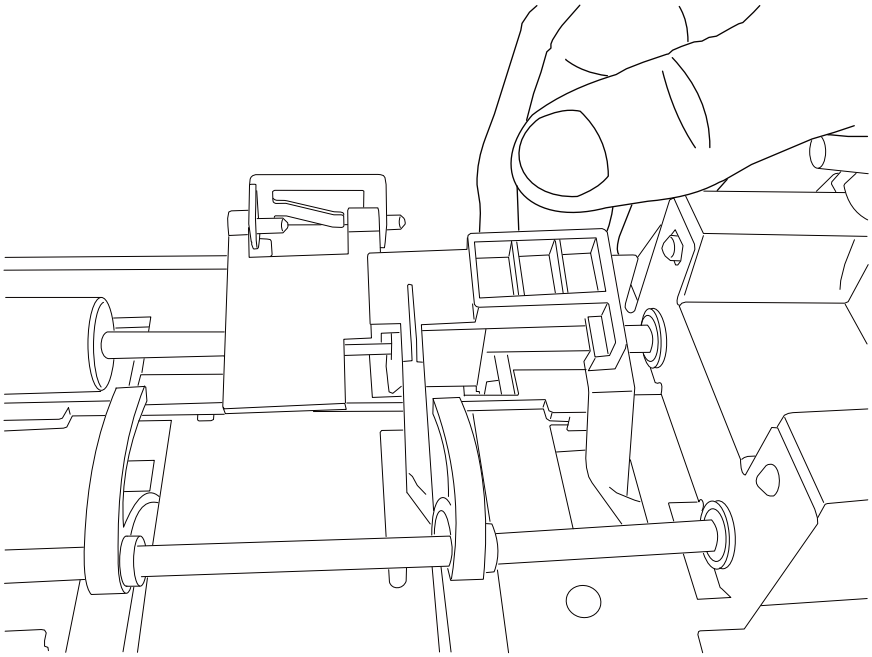

Offset stacker paddle drive motor assembly removal

1 Remove the left cover. Go to **“Offset stacker left cover removal” on page 449**.

2 Disconnect the paddle motor harness from the controller card.

3 Remove the cable from the harness clip.

4 Remove the two screws (A) securing the two paddle drive motor assemblies.

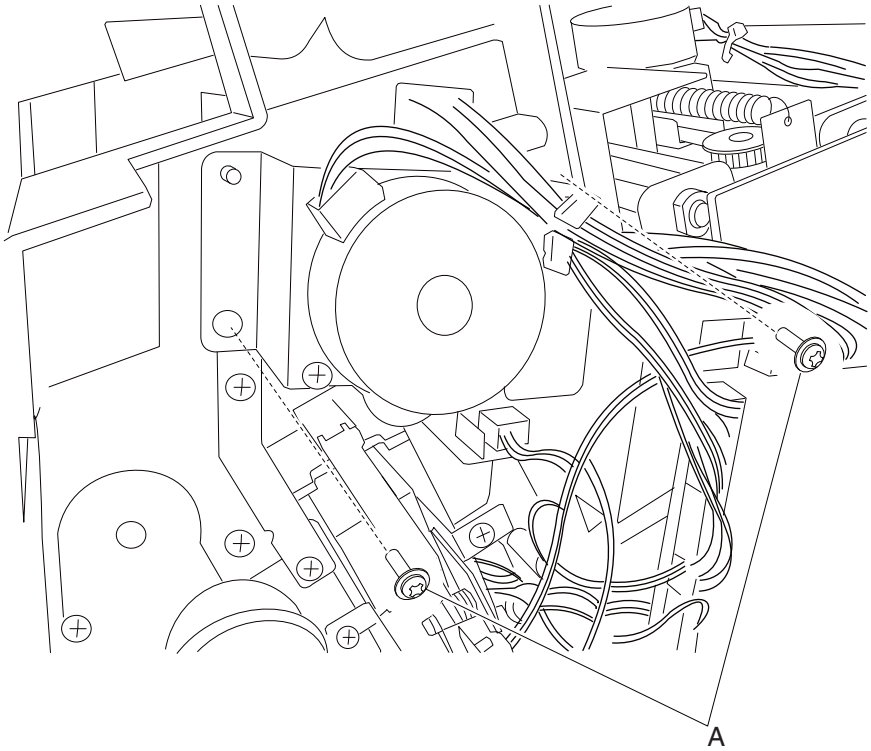

5 Remove the paddle drive motor assembly.

Sensor (offset stacker media stack) removal

1 Remove the offset stacker top cover. Go to **"MFP stapler assembly top cover removal" on page 450**.

2 Disconnect the harness to the sensor (media stack).

3 Using your fingers, pinch tab (A) securing the offset stacker sensor (media stack) and remove.

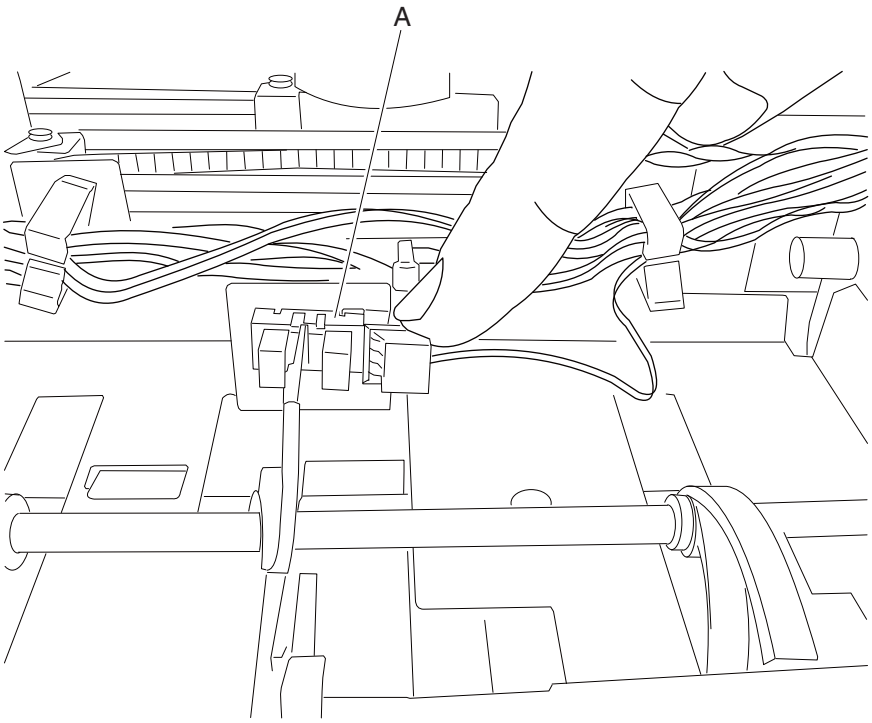

Sensor (offset stacker paddle HP) removal

1 Remove the offset stacker left cover. Go to **"Offset stacker left cover removal" on page 449**.

2 Disconnect the harness to the sensor (offset stacker paddle home position).

3 Using your fingers, pinch tab (A) securing the sensor (offset stacker paddle home position) and remove.

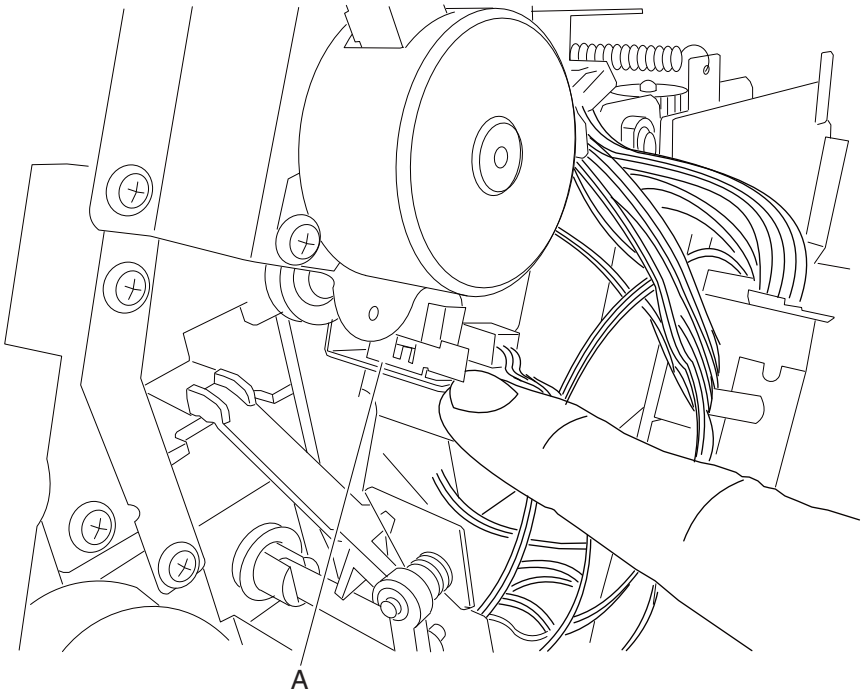

Sensor (offset stacker tamper HP left and right) removal

1 Remove the offset stacker top cover. Go to **“MFP stapler assembly top cover removal” on page 450**.

2 Disconnect the harness to the sensor (offset stacker tamper HP left and right).

3 Using your fingers, pinch the tabs (A) securing the staple finisher sensor (tamper HP left and right) and remove.

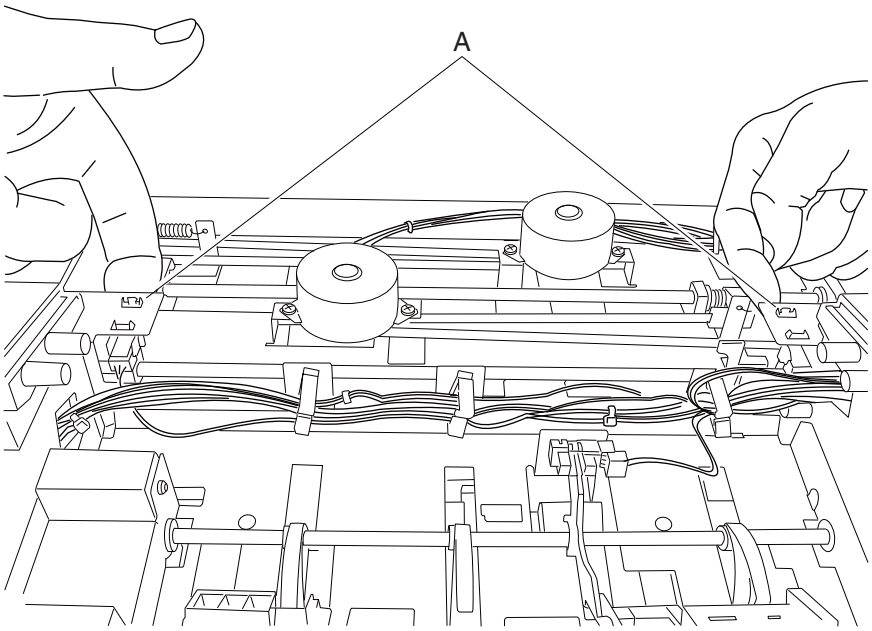

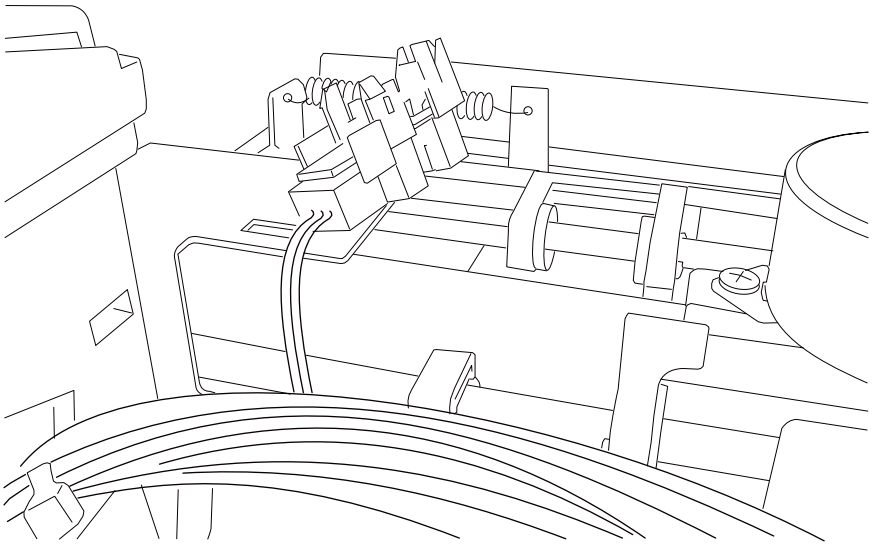

Sensor (offset stacker bin full send) removal

1 Remove the stapler/stacker controller card assembly. Go to **“Stapler/stacker controller card assembly removal” on page 463**.

2 Remove the two screws (A) securing the staple finisher sensor (bin full send).

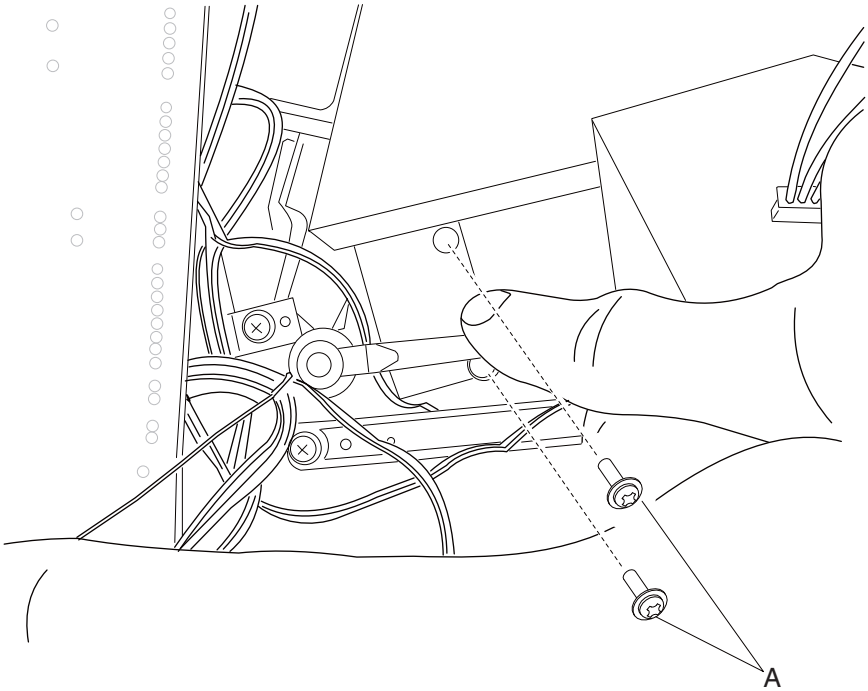

3 Disconnect the harness and remove.

Sensor (offset stacker bin full receive) removal

1 Remove the offset stacker right cover. Go to **"Offset stacker right cover removal" on page 448**.

2 Remove the two screws (A) securing the sensor (bin full receive).

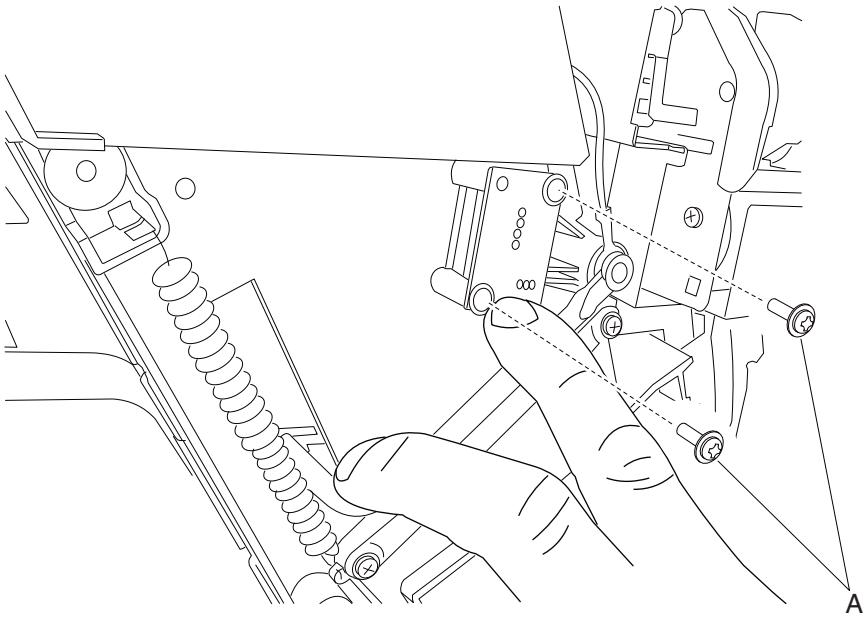

3 Disconnect the harness and remove.

Sensor (offset stacker deflector HP) removal

1 Remove the offset stacker left cover. Go to **"Offset stacker left cover removal" on page 449**.

2 Disconnect the harness to the sensor (deflector HP).

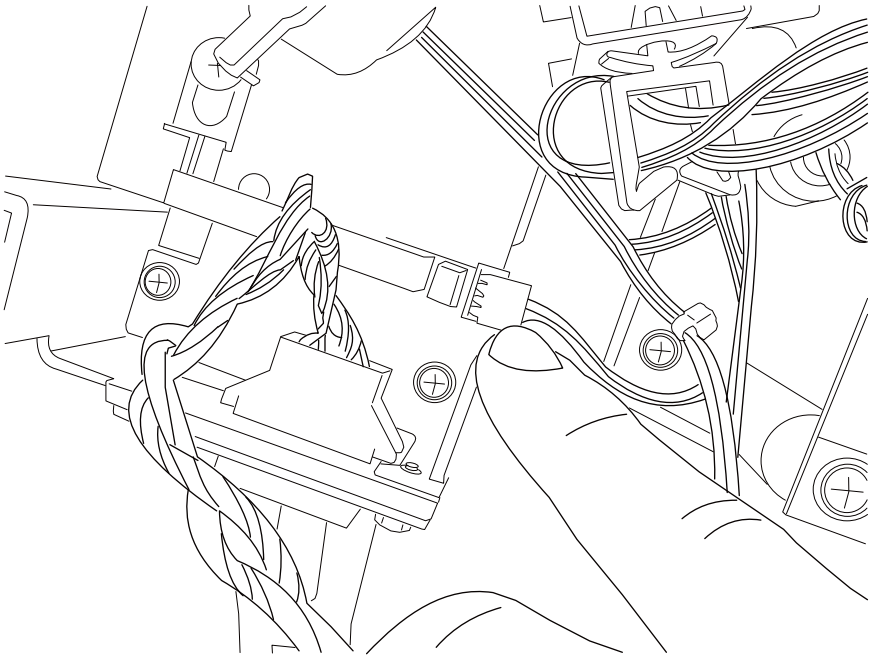

3 Release the tabs (A) securing the sensor to the offset stacker.

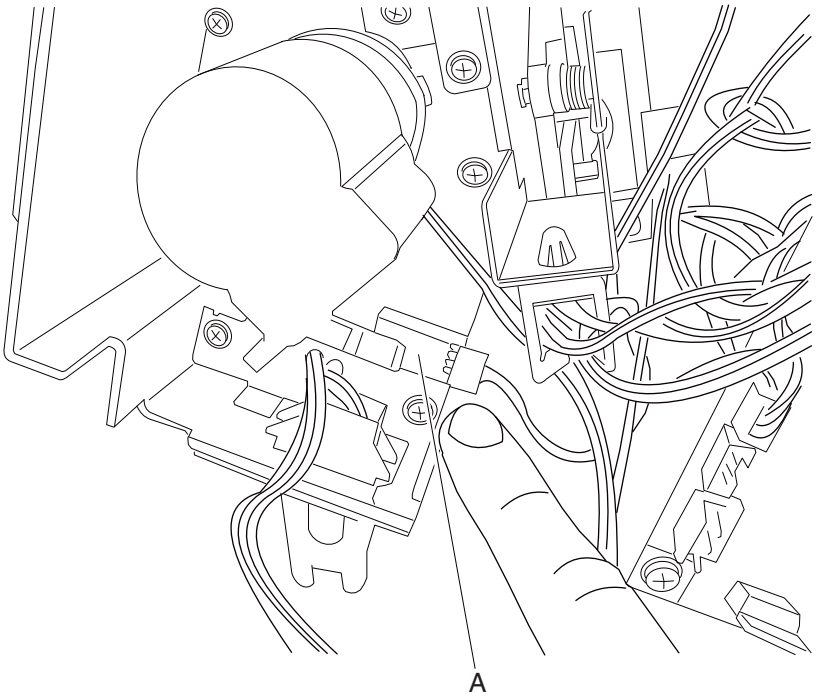

Note: The tabs may be difficult to access. The use of a spring hook or flat-blade screwdriver may be necessary to release the tabs.

Stapler/stacker controller card assembly removal

1 Remove the left cover. Go to **"Offset stacker left cover removal" on page 449**.

2 Disconnect all harnesses to the controller card.

3 Remove the three screws (A) securing the stapler/stacker controller card assembly.

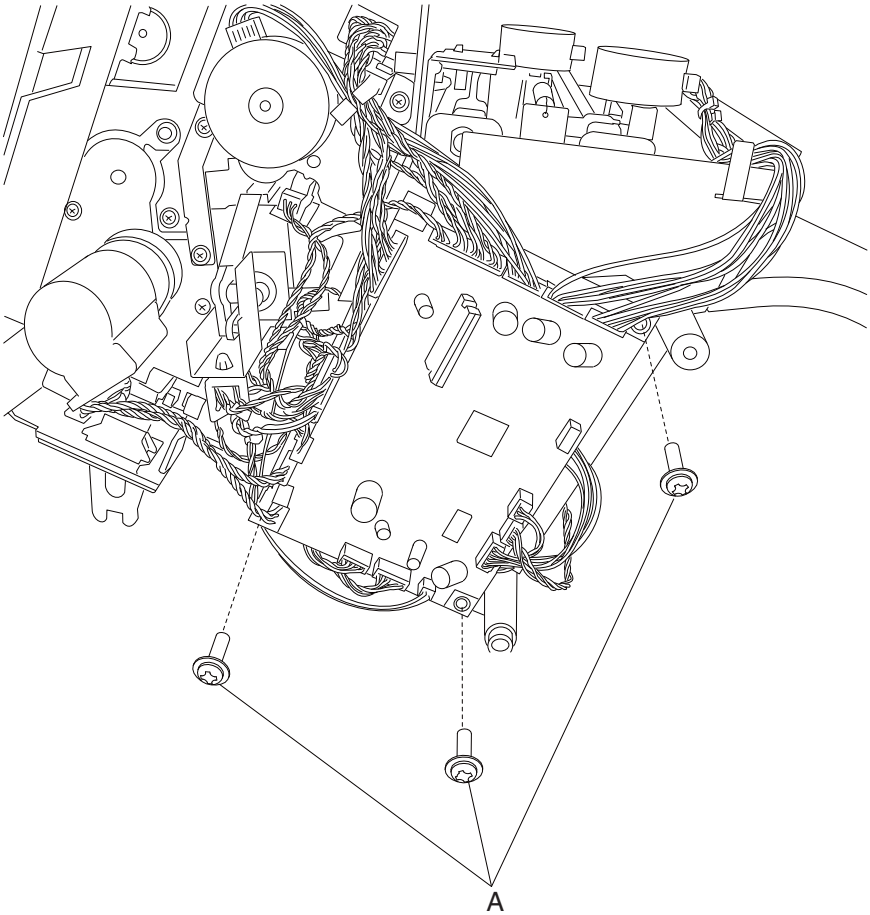

4 Remove the stapler/stacker controller card assembly.

Other removals

Lower interface cable assembly removal

1 Remove the 550-sheet frame assembly. Go to **"Media size actuator removal" on page 466**.

2 Disconnect the lower interface cable connector (A) from the 550-sheet controller card.

3 Pinch the options auto connect (B) to separate the lower interface cable assembly from the 550-sheet frame.

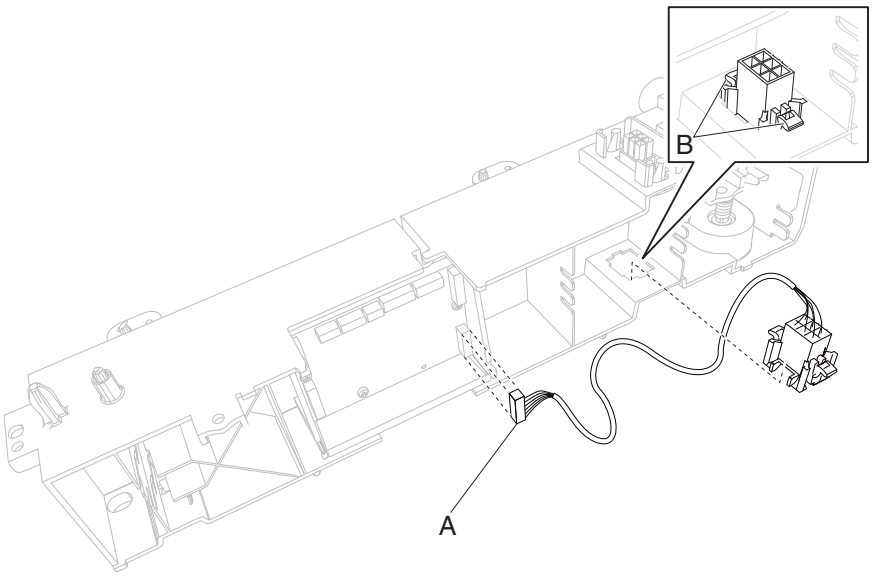

4 Remove the lower interface cable assembly.

Media size actuator removal

Note: Carefully remove the base machine from the input option tray assembly before proceeding.

1 Remove the 250-sheet controller card assembly. Go to **"250-sheet tray controller card assembly removal" on page 407**.

2 Remove the screw (A) securing the media size actuator to the 250-sheet frame.

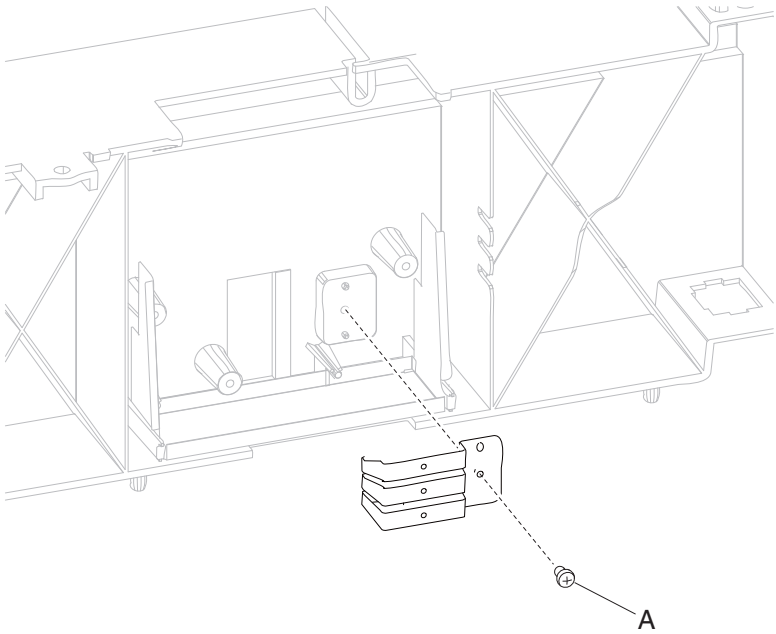

3 Remove the media size actuator.

Media tray catch spring removal

1 Remove the 250-sheet frame assembly. Go to **"250-sheet tray frame assembly removal" on page 406**.

2 Turn the drawer upside down to access the media tray catch spring.

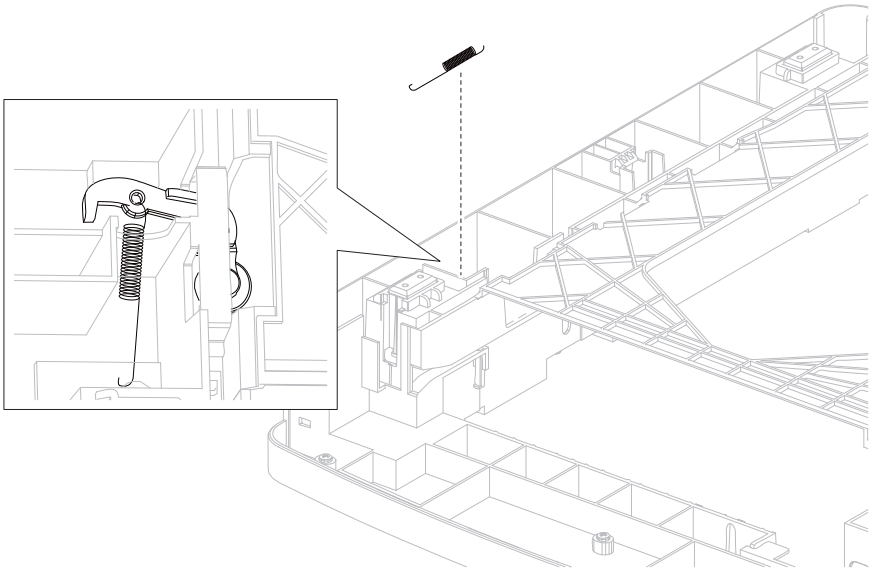

3 Release the media tray catch spring.

Media size actuator removal

1 Remove the 550-sheet controller card assembly. Go to **"550-sheet tray controller card assembly removal" on page 413**.

2 Remove the screw (A) securing the media size actuator to the 550-sheet frame.

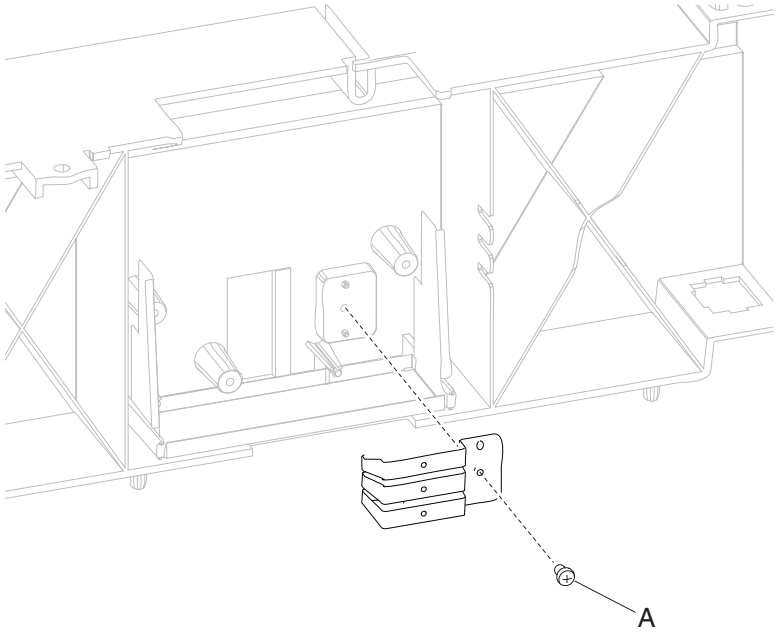

3 Remove the media size actuator.

Media tray catch spring removal

1 Remove the 550-sheet frame assembly. Go to **“Media size actuator removal” on page 466**.

2 Turn the drawer over so that you can access the media tray catch spring.

3 Release the media tray catch spring.

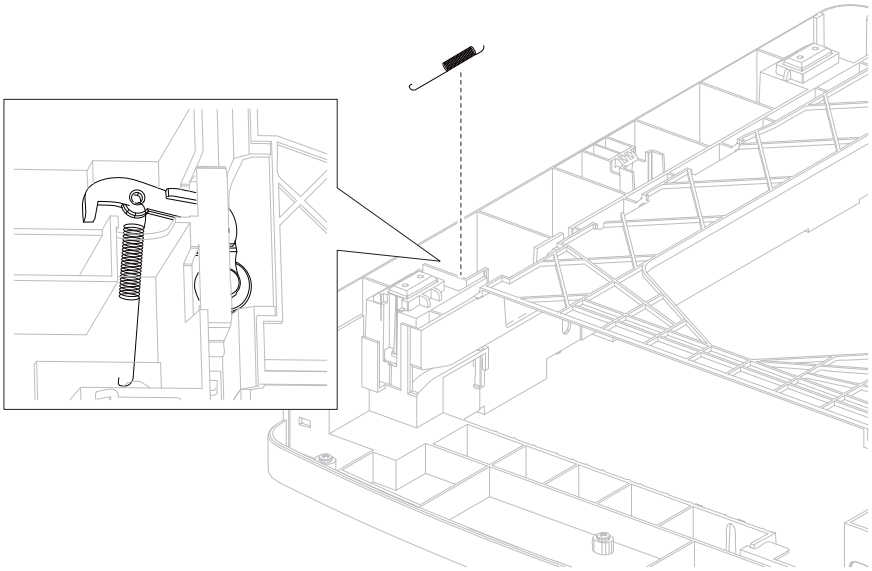

Media tray roller catch assembly removal

1 Remove the media tray catch spring. Go to **“Media tray catch spring removal” on page 467**.

2 Remove the tray roller catch assembly from the drawer.

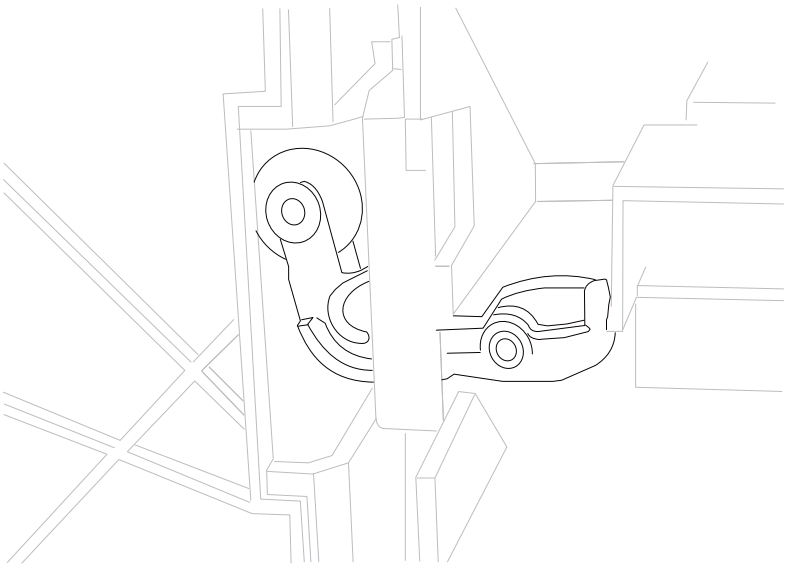

Sensor (HCIT tray raised HP) with cable assembly removal

Note: Carefully remove the base machine from the HCIT tray assembly before proceeding.

1 Remove the HCIT cover, left. Go to **"High capacity input tray (HCIT) cover, left removal" on page 423**.

2 Disconnect the sensor (HCIT tray raised HP) cable connector from the HCIT controller card assembly.

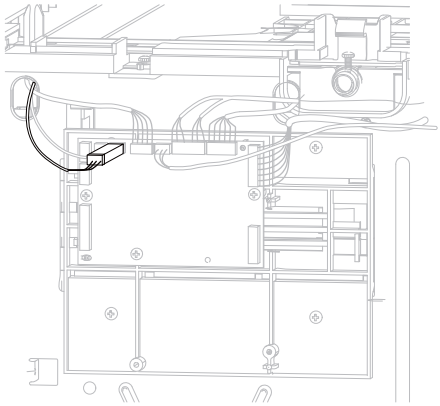

Note: Remove the cable from the restraints, and observe the routing for reinstallation.

3 Remove the screw (A) securing the sensor to the rear frame.

4 Release the hooks (B) securing the sensor to the rear frame.

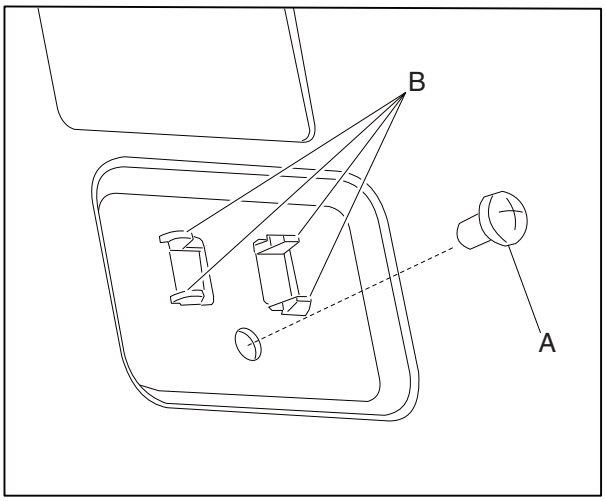

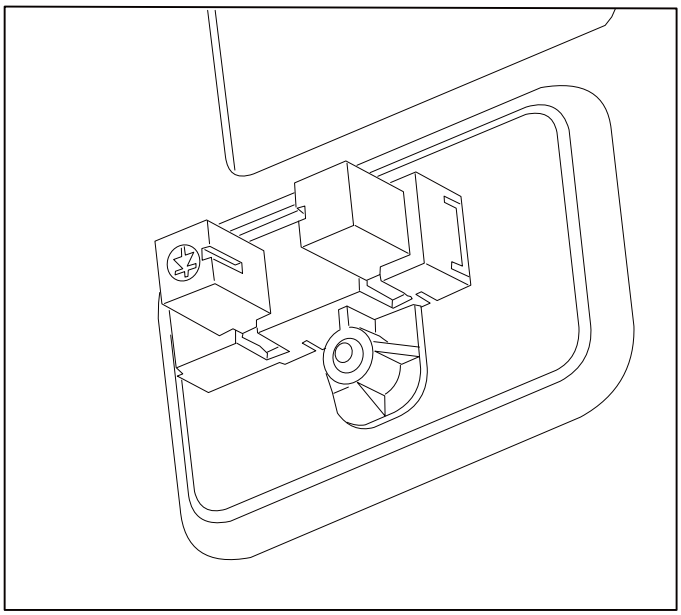

5 Remove the sensor (HCIT tray raised HP).

Sensor (HCIT pass through) with cable removal

Note: Carefully remove the base machine from the HCIT tray assembly before proceeding.

1 Remove the HCIT cover, left. Go to **"High capacity input tray (HCIT) cover, left removal" on page 423**.

2 Disconnect the sensor (HCIT pass through) cable connector from the HCIT controller card assembly.

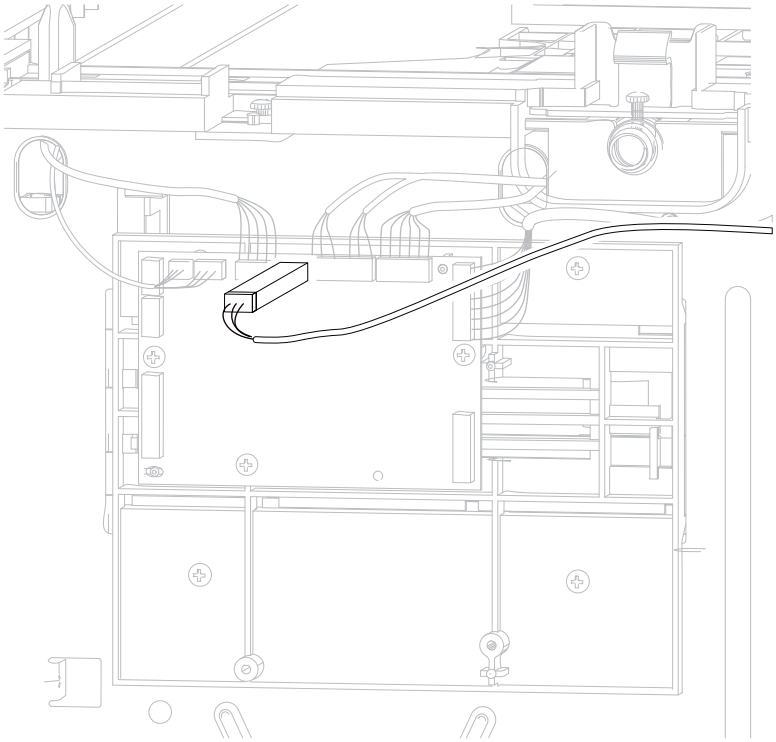

Note: Remove the cable restraint, and observe the routing for reinstallation.

3 Release the hooks (A) securing the sensor (HCIT pass through) to the machine.

4 Remove the sensor (HCIT pass through) with cable from the top plate.

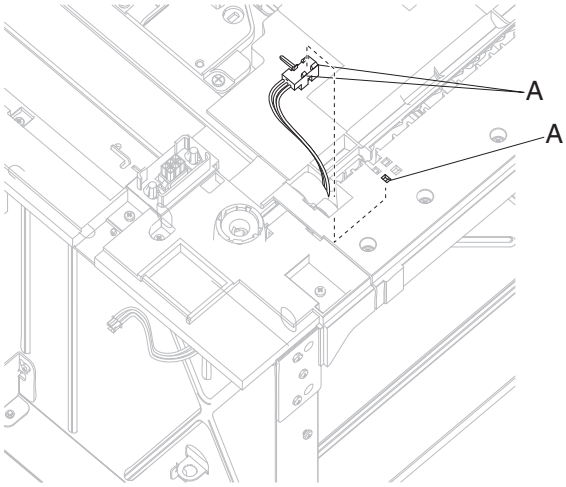

Sensor (pass through) with cable removal

1 Remove the 250-sheet frame assembly. Go to **“250-sheet tray frame assembly removal” on page 406**.

2 Disconnect the sensor (pass through) cable connector from the 250-sheet controller card.

3 Remove the sensor (pass through) with cable.

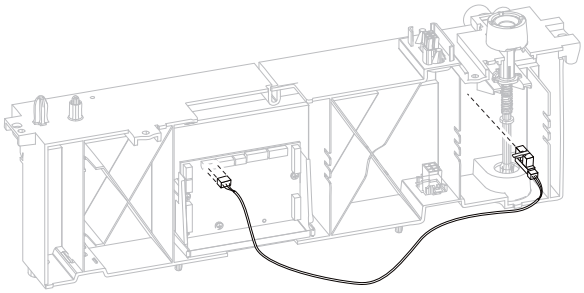

Sensor (pass through) with cable removal

1 Remove the 550-sheet frame assembly. Go to **“550-sheet tray frame assembly removal” on page 411**.

2 Disconnect the sensor (pass through) cable connector from the 550-sheet controller card.

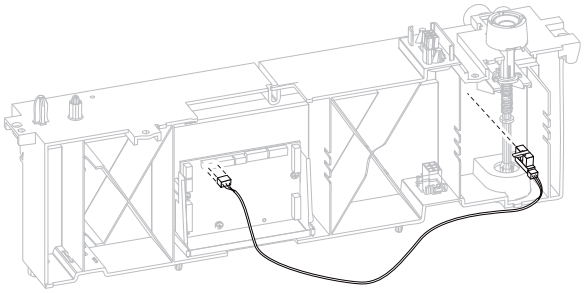

3 Remove the sensor (pass through) with cable.

Tray roller catch assembly removal

1 Remove the media tray catch spring. Go to **"Media tray catch spring removal" on page 466**.

2 Remove the tray roller catch assembly from the drawer.

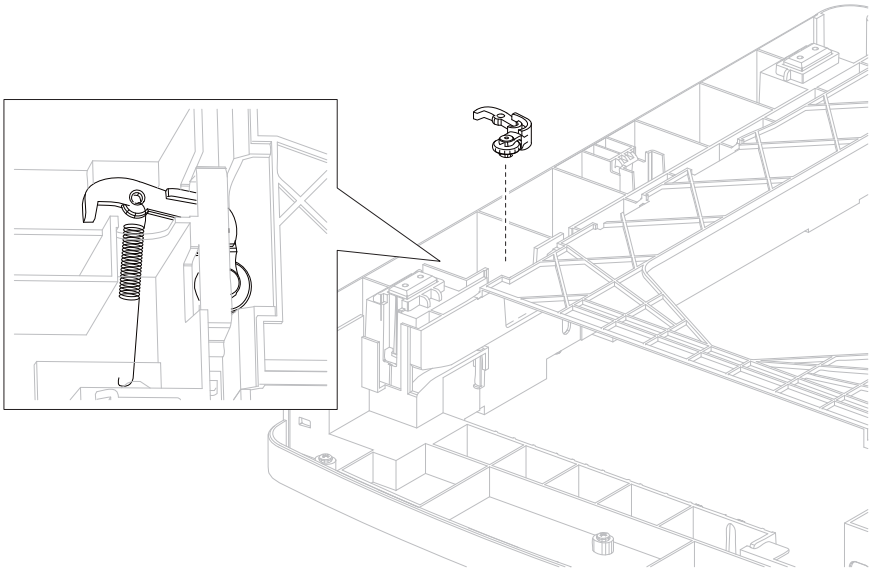

Tray roller catch assembly removal

1 Remove the media tray catch spring. Go to **"Media tray catch spring removal" on page 467**.

2 Remove the tray roller catch assembly from the drawer.

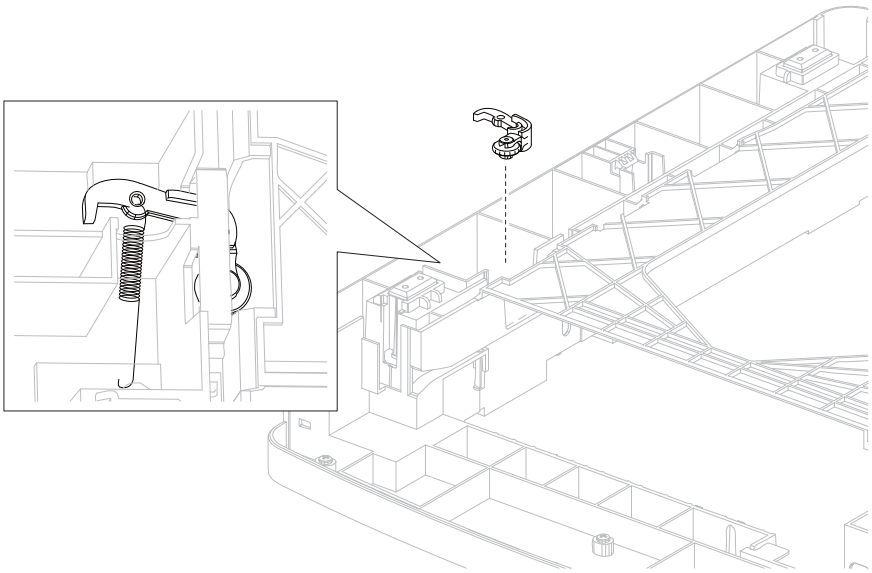

Upper interface cable assembly removal

1 Remove the 550-sheet frame assembly. Go to **"Media size actuator removal" on page 466**.

2 Disconnect the upper interface cable connector (A) from the 550-sheet controller card.

3 Release the two hooks (B) securing the options auto connect to the 550-sheet frame.

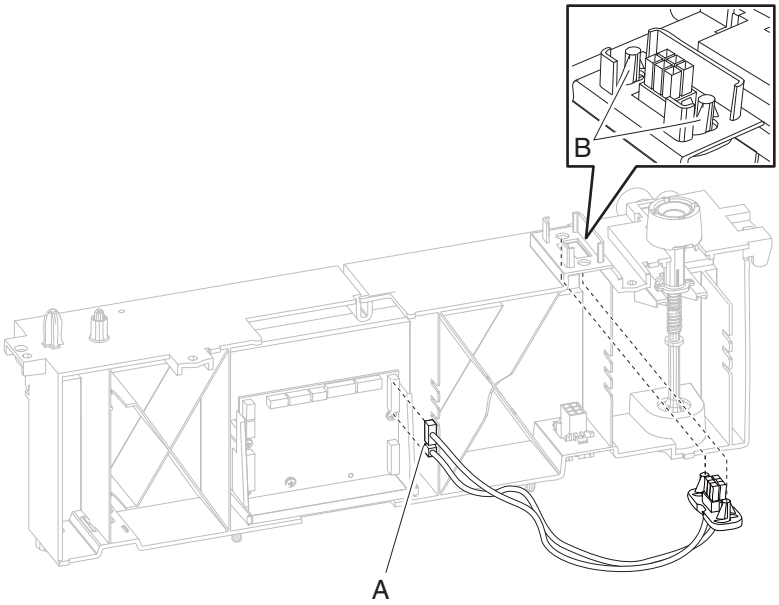

4 Remove the upper interface cable assembly.

Output expander removals

Output expander rear door assembly removal

1 Open the rear door assembly.

2 Hold the door to approximately 45° angle, and force out the left hinge and slide the right hinge out to remove the door.

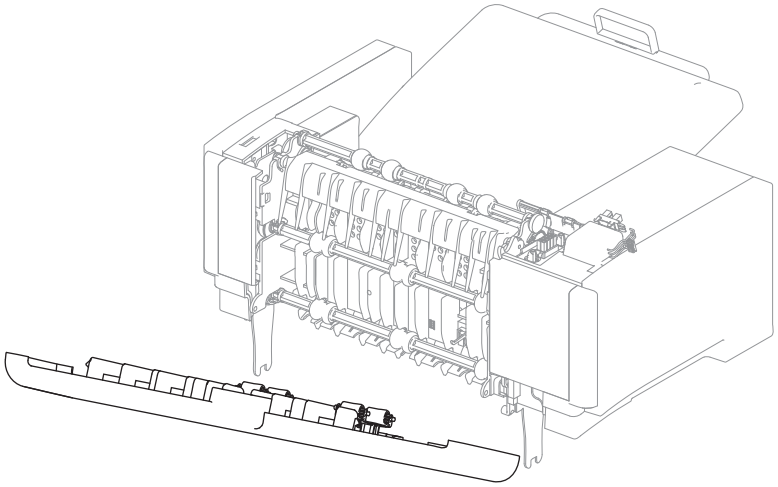

Output expander left outer cover removal

1 Remove the output expander rear door assembly. Go to **"Output expander rear door assembly removal" on page 473**.

2 Grasp the lower rear corner of the left outer cover and pull out to remove.

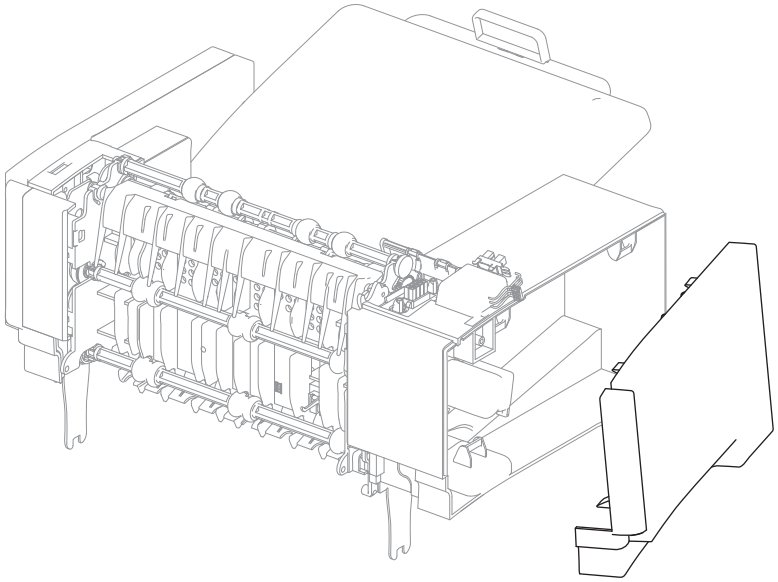

Output expander left inner cover removal

1 Remove the output expander left outer cover. Go to **"Output expander left outer cover removal" on page 474**.

2 Remove the screw (A) securing the left inner cover.

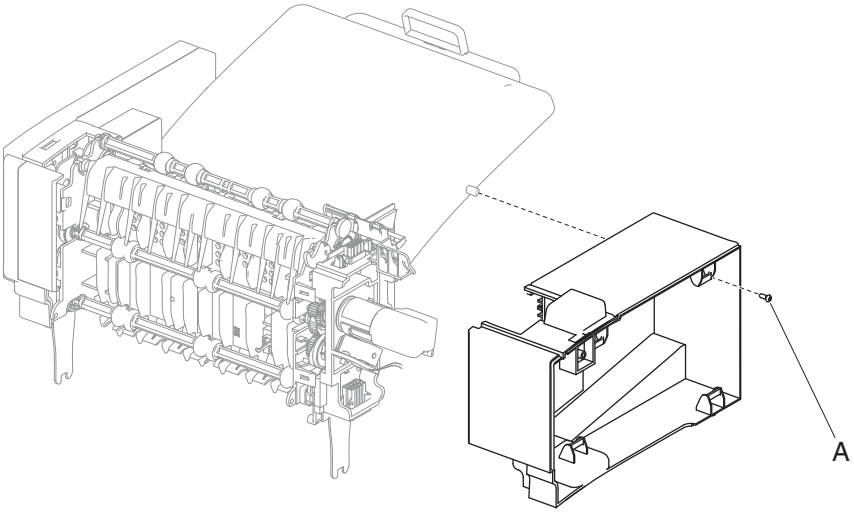

3 Holding the rear of the left inner cover, pull out while simultaneously separating it from the option.

Output expander right outer cover removal

1 Remove the output expander rear door assembly. Go to **"Output expander rear door assembly removal" on page 473**.

2 Grasp the lower rear corner of the right outer cover and pull out to remove.

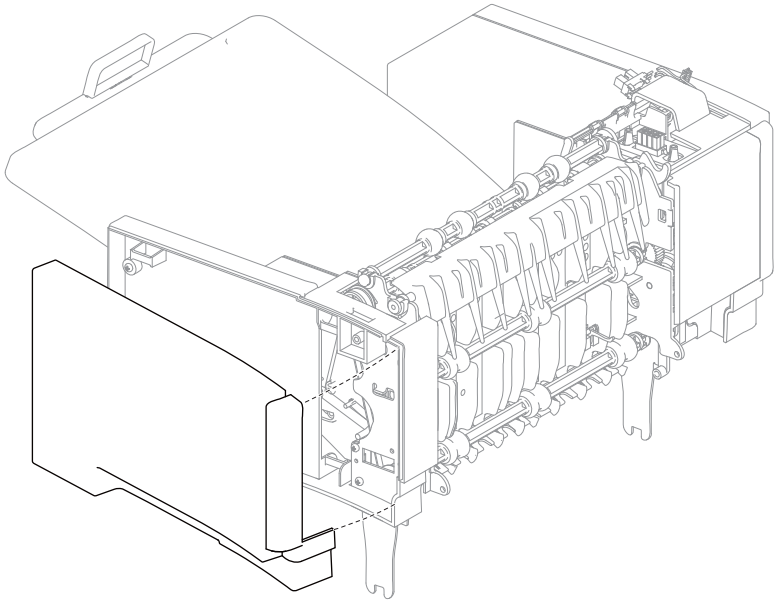

Output expander right inner cover removal

1 Remove the output expander right outer cover. Go to **"Output expander right outer cover removal" on page 475**.

2 Remove the screw (A) securing the right inner cover to the unit.

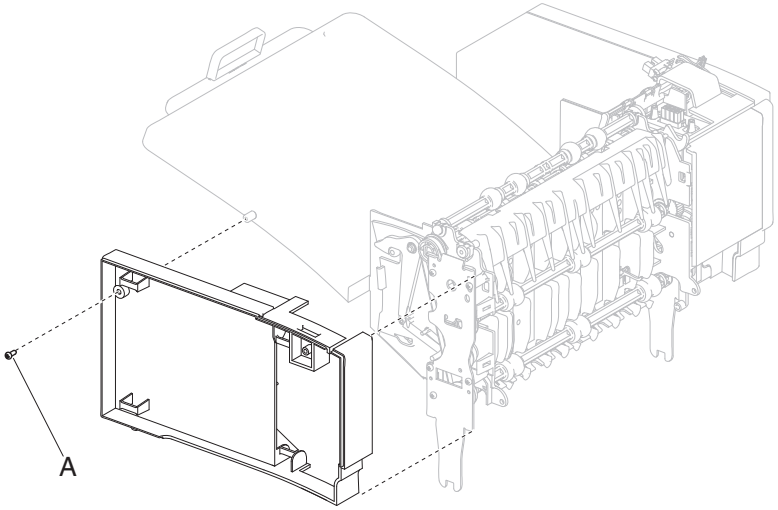

3 At the rear of the right inner cover, pull out from the option and remove the right inner cover.

Output expander media bin latch (left and right) removal

1 Remove the output expander left or right inner cover. Go to **"Output expander left inner cover removal" on page 474** or **"Output expander right inner cover removal" on page 475**.

2 If removing the right side media bin latch, use a springhook to pull the media bin latch spring off the spring post on the output expander frame.

3 If removing the left side media bin latch, just pull out on the bottom of the latch and pull the top off the boss.

4 Pull the media bin latch from its boss to remove.

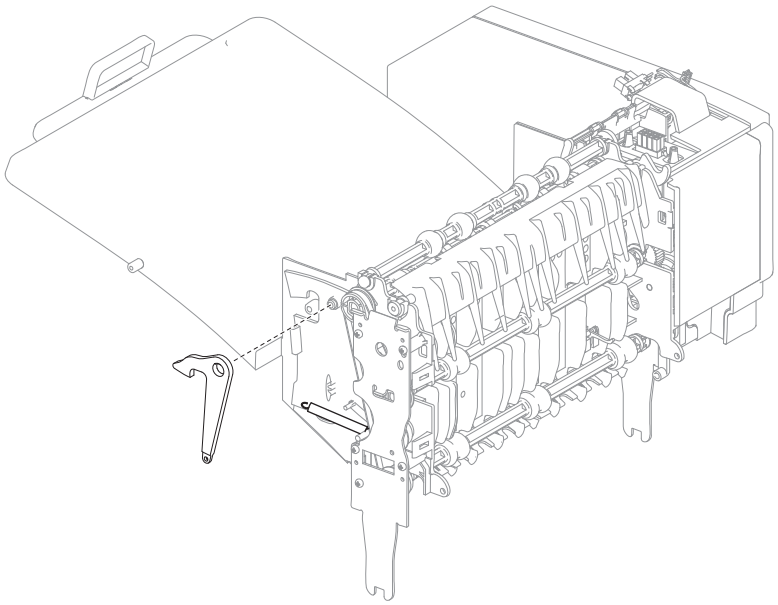

Output expander media output bin assembly removal

1 Remove the left and right output expander media bin latches. Go to **"Output expander media bin latch (left and right) removal" on page 476**.

2 Remove the standard output bin LED. Go to **"Sensor (output expander pass through) removal" on page 481**.

3 Rotate the output bin assembly downward and out of the slots to remove.

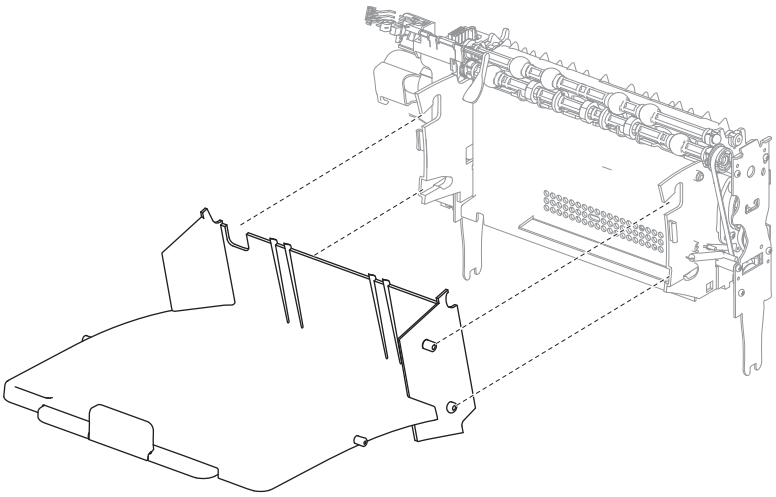

Output expander media bin full actuator removal

1 Remove the output expander left inner cover. Go to **"Output expander left inner cover removal" on page 474**.

2 Unsnap the actuator from its hinges and pull out to remove.

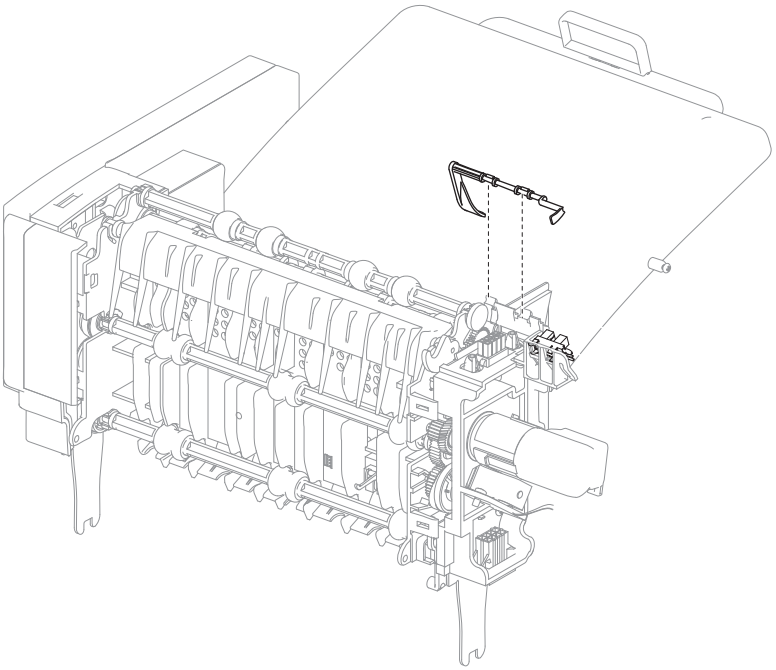

Output expander sensors (media bin full) assembly removal

1 Remove the output bin left inner cover. Go to **"Output expander left inner cover removal" on page 474**.

2 Untwist the sensor harnesses from the cable guide.

3 Release the tabs securing the sensors (media bin full) and remove.

Installation note: Be sure to replace the sensors in the correct order. Make sure their positions are not switched.

4 Remove the output expander controller card cover panel. Go to **“Output expander controller card cover panel removal” on page 480**.

5 Disconnect the sensor (media bin full) harness from the controller card and remove.

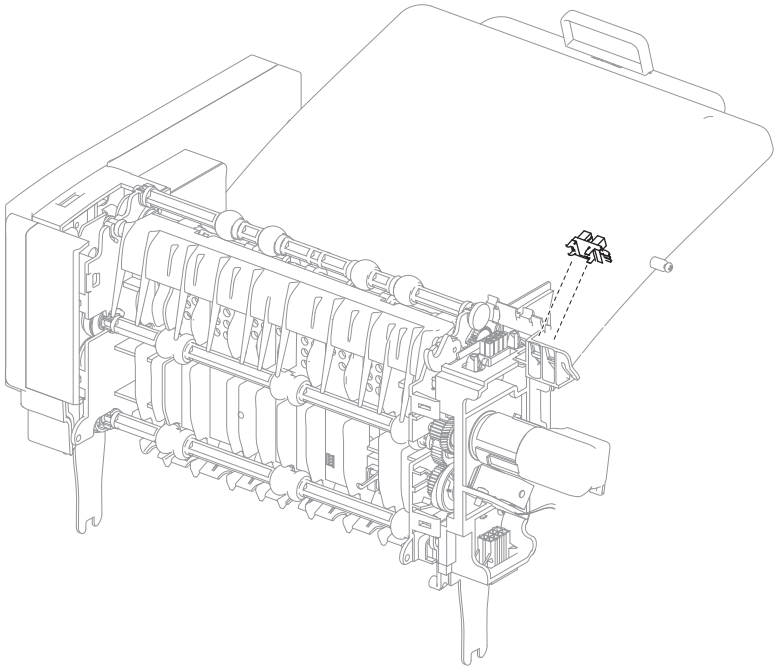

Output expander sensor (media bin full) bracket assembly removal

1 Remove the output expander left inner cover. Go to **"Output expander left inner cover removal" on page 474**.

2 Grasp the sensor bracket and pull away from the option while releasing the tab.

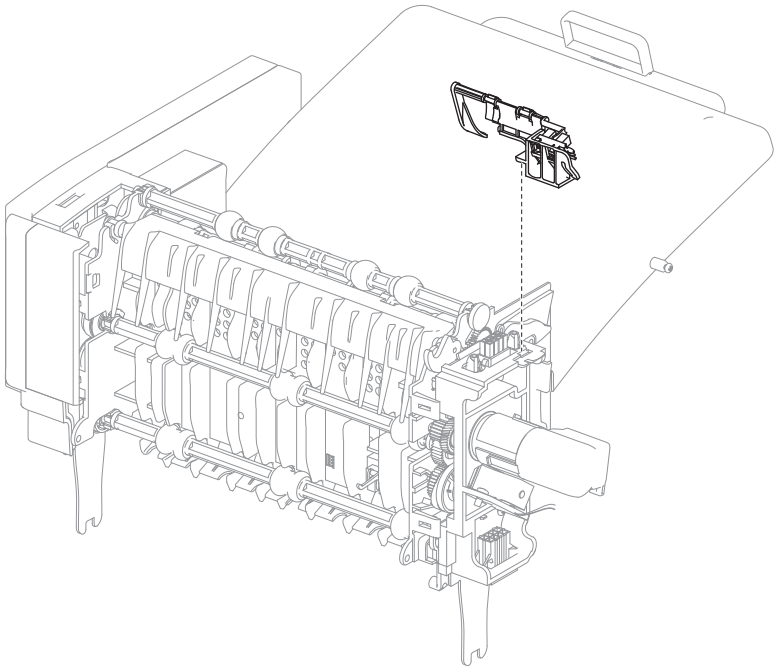

3 If replacing the bracket, remove the sensors (media bin full) from the bracket.

4 Replacement Note: Be sure to replace the sensors in the correct order. Make sure their positions are not switched.

Output expander controller card cover panel removal

1 Remove the output expander media output bin assembly. Go to **“Output expander media output bin assembly removal” on page 476**.

2 Remove the screw (A) on the back side of the option.

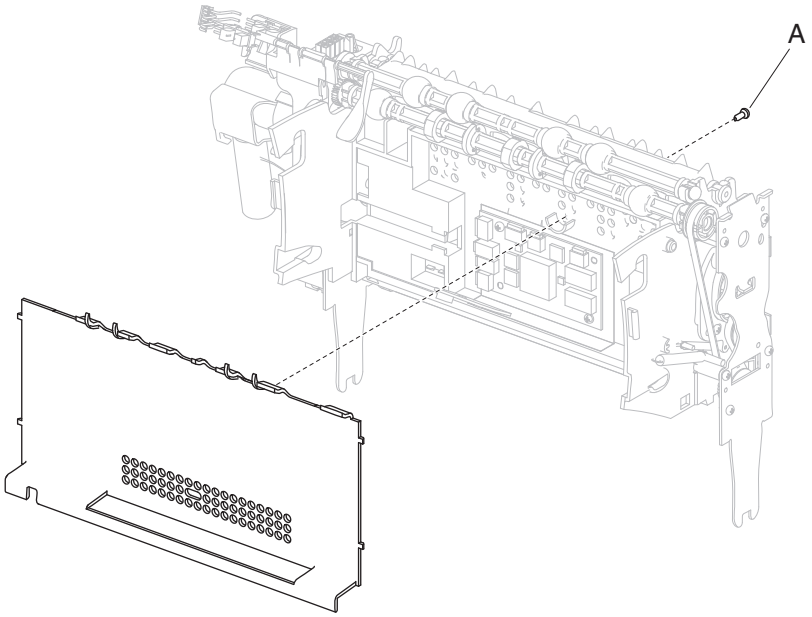

3 Remove the grounding screw (B) on the right output option frame guide the grounding cable through the hole in the frame.

4 Carefully flex the panel from the lower middle and pull the four tab (C) out of the frame and remove.

Output expander controller card removal

1 Remove the output expander controller card cover panel. Go to **“Output expander controller card cover panel removal” on page 480**.

2 Disconnect all harnesses from the controller card.

3 Remove the two screws (A) securing the controller card to the frame.

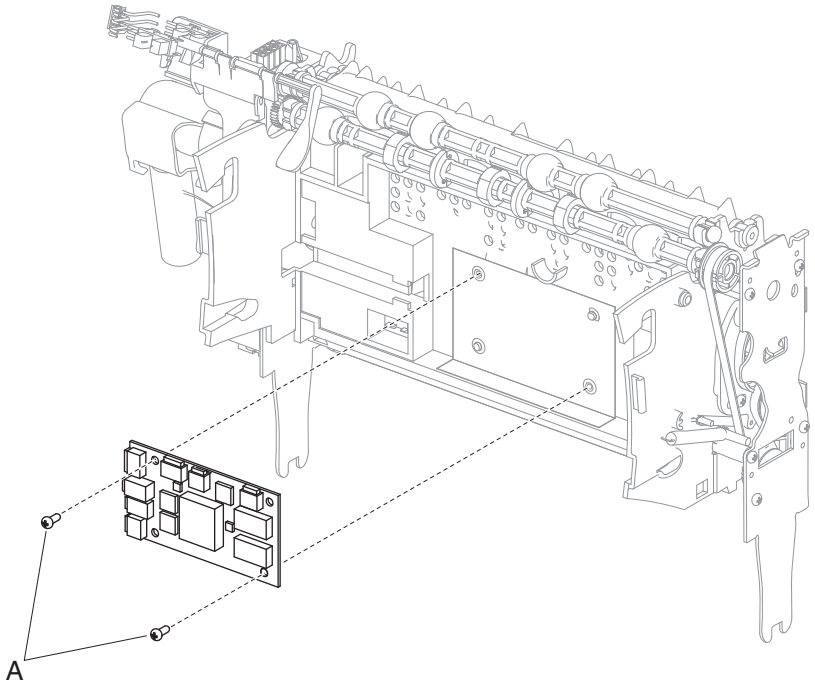

4 Remove the controller card.

5 Replacement Note: Be sure to replace the interface connectors in their proper orientation as the two have common connection pins.

Sensor (output expander pass through) removal

1 Remove the output expander controller card cover panel. Go to **"Output expander controller card cover panel removal" on page 480**.

2 Release the tabs securing the sensor (pass through).

3 Remove the sensor harness from the controller card.

4 Pull the connector harness through the frame and remove.

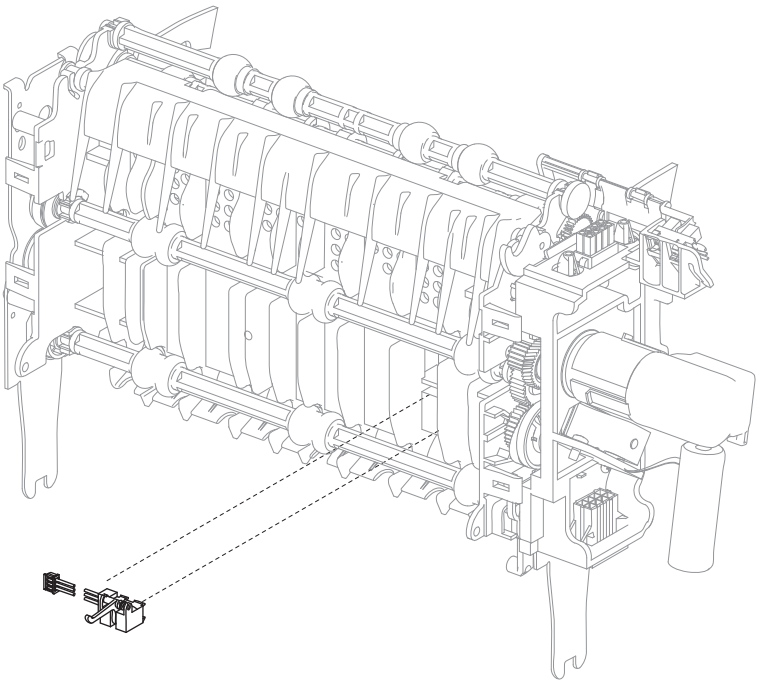

Output expander deflector gate removal

1 Use a spring hook to disconnect the upper end of the deflector gate spring.

2 Temporarily hook the upper end of the deflector gate spring to the left frame.

3 Pull the deflector gate out of its hinges and remove.

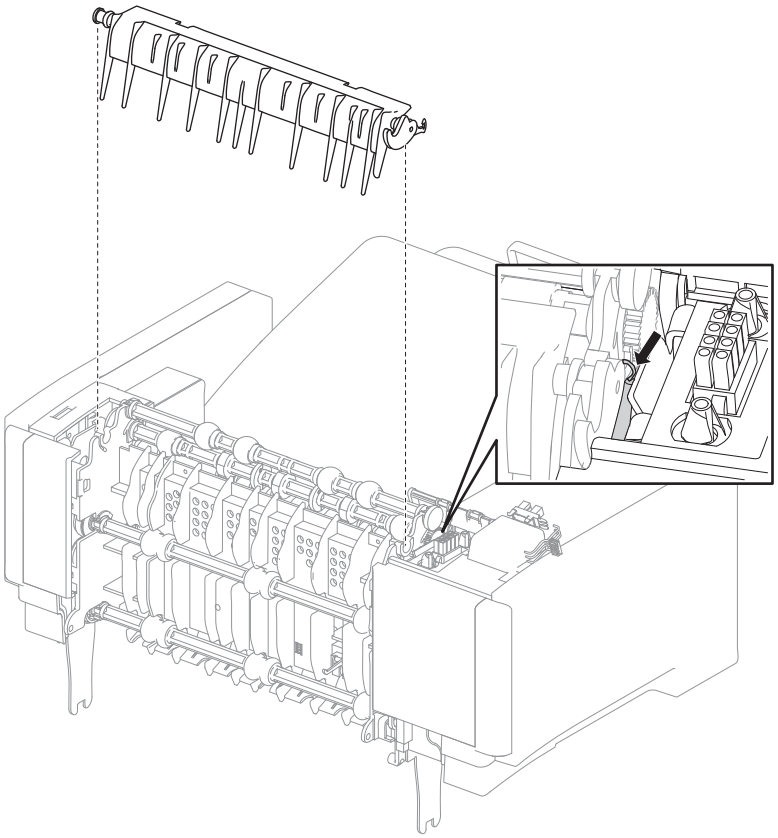

Sensor (output expander deflector gate HP) removal

1 Remove the output expander left inner cover. Go to **"Output expander left inner cover removal" on page 474**.

2 Remove the four screws securing the left frame assembly to the option.

3 Pull the left frame assembly out far enough to gain access to the sensor (deflector gate HP).

4 Release the tabs securing the sensor (deflector gate HP) and remove.

5 Disconnect the harness to the sensor and remove.

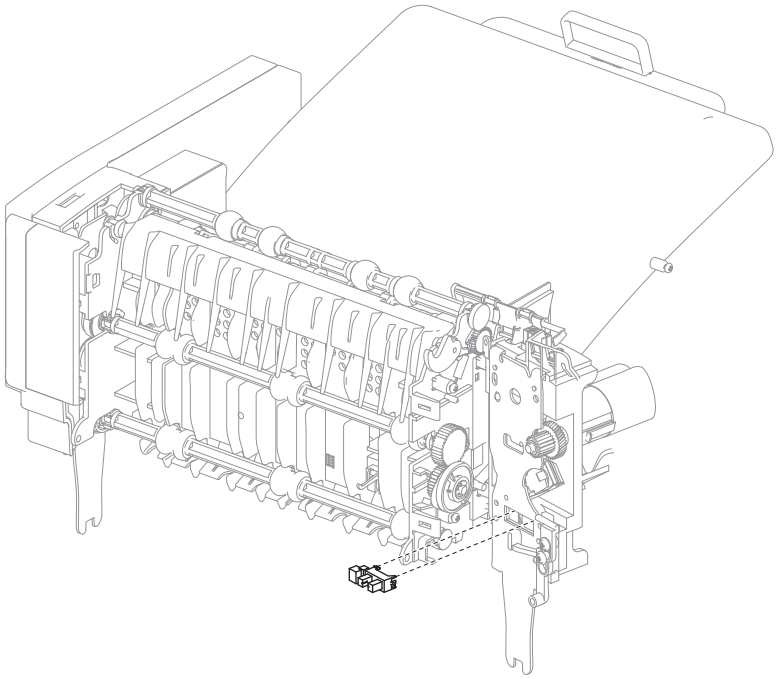

MFP stapler assembly removals

MFP stapler assembly rear door assembly removal

1 Open the rear door assembly.

2 Force the left hinge out of the slot by pushing the door to the right.

3 Once the left hinge has been disengaged, pull the right hinge out.

4 Remove the rear door assembly.

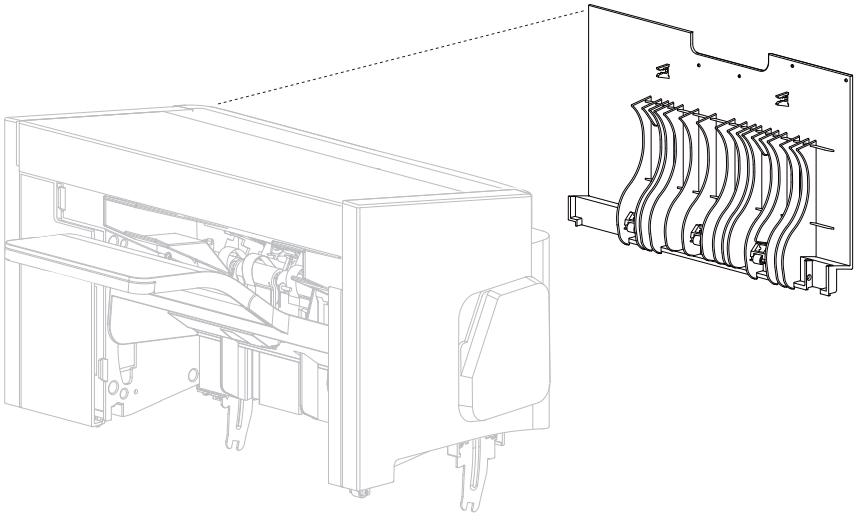

MFP stapler assembly right cover removal

1 Remove the two screws (A) on the inside of the exit bin compartment securing the right cover.

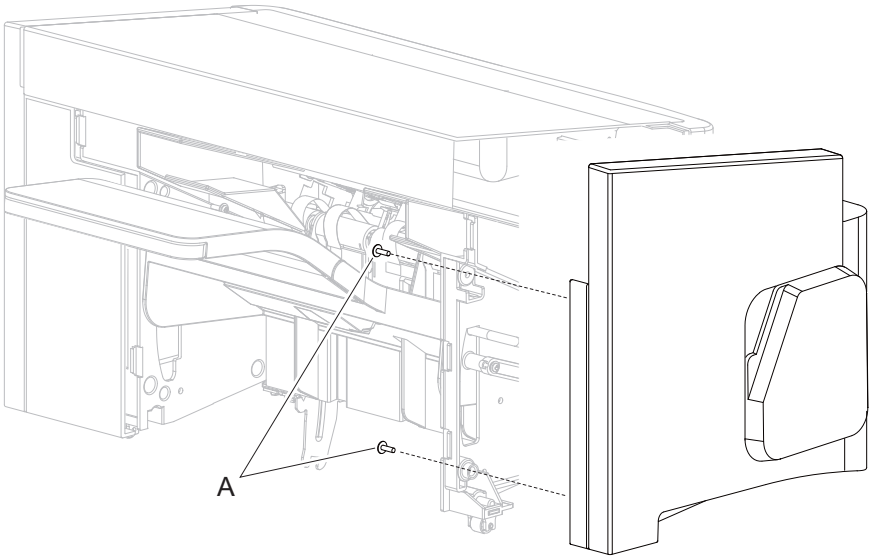

2 Pull out on the front side of the right cover to disengage the tabs.

3 Remove the right cover.

MFP stapler assembly left cover removal

1 Remove the two screws (A) on the inside of the exit bin compartment securing the left cover.

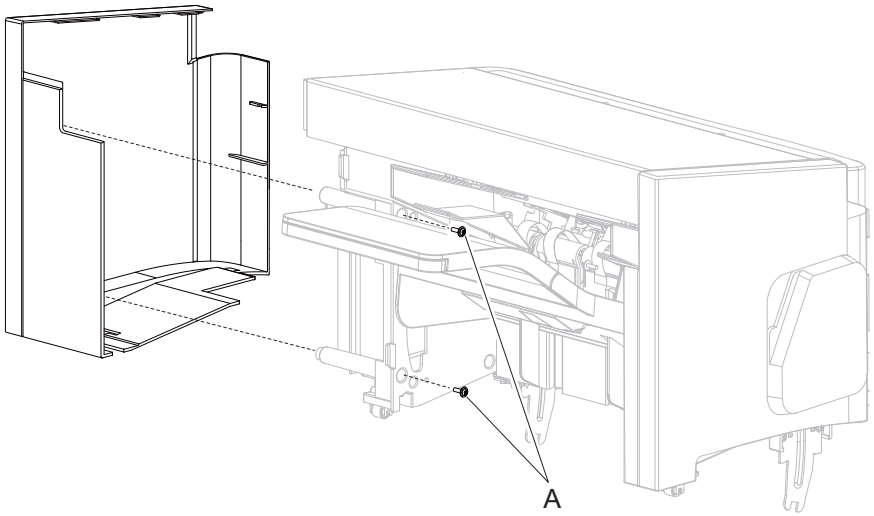

2 Pull out on the front side of the left cover to disengage the tabs.

3 Remove the left cover.

MFP stapler assembly top cover removal

1 Remove the left and right covers. Go to **"MFP stapler assembly left cover removal" on page 486** and **"MFP stapler assembly right cover removal" on page 485**.

2 Remove the two screws (A) from the left and right side of the top cover.

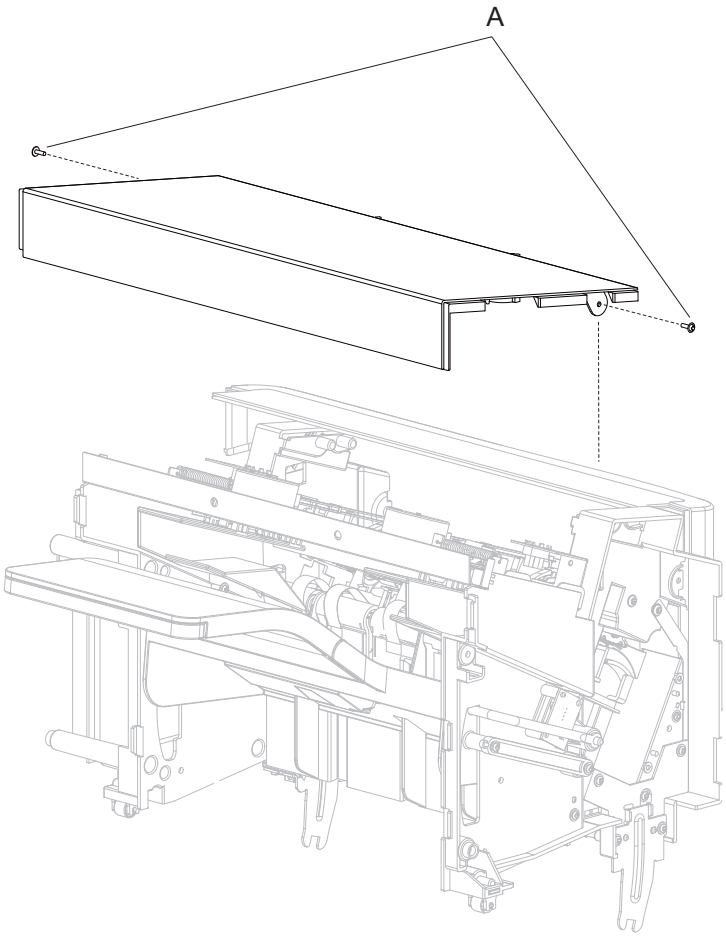

3 Pull up and toward the front to remove the top cover.

MFP stapler assembly handle cover removal

1 Remove the left and right covers. Go to **“MFP stapler assembly left cover removal” on page 486** and **“MFP stapler assembly right cover removal” on page 485**.

2 Remove two screws (A) from each side of the handle cover.

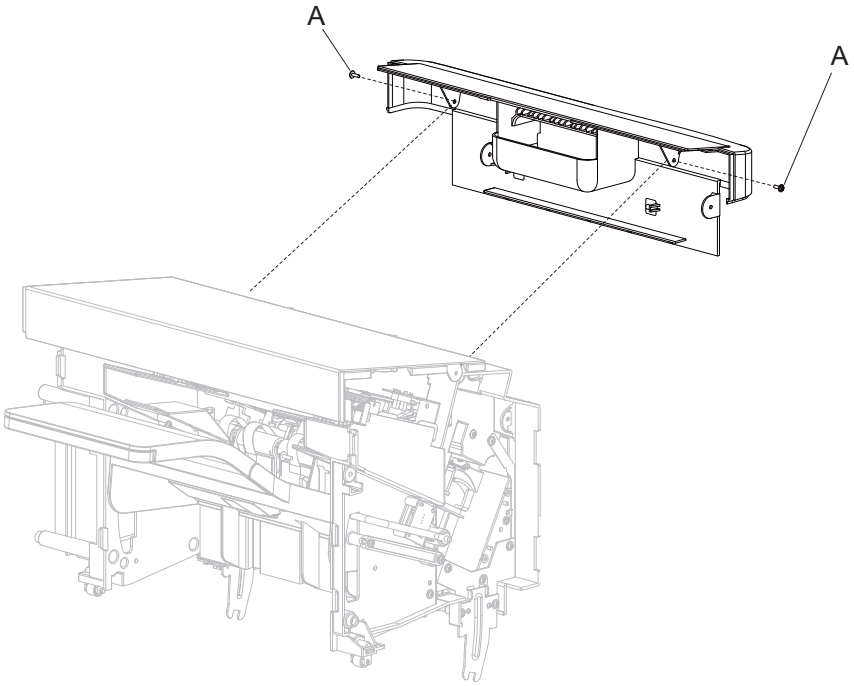

3 Lift up and to the rear to remove the cover.

MFP stapler assembly LED sensor cover removal

1 Remove the screw (A) securing the LED sensor cover to the underside of the output bin.

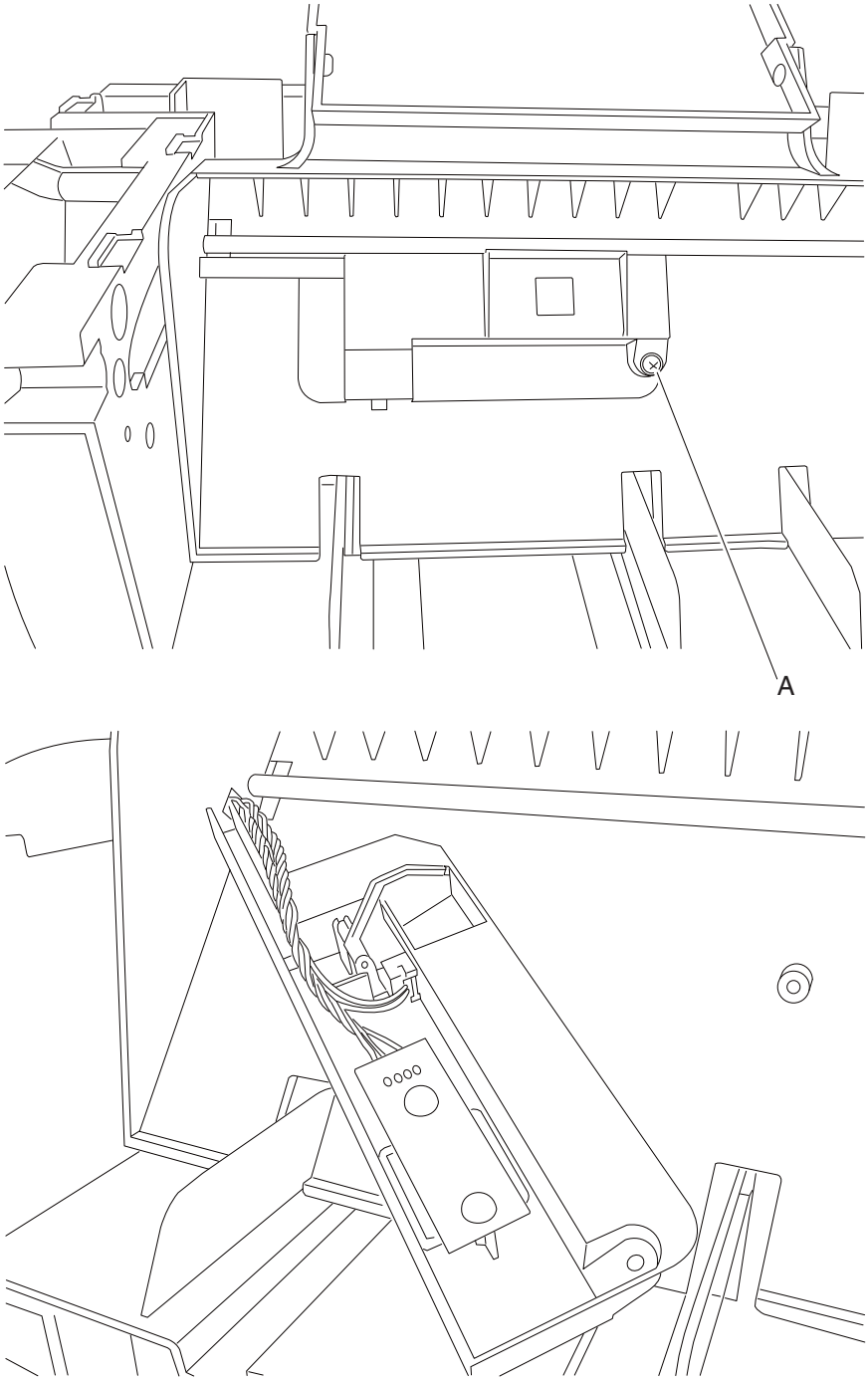

2 Remove the standard output bin LED. Go to **"MFP stapler assembly standard output bin LED and LED clear lens removal" on page 491**.

3 Remove the sensor (finisher media bin present). Go to **"Sensor (offset stacker finisher media bin present) removal" on page 453**.

4 Remove the LED sensor cover.

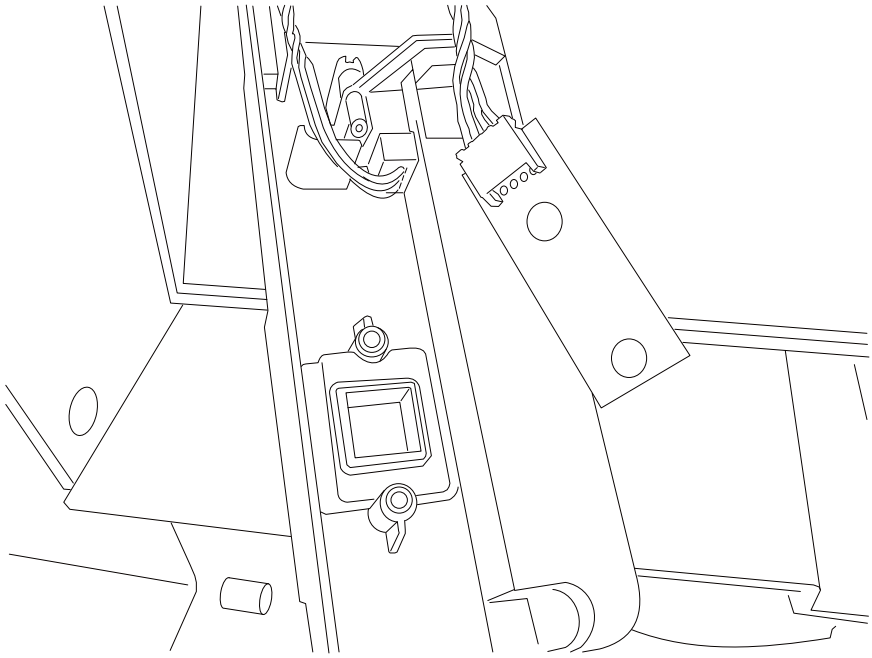

Sensor (MFP stapler assembly finisher media bin present) removal

1 Remove the LED sensor cover. Go to **"MFP stapler assembly LED sensor cover removal" on page 489**.

2 Using a flat-blade screwdriver, release the tabs (A) on the sensor and remove it from the sensor cover.

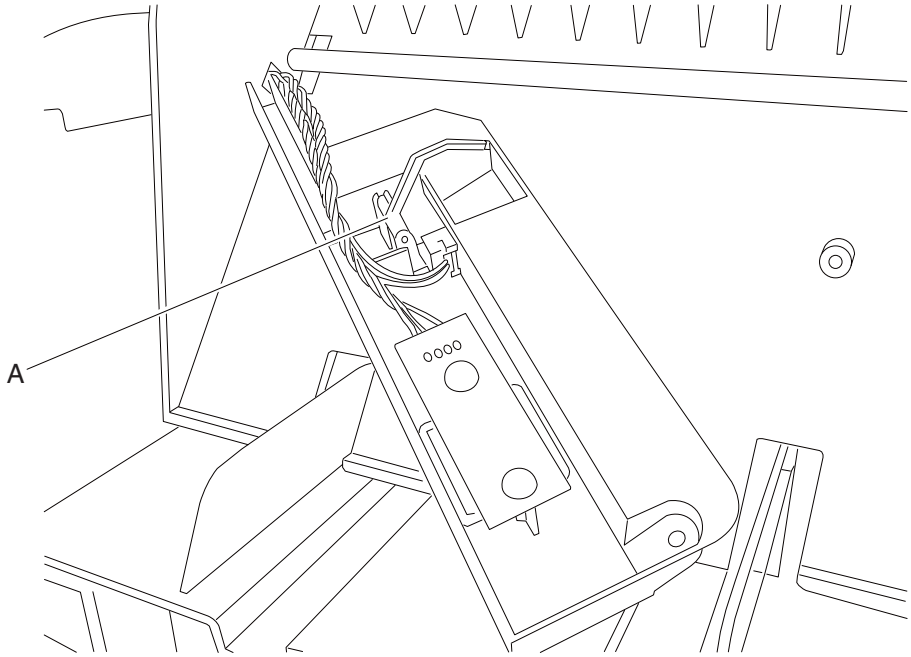

3 Remove the harness connected to the sensor (finisher media bin present).

4 Remove the sensor (finisher media bin present).

MFP stapler assembly standard output bin LED and LED clear lens removal

1 Remove the LED sensor cover. Go to **“MFP stapler assembly LED sensor cover removal” on page 489**.

2 Remove the two screws (A) securing the LED to the cover.

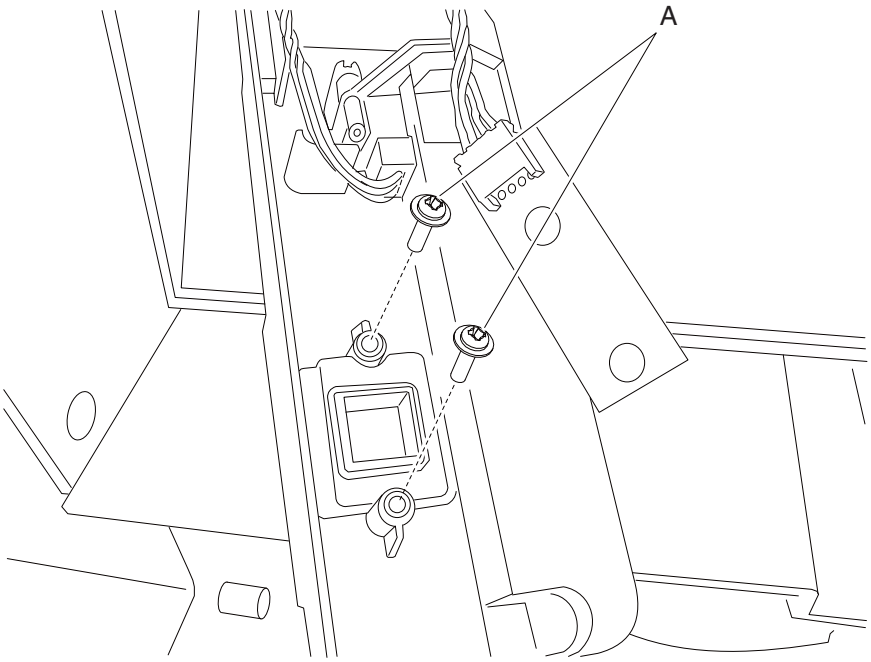

3 Remove the LED and disconnect the harness.

4 Remove the LED clear lens.

MFP stapler assembly tamper drive belt removal

1 Remove the tamper recoil spring.

2 Pull the belt out the tamper belt holder and remove the belt from the pulley.

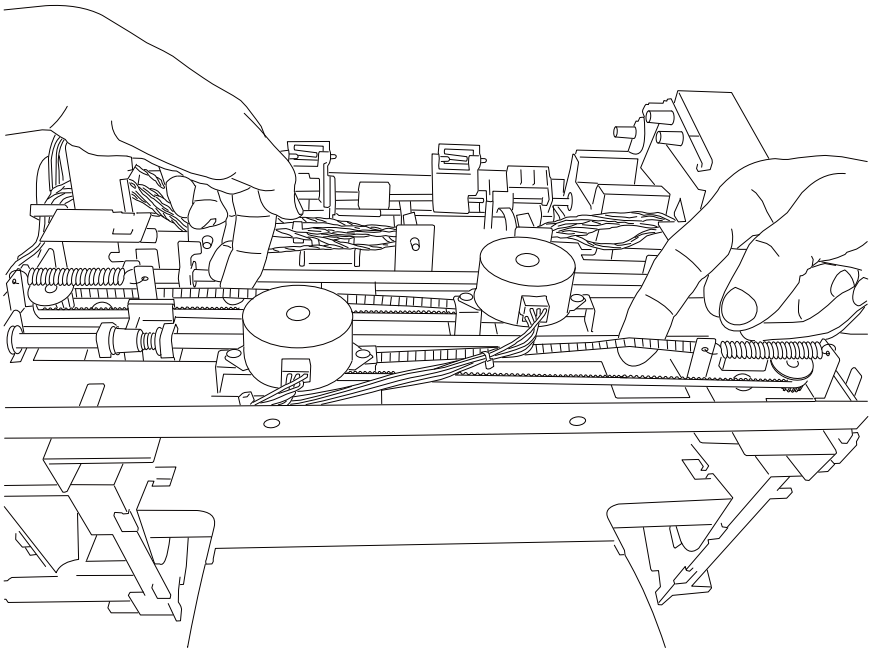

MFP stapler assembly tamper drive motor assembly removal

1 Remove the top cover. Go to **"MFP stapler assembly top cover removal" on page 487**.

2 Pull slack in the tamper drive belt and remove the belt from the tamper drive belt pulley.

3 Disconnect the tamper driver motor harness from the controller card.

4 Remove the two screws (A) securing the tamper drive motor assembly to the tamper frame.

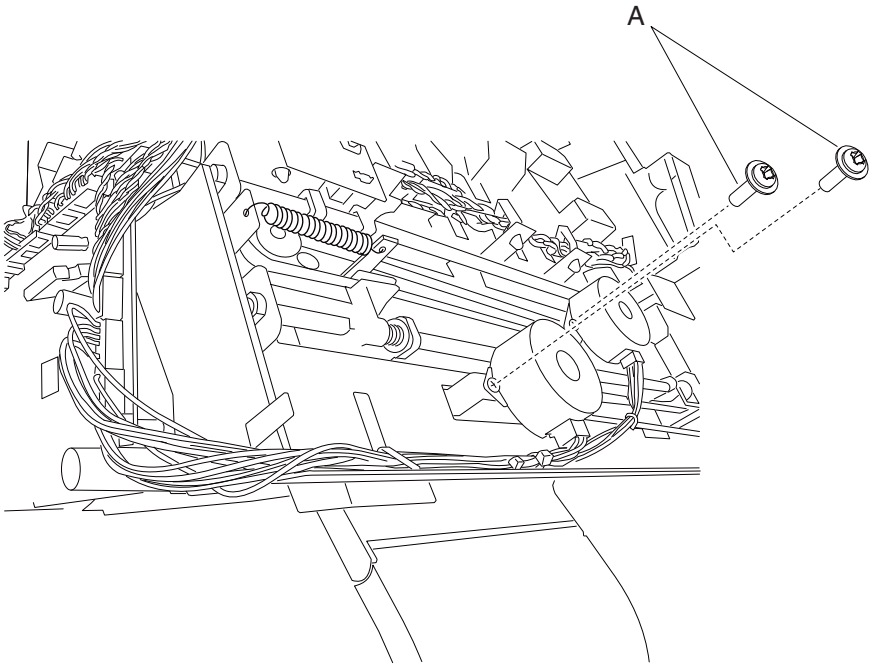

5 Remove the tamper drive motor assembly.

MFP stapler assembly media stack flap and media stack flap actuator removal

1 Remove the handle cover. Go to **"MFP stapler assembly handle cover removal" on page 488**.

2 Release the locking tab and slide the media stack flap actuator to the right and remove.

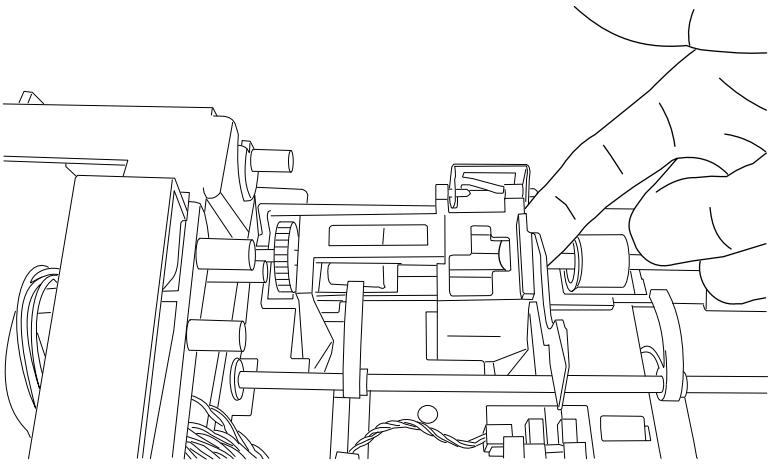

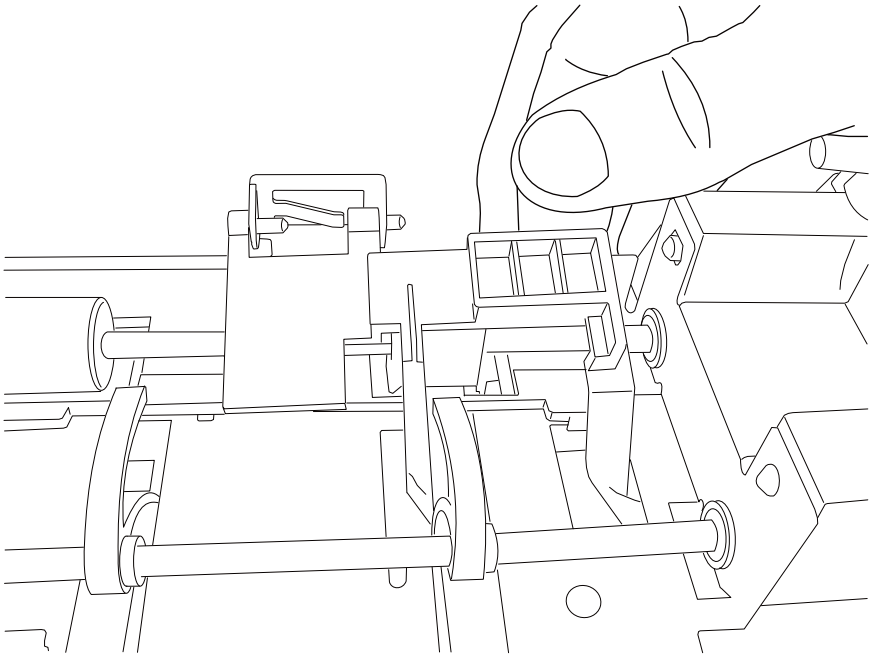

MFP stapler assembly stapler unit assembly removal

1 Remove the right cover. Go to **“MFP stapler assembly right cover removal” on page 485**.

2 Remove the four cable harnesses attached to the stapler unit assembly.

3 Remove the three screws (A) securing the stapler unit assembly.

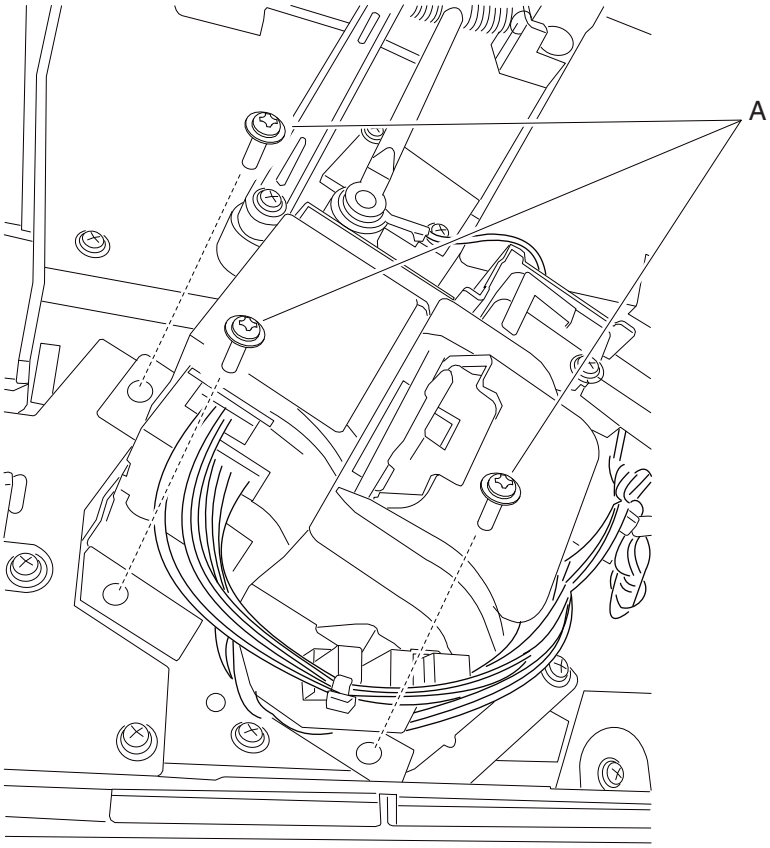

4 Remove the stapler unit assembly.

MFP stapler assembly paddle drive motor assembly removal

1 Remove the left cover. Go to **“MFP stapler assembly left cover removal” on page 486**.

2 Disconnect the paddle motor harness from the controller card.

3 Remove the cable from the harness clip.

4 Remove the two screws (A) securing the two paddle drive motor assemblies.

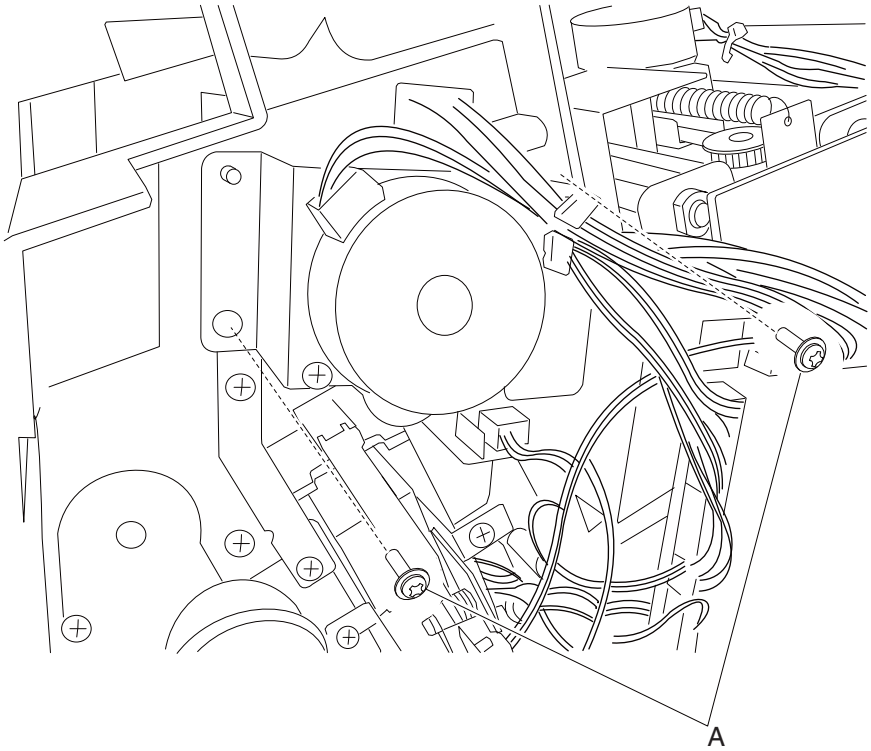

5 Remove the paddle drive motor assembly.

Sensor (MFP stapler assembly media stack) removal

1 Remove the top cover. Go to **“MFP stapler assembly top cover removal” on page 487**.

2 Disconnect the harness to the sensor (media stack).

3 Using your fingers, pinch tab (A) securing the sensor (media stack) and remove.

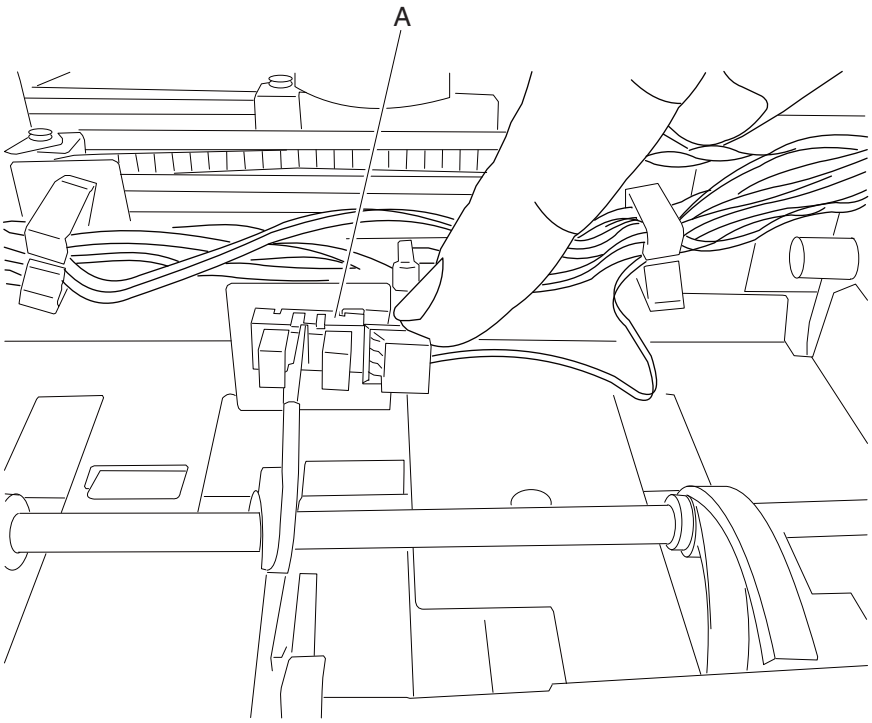

Sensor (MFP stapler assembly paddle HP) removal

1 Remove the left cover. Go to **"MFP stapler assembly left cover removal" on page 486**.

2 Disconnect the harness to the sensor (paddle home position).

3 Using your fingers, pinch tab (A) securing the sensor (paddle home position) and remove.

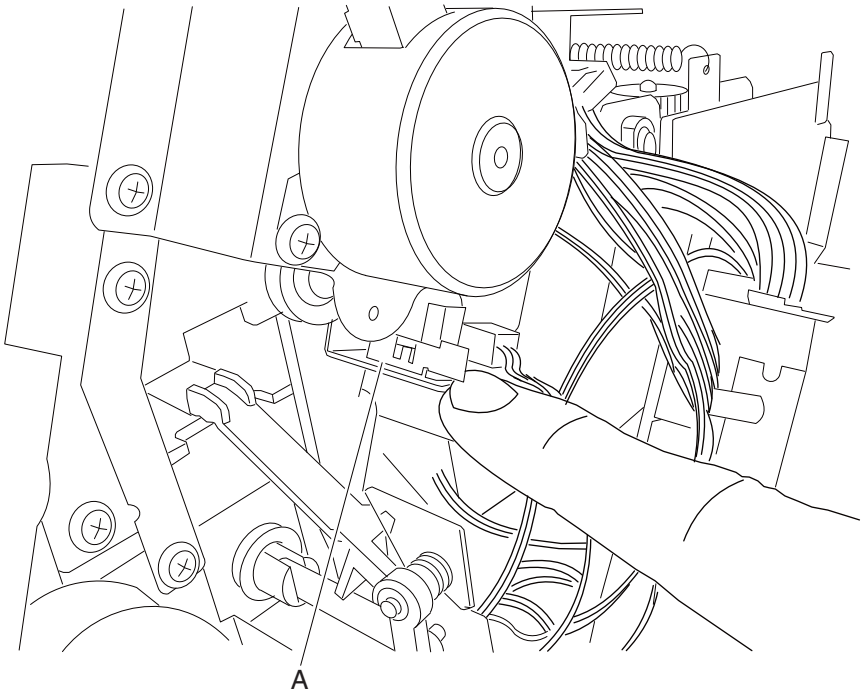

Sensor (MFP stapler assembly stapler access door interlock) removal

1 Remove the right cover. Go to **“MFP stapler assembly right cover removal” on page 485**.

2 Disconnect the harness to the sensor (stapler access door interlock).

3 Using your fingers, pinch tab (A) securing the sensor (stapler access door interlock) and remove.

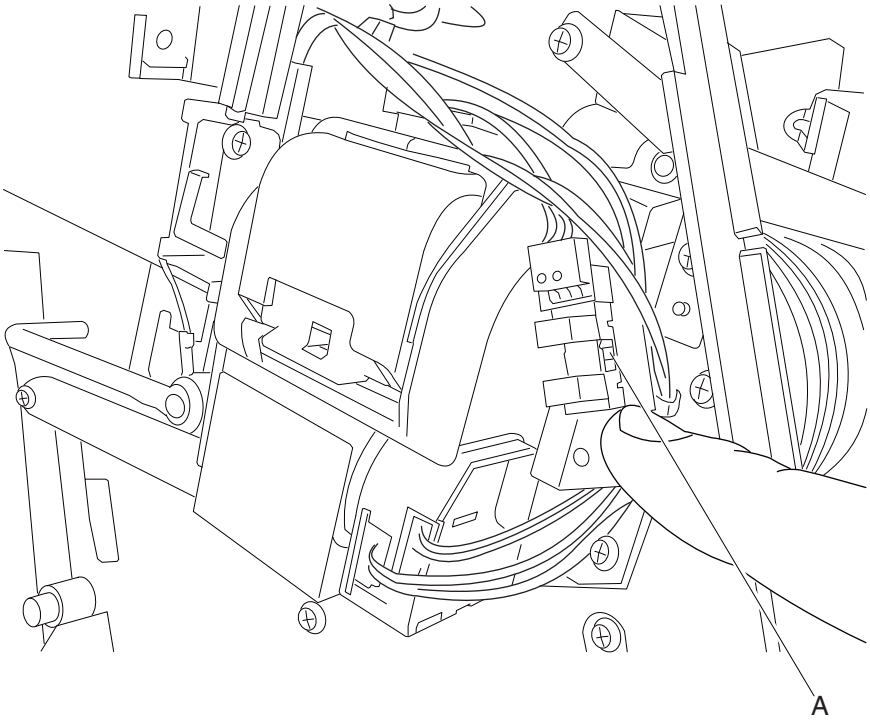

Sensor (MFP stapler assembly tamper HP left and right) removal

1 Remove the top cover. Go to **“MFP stapler assembly top cover removal” on page 487**.

2 Disconnect the harness to the sensor (tamper HP left and right).

3 Using your fingers, pinch the tabs (A) securing the staple finisher sensor (tamper HP left and right) and remove.

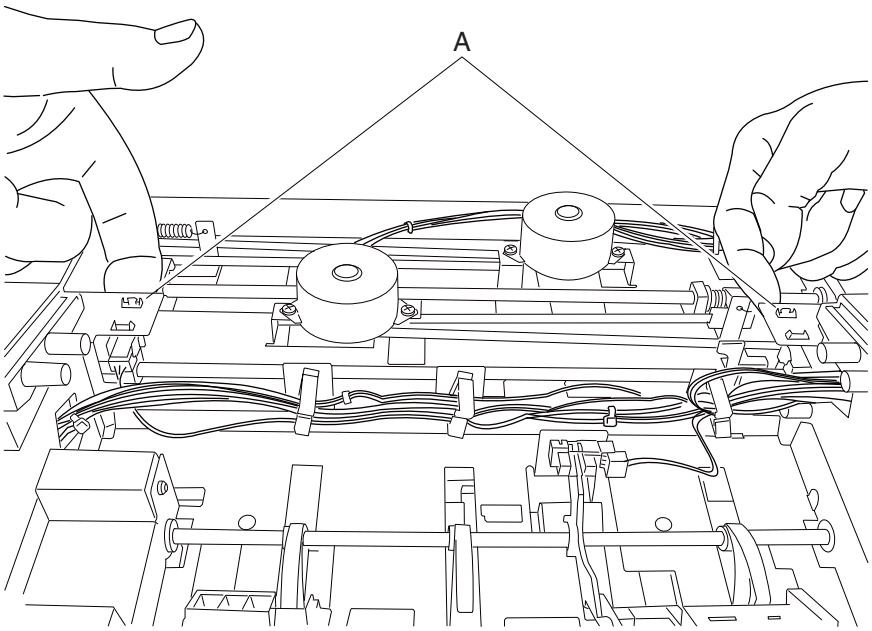

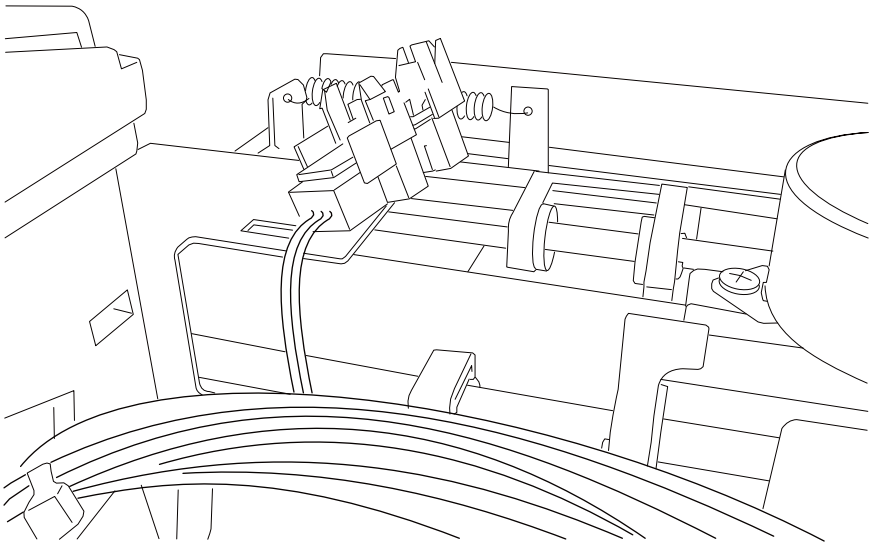

Sensor (MFP stapler assembly bin full send) removal

1 Remove the stapler/stacker controller card assembly. Go to **“Stapler/stacker controller card assembly removal” on page 504**.

2 Remove the two screws (A) securing the staple finisher sensor (bin full send).

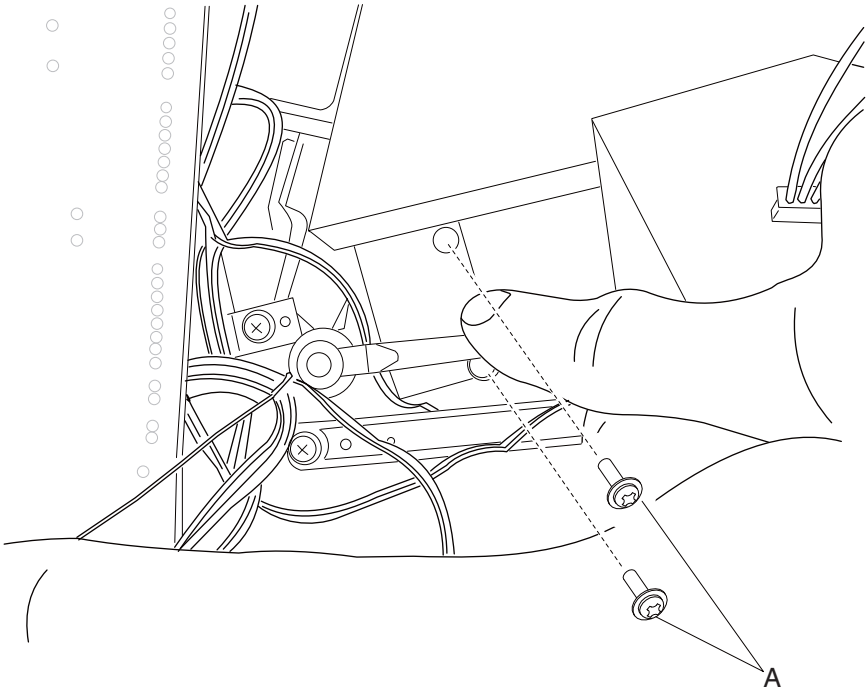

3 Disconnect the harness and remove.

Sensor (MFP stapler assembly bin full receive) removal

1 Remove the right cover. Go to **“MFP stapler assembly right cover removal” on page 485**.

2 Remove the two screws (A) securing the sensor (bin full receive).

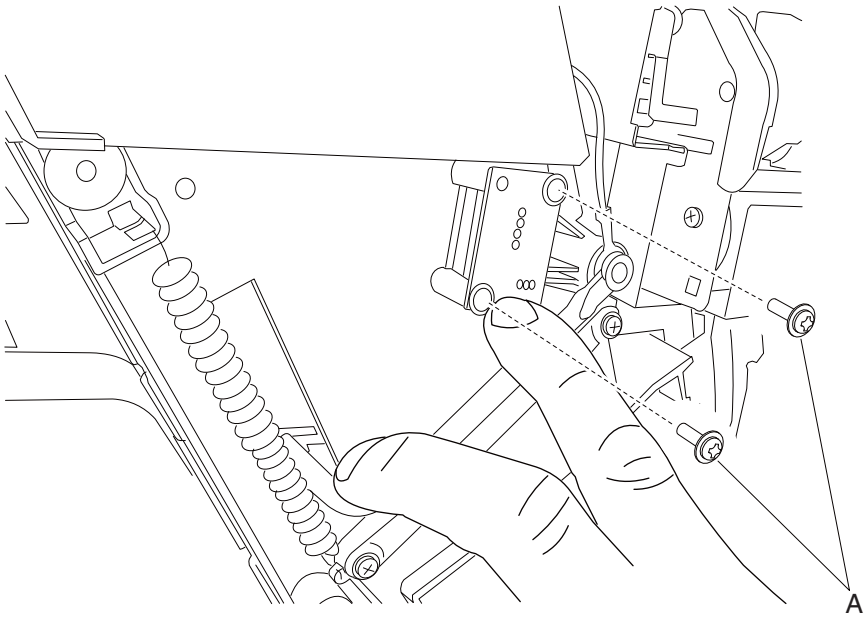

3 Disconnect the harness and remove.

Sensor (MFP stapler assembly media in stapler) removal

1 Remove the stapler unit assembly. Go to **"MFP stapler assembly stapler unit assembly removal" on page 494**.

2 Using a flat-blade screwdriver, release the tabs (A) securing the sensor.

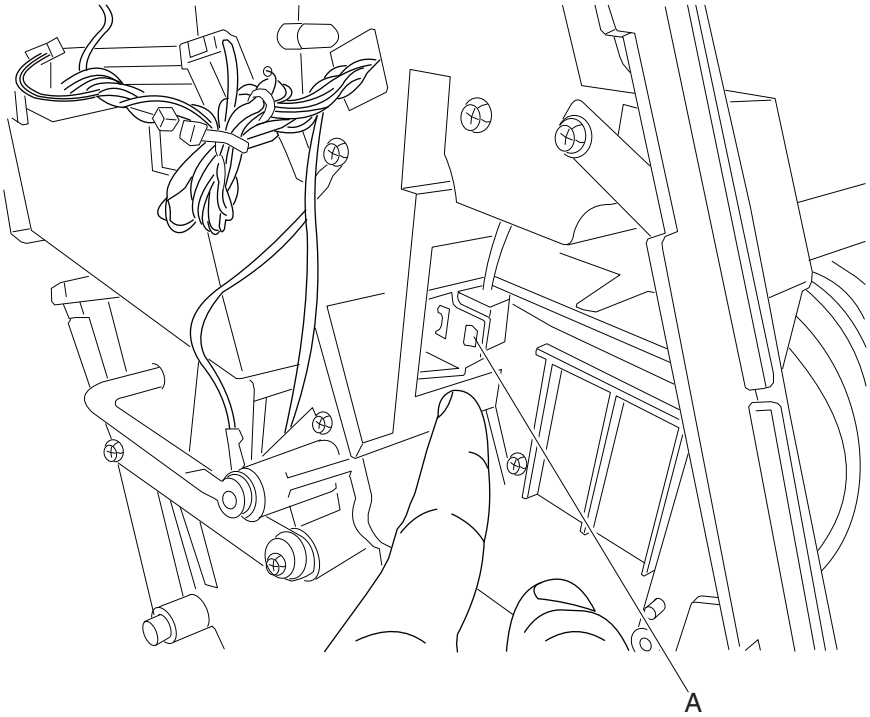

3 Using needlenose pliers, carefully grip the sensor and pull it out and disconnect the harness.

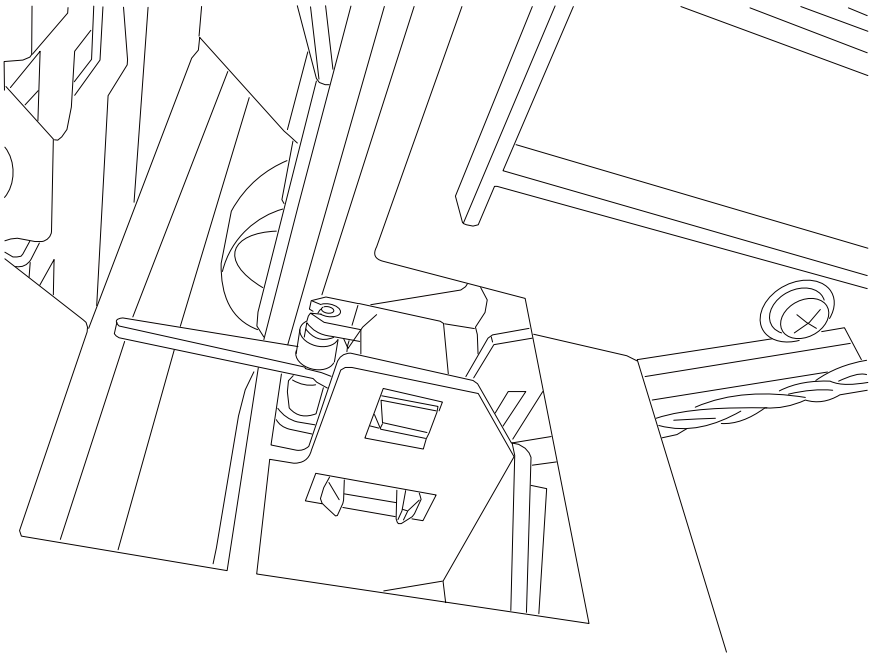

Installation note: Using needlenose pliers, place the rear most tab in the sensor bracket first. Then push on the rear face of the sensor until the other two tabs snap into place.

Sensor (MFP stapler assembly deflector HP) removal

1 Remove the left cover. Go to **“MFP stapler assembly left cover removal” on page 486**.

2 Disconnect the harness to the sensor (deflector HP).

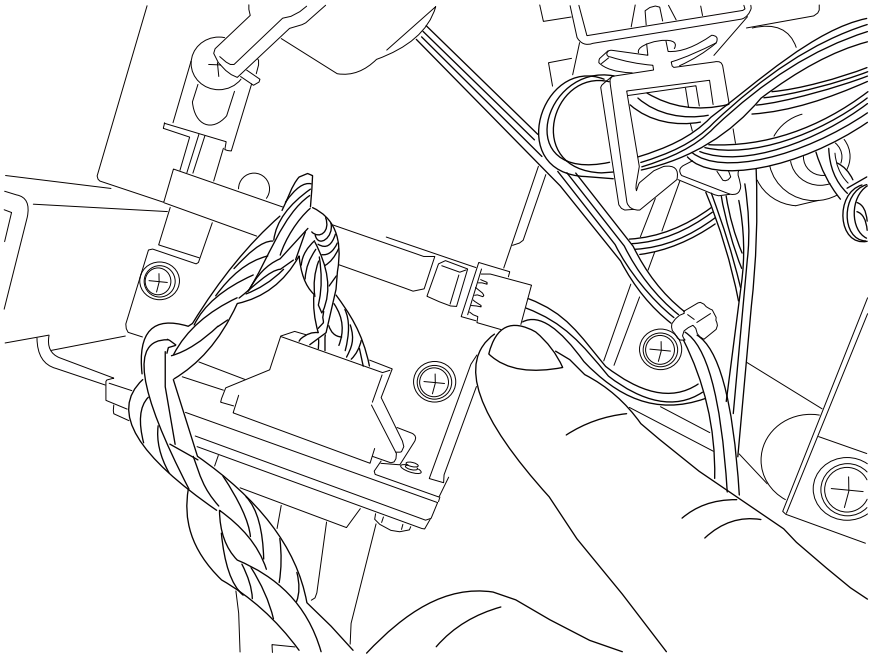

3 Release the tabs (A) securing the sensor to the unit.

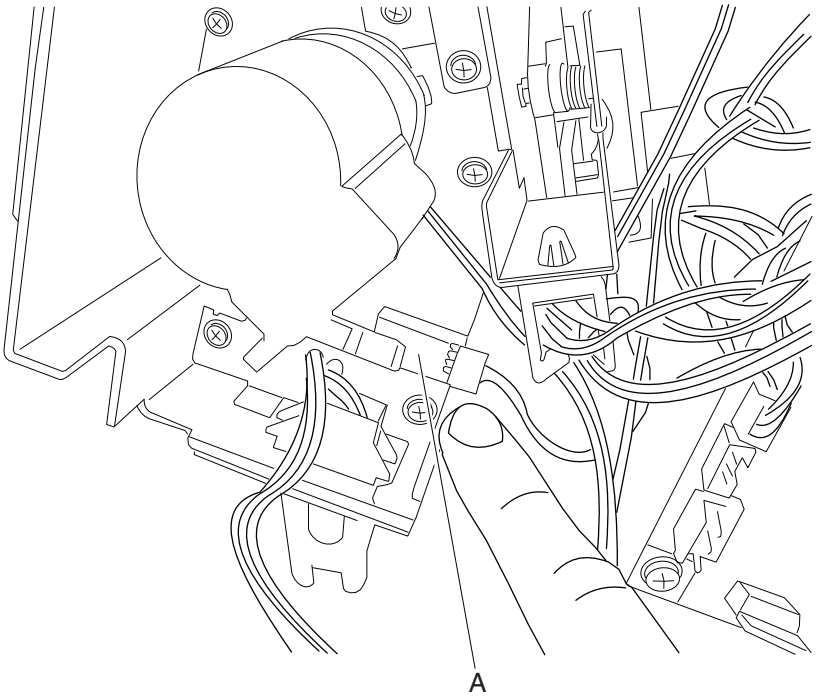

Note: The tabs may be difficult to access. The use of a spring hook or flat-blade screwdriver may be necessary to release the tabs.

Stapler/stacker controller card assembly removal

1 Remove the left cover. Go to **"MFP stapler assembly left cover removal" on page 486**.

2 Disconnect all harnesses to the controller card.

3 Remove the three screws (A) securing the stapler/stacker controller card assembly.

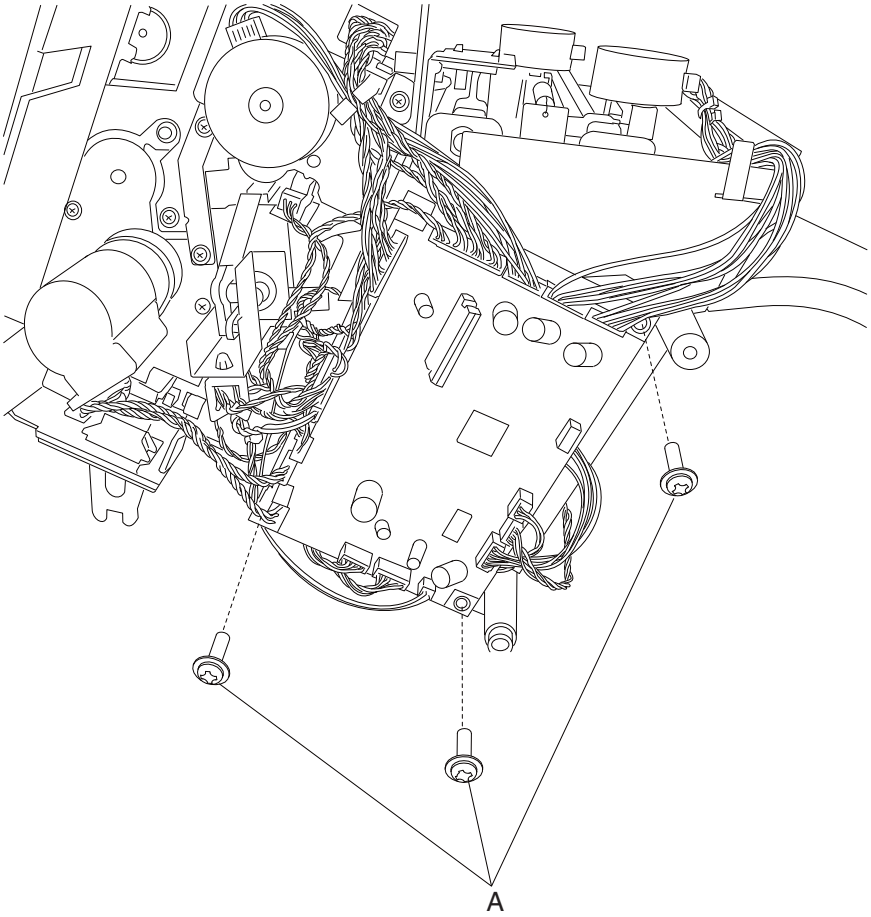

4 Remove the stapler/stacker controller card assembly.

Scanner removals

Scanner CCD assembly removal

CAUTION—POTENTIAL INJURY: When you see this symbol, there is a danger from hazardous voltage in the area of the product where you are working. Unplug the product before you begin, or use caution if the product must receive power in order to perform the task.

1 Remove the scanner platen glass cover assembly. Go to **"Scanner platen glass cover assembly removal (models X651, X652, X654, and X656)" on page 527** or **"Scanner platen glass cover assembly removal (model X658)" on page 527**.

2 Loosen the screw (A) on the carriage belt tensioner.

3 Pull slack in the carriage belt, and retighten screw (A).

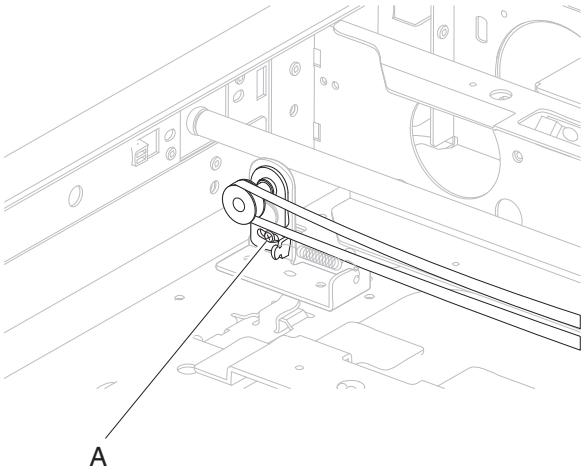

4 Slide the carriage belt out of the rear of the scanner CCD assembly.

5 Remove the rear CCD scanner shaft (B) from the flatbed frame by lifting the left end of the shaft up and remove through the left side.

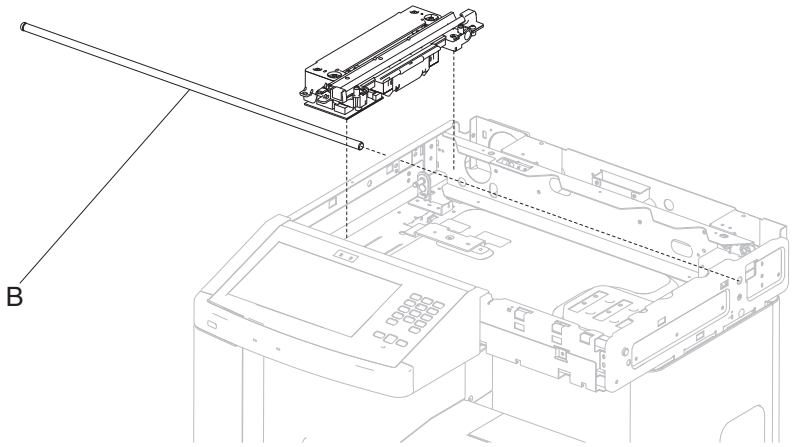

6 Lift the scanner CCD assembly from the front shaft.

7 Rotate the scanner CCD assembly upside down, and then carefully remove the ribbon cable.

8 Remove the scanner CCD assembly.

Installation note: When reinstalling the scanner CCD assembly, make sure to adjust the skew. Go to **"Adjusting skew" on page 291**.

Scanner/ADF duplex CCD exposure lamp removal

1 Remove the scanner CCD assembly or the ADF duplex CCD assembly. Go to **"Scanner CCD assembly removal" on page 504** or **"ADF duplex CCD assembly removal (models X654, X656, and X658)" on page 543**.

2 Remove the three screws (A) securing the scanner exposure lamp and wire harness.

3 Remove the lamp reflector (B) from the CCD assembly.

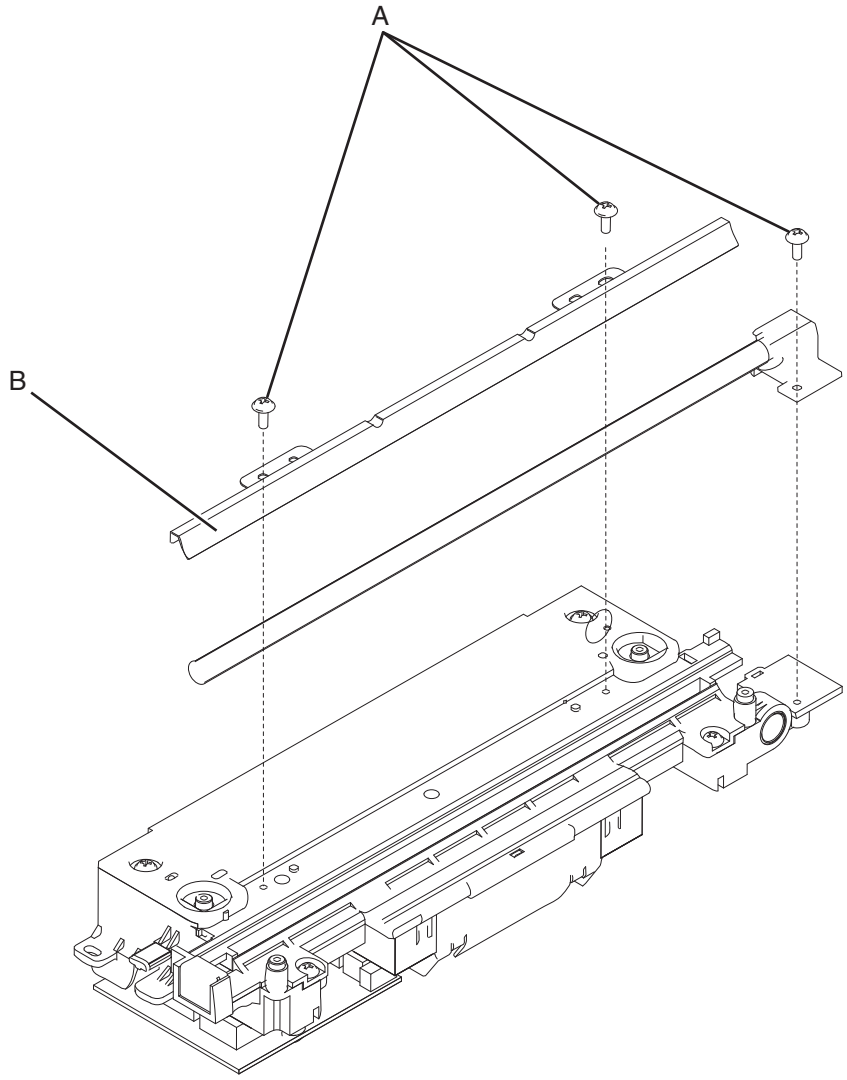

4 Remove the two screws (C) securing the exposure lamp card from the underside of the CCD assembly, and lift the card from the CCD assembly.

5 Disconnect the scanner lamp wiring harness from the exposure lamp card.

6 Remove the scanner exposure lamp wiring harness from the clips (D) on the CCD assembly.

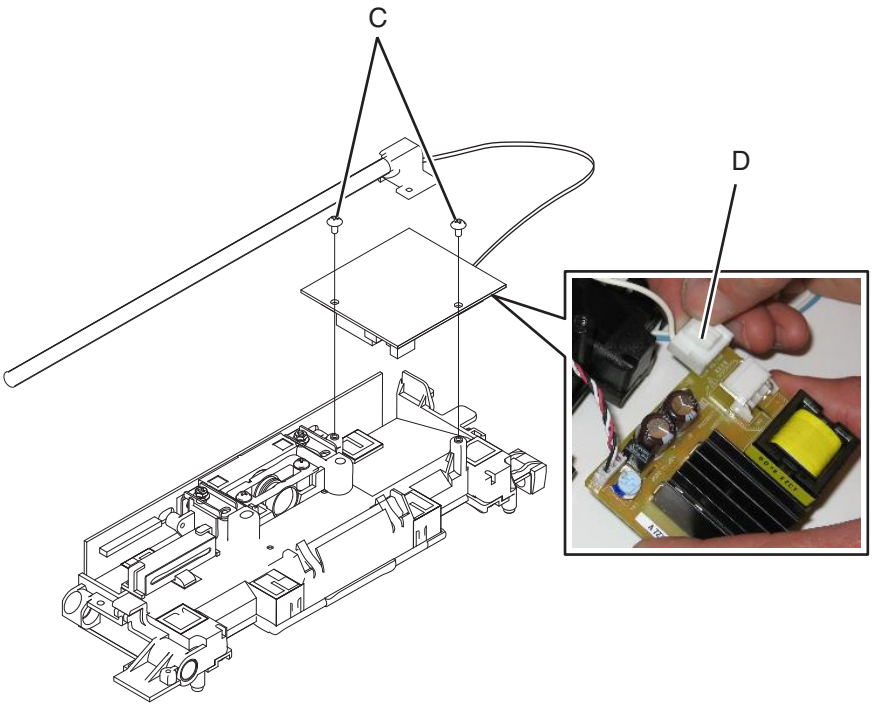

7 Remove the scanner exposure lamp by lifting up on the rear end and pulling the lamp out of the grommet.

Scanner reference LED cable assembly removal

1 Remove the scanner platen glass cover assembly. Go to **"Scanner platen glass cover assembly removal (models X651, X652, X654, and X656)" on page 527** or **"Scanner platen glass cover assembly removal (model X658)" on page 527**.

2 Remove the screw (A) securing the scanner reference LED cable assembly to the flatbed frame.

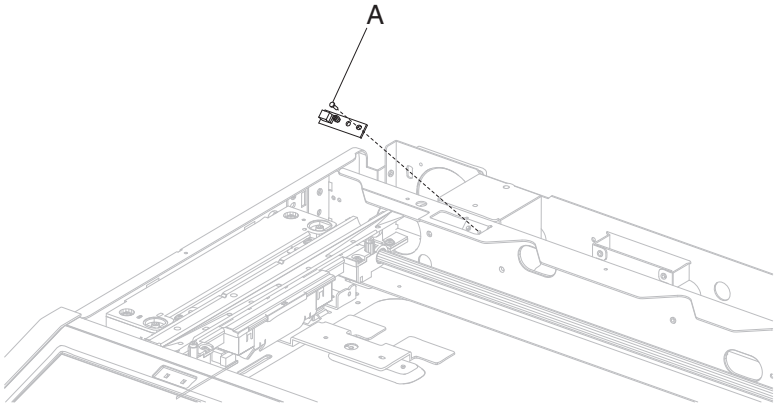

3 Remove the scanner reference LED cable assembly.

4 Remove the wire harness from the scanner reference LED cable assembly.

Scanner interface card assembly removal

1 Remove the scanner rear cover. Go to **“Scanner rear cover removal” on page 522**.

2 Remove the wire harness from the scanner interface card.

3 Remove the four screws (A) securing the scanner interface card to the flatbed frame.

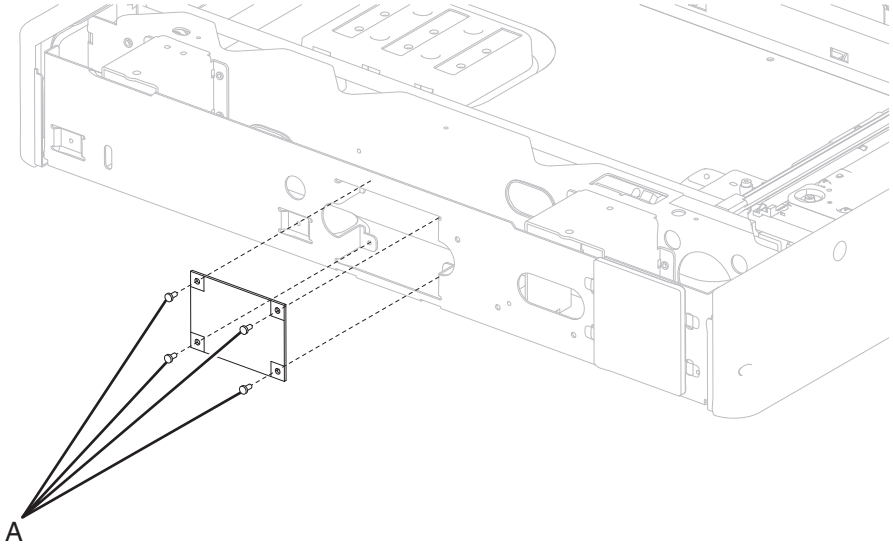

4 Remove the scanner interface card.

Scanner cooling fan filter removal

1 Pry the tabs (A) securing the scanner cooling fan filter cover to the flatbed frame.

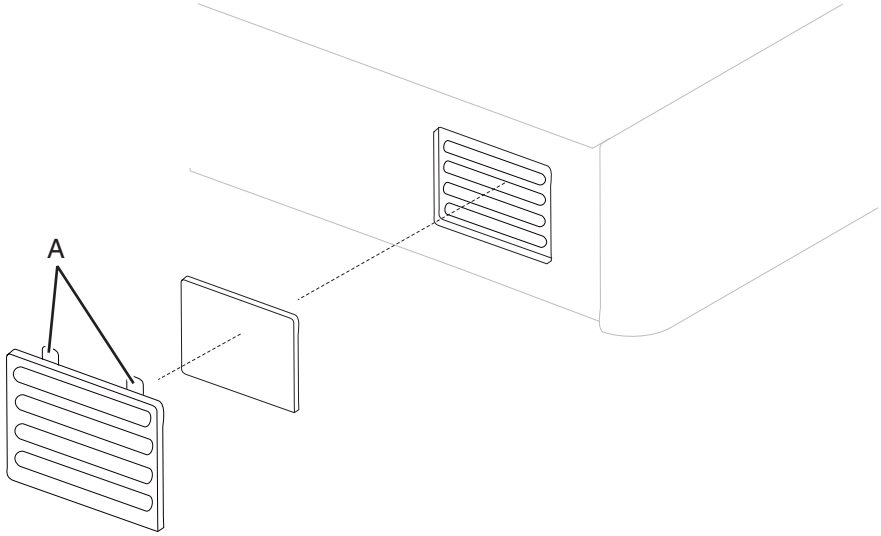

2 Remove the filter.

Scanner cooling fan removal

1 Remove the scanner platen glass cover assembly. Go to **“Scanner platen glass cover assembly removal (models X651, X652, X654, and X656)” on page 527** or **“Scanner platen glass cover assembly removal (model X658)” on page 527**.

2 Disconnect the cooling fan wiring harness from the scanner interface card connector (CN5) assembly.

3 Remove the two screws (A) securing the scanner cooling fan to the flatbed frame.

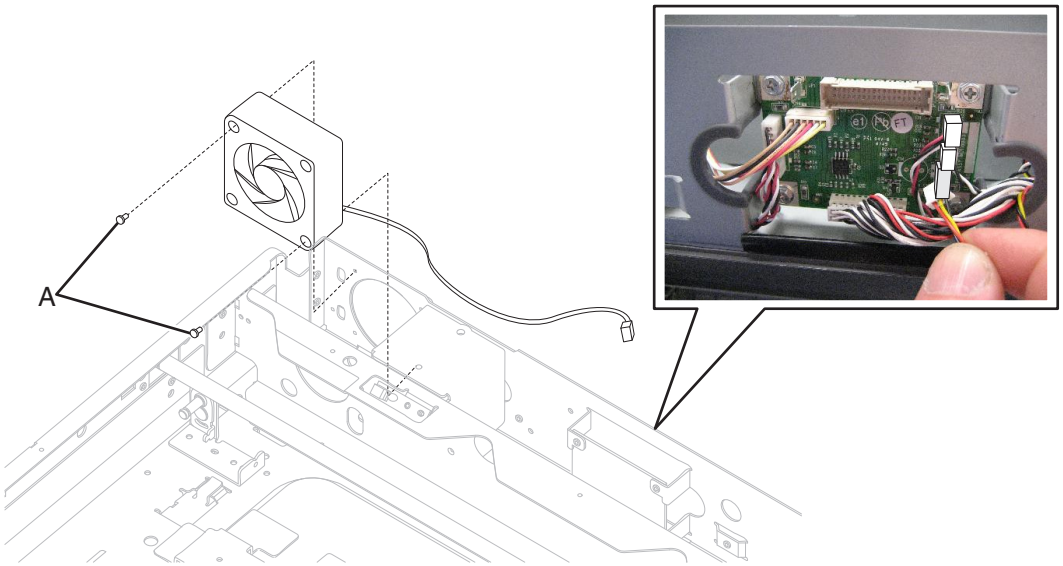

4 Remove the scanner cooling fan while carefully routing the cable out from the flatbed frame assembly.

Scanner support right rear cover removal (model X658)

1 Remove the four screws (A) securing the scanner support right rear cover to the machine.

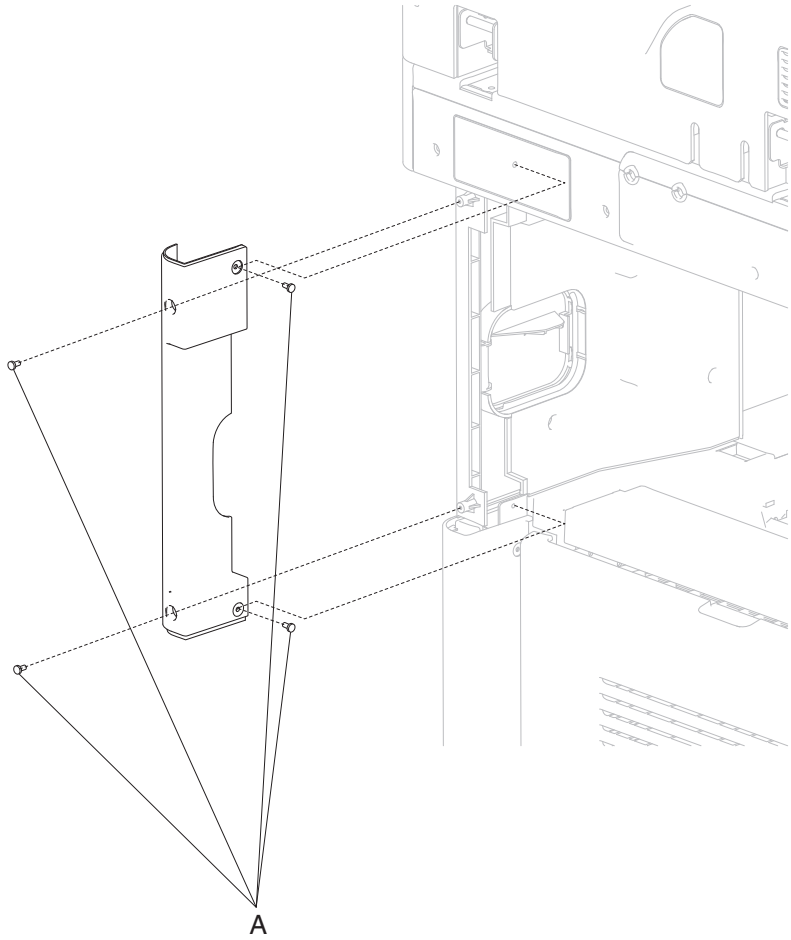

2 Remove the scanner support right rear cover.

Scanner support right inner cover removal (model X658)

1 Remove the scanner support right rear cover. Go to **"Scanner support right rear cover removal (model X658)" on page 510**.

2 Remove the four screws (A) securing the scanner support right inner cover to the machine.

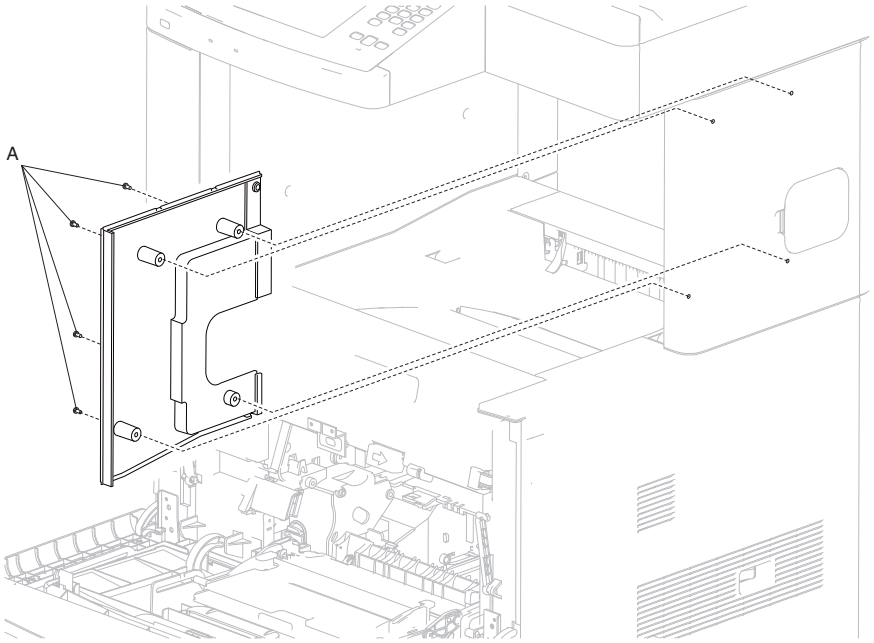

3 Pull the bottom out, and then remove the scanner support right inner cover.

Scanner support right cover removal (model X658)

1 Remove the scanner support right inner cover. Go to **“Scanner support right inner cover removal (model X658)” on page 511**.

2 Remove the four screws (A) securing the scanner support right cover to the machine.

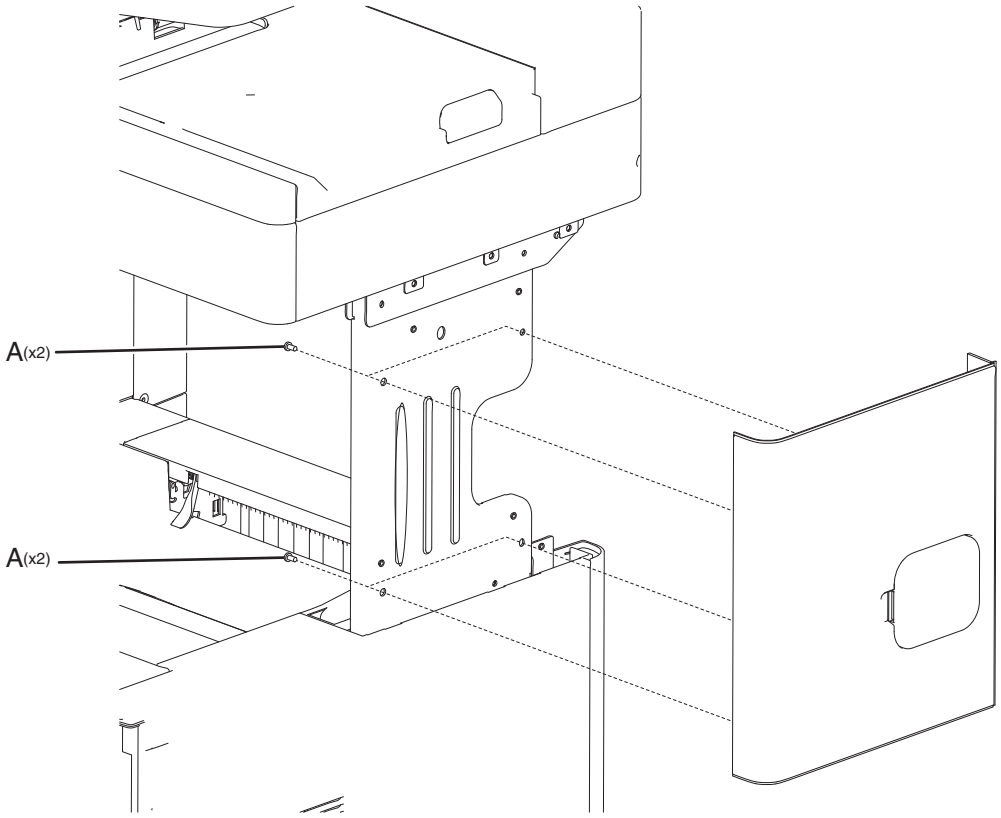

3 Remove the scanner support right cover.

Scanner support left rear cover removal (model X658)

1 Remove the scanner rear cover. Go to **"Scanner rear cover removal" on page 522**.

2 Remove the two inner screws (A) and two screws (B) on the rear face securing the scanner support left rear cover to the machine.

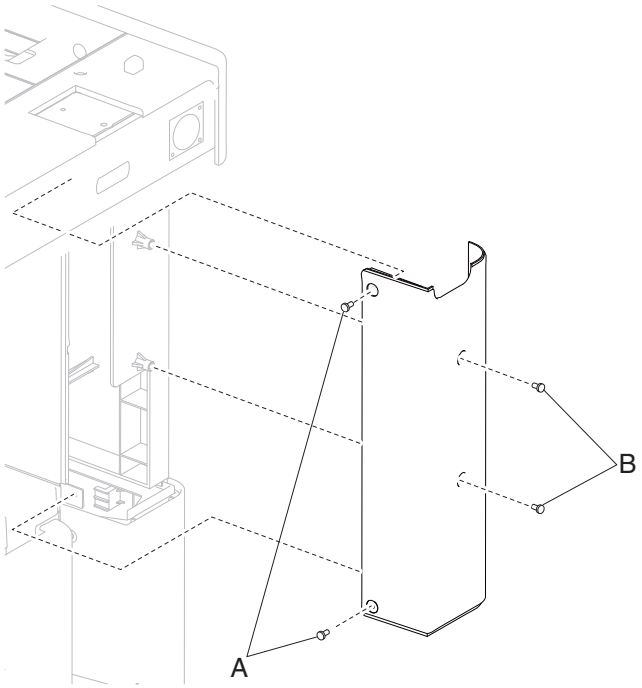

3 Remove the scanner support left rear cover.

Scanner support left front cover removal (model X658)

1 Open the front door assembly.

2 Remove the two screws (A) on the scanner support left front cover to the machine.

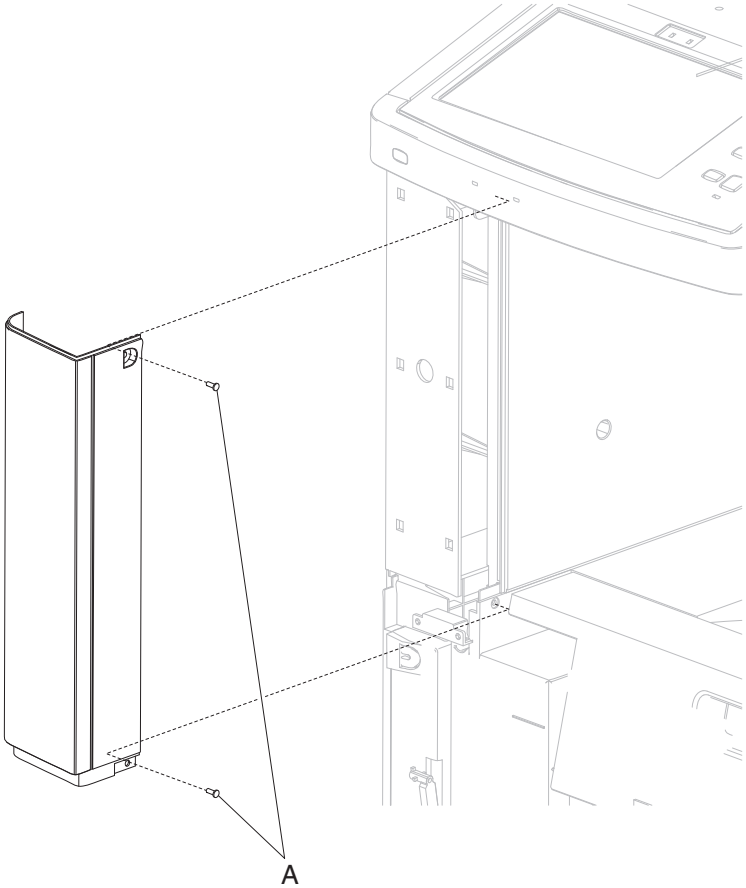

3 Remove the scanner support left front cover .

Scanner support left cover removal (model X658)

1 Remove the scanner support left rear cover. Go to **"Scanner support left rear cover removal (model X658)" on page 513**.

2 Remove the scanner support left front cover. Go to **"Scanner support left front cover removal (model X658)" on page 514**.

3 Remove the four screws (A) from the inside panel.

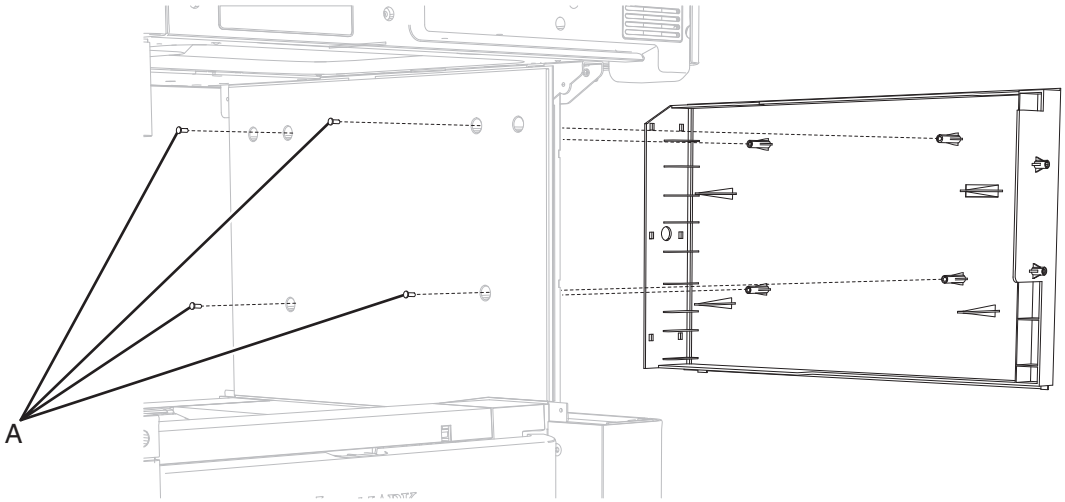

4 Remove the scanner support left cover.

Scanner support left inner cover removal (model X658)

1 Remove the scanner support left rear cover. Go to **"Scanner support left rear cover removal (model X658)" on page 513**.

2 Remove the scanner support left front cover. Go to **"Scanner support left front cover removal (model X658)" on page 514**.

3 Remove the scanner support left cover. Go to **"Scanner support left cover removal (model X658)" on page 514**.

4 Remove the two screws (A) securing the scanner support left inner cover.

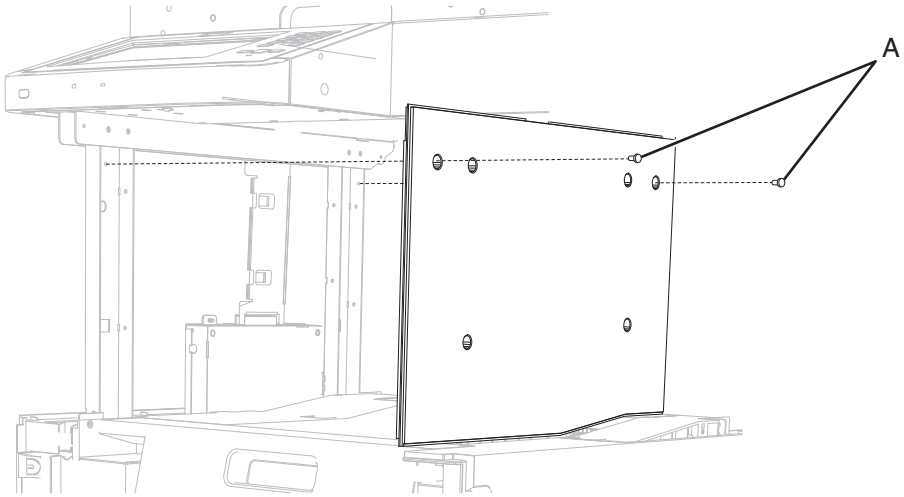

5 Slide the scanner support left inner cover to the front, and then remove.

Sensor (platen glass length) assembly removal

1 Remove the scanner platen glass cover assembly. Go to **"Scanner platen glass cover assembly removal (models X651, X652, X654, and X656)" on page 527** or **"Scanner platen glass cover assembly removal (model X658)" on page 527**.

2 Remove the two screws (A) securing the sensor (platen glass length) assembly to the scanner flatbed frame.

3 Remove the screw (B) securing the sensor (platen glass length) cable cover.

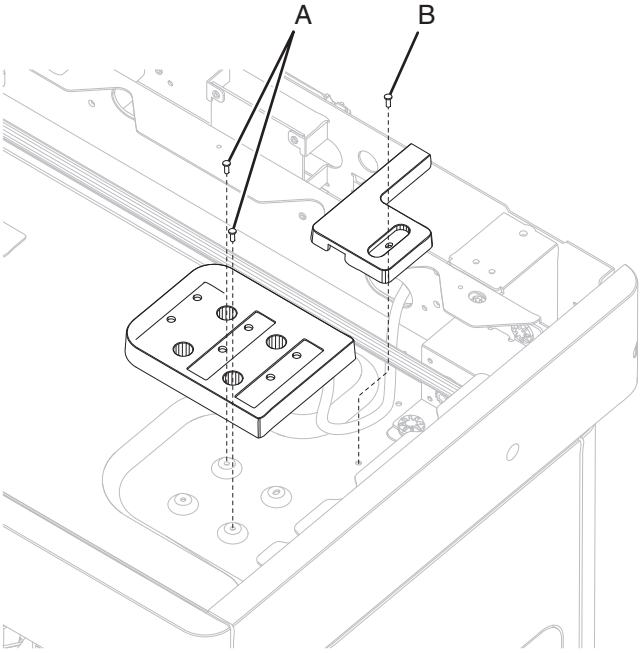

4 Rotate the sensor (platen glass length) assembly upside down, and remove the harness from each individual sensor.

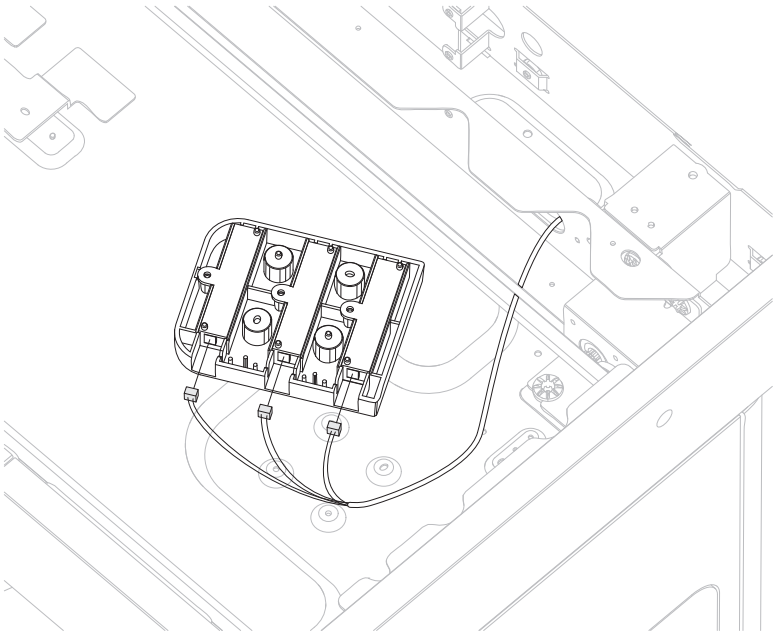

5 Remove the sensor (platen glass length) assembly.

Sensor (scanner HP) assembly with bracket removal

1 Remove the scanner platen glass cover assembly. Go to **"Scanner platen glass cover assembly removal (models X651, X652, X654, and X656)" on page 527** or **"Scanner platen glass cover assembly removal (model X658)" on page 527**.

2 Remove the screw (A) securing the HP sensor bracket to the flatbed frame.

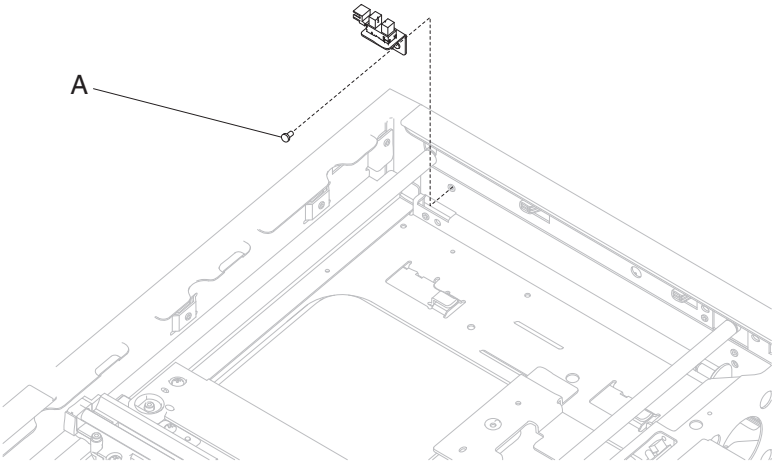

3 Pull the bracket from the frame, and then remove the sensor wire harness.

4 Remove the sensor (scanner HP) assembly with bracket.

Scanner controller card assembly removal (model X658)

1 Remove the scanner support left cover. Go to **"Scanner support left cover removal (model X658)" on page 514**.

2 Remove the left side cover. Go to **"Left side cover removal (model X658)" on page 318**.

3 Remove the eight screws (A) securing the scanner controller card cage cover to the cage.

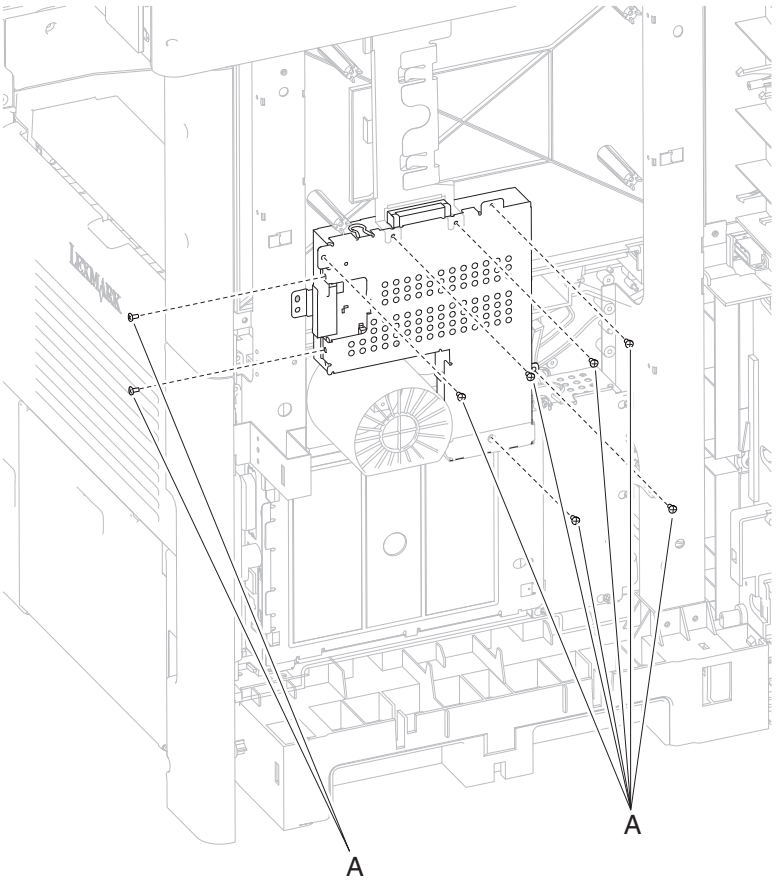

4 Remove the scanner controller card cage cover.

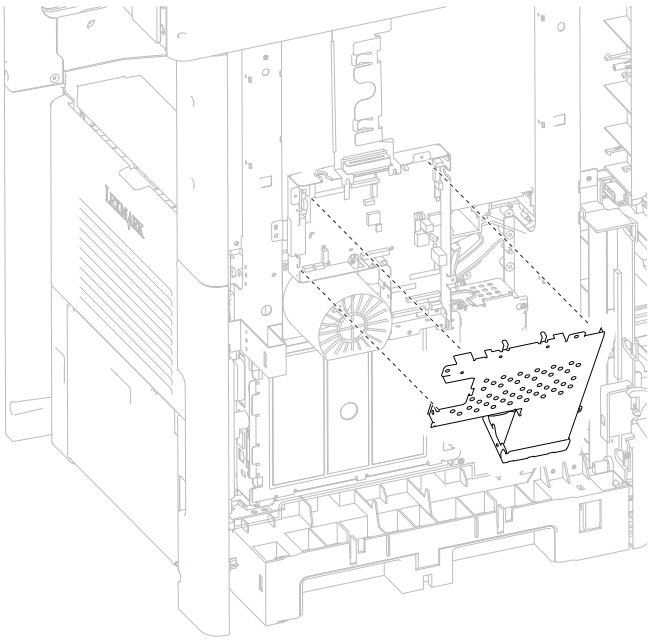

5 Disconnect all the harnesses and ribbon cables.

6 Remove the seven screws (B) securing the card to the cage.

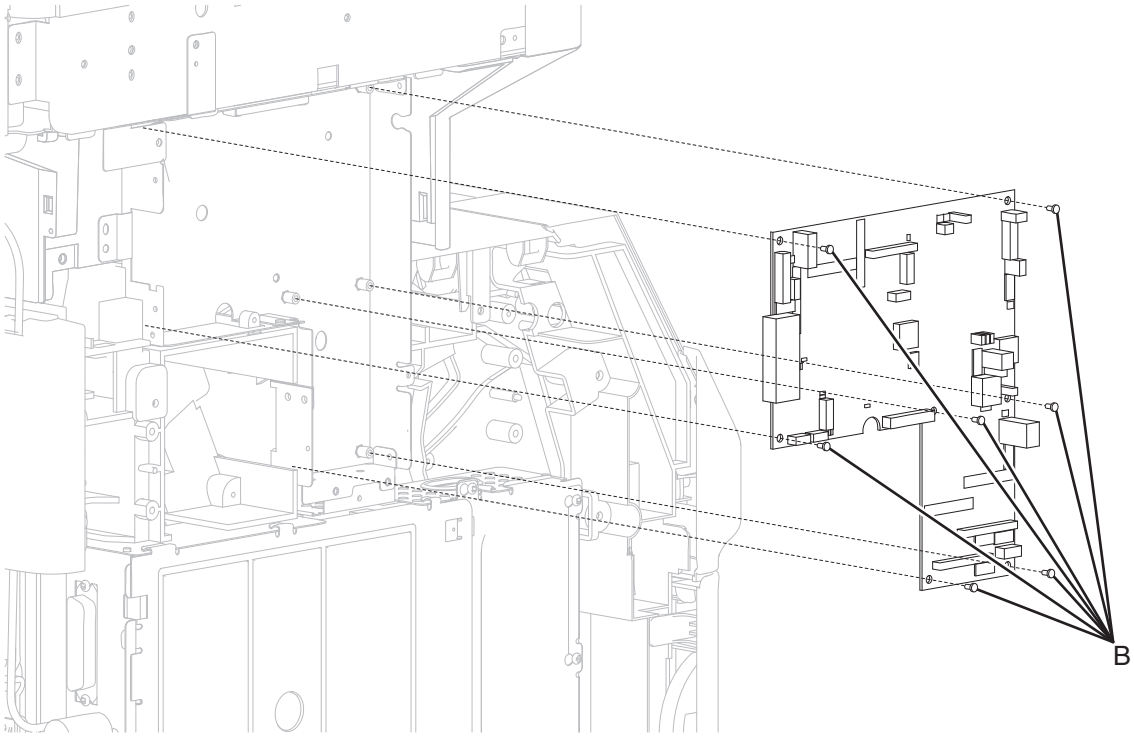

7 Remove the scanner controller card.

Scanner controller card assembly removal (models X651, X652, X654, and X656)

1 Remove the left side cover. Go to **"Left side cover removal (models X651, X652, X654, and X656)" on page 317**.

2 Remove the eight screws (A) securing the scanner controller card cage cover to the cage.

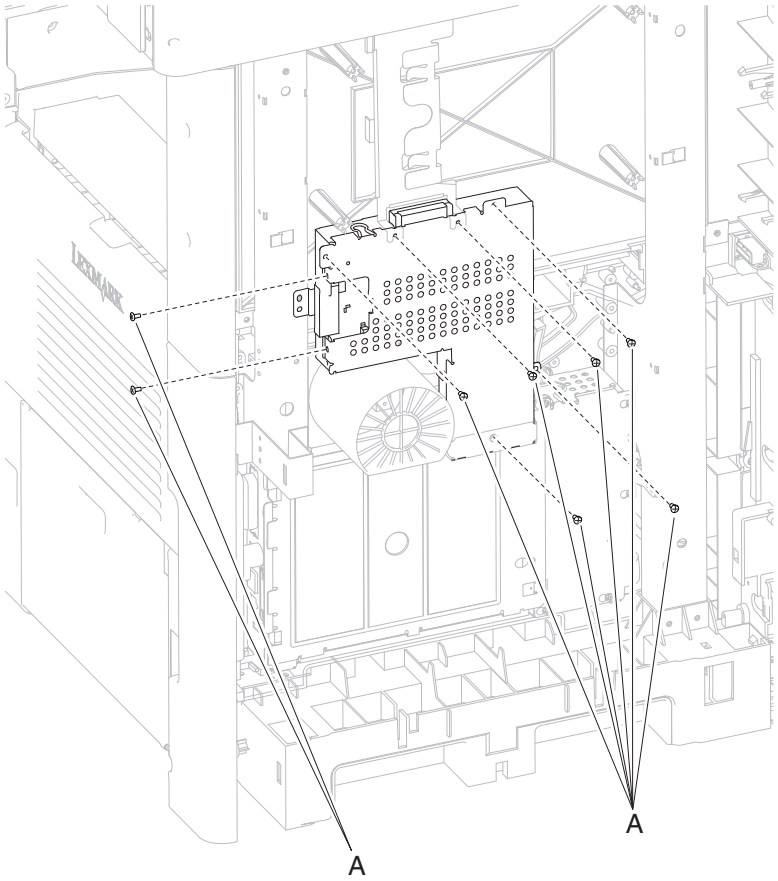

3 Remove the scanner controller card cage cover.

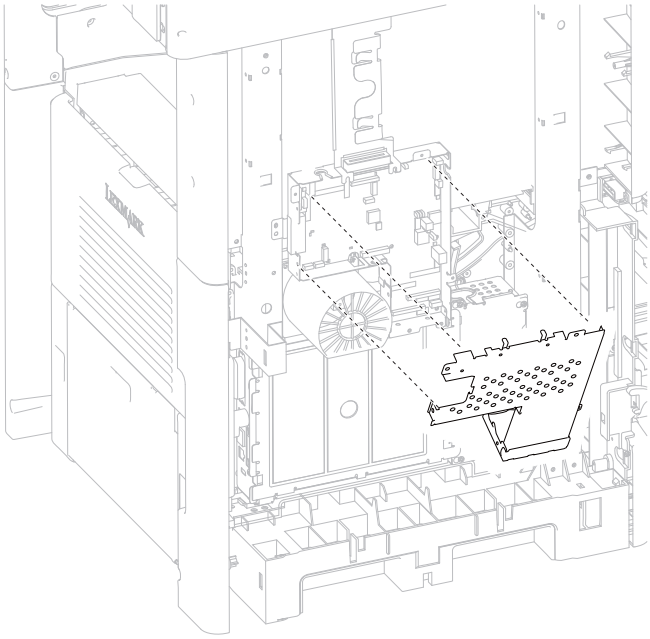

4 Disconnect all the harnesses and ribbon cables.

5 Remove the seven screws (B) securing the card to the cage.

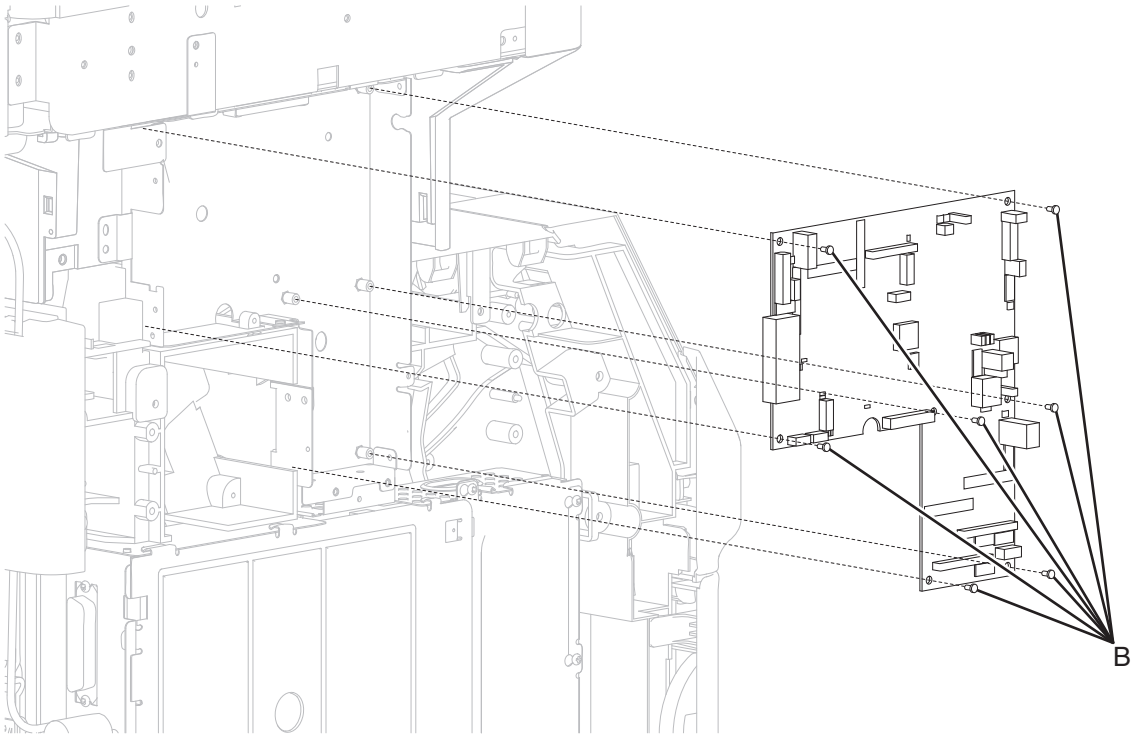

6 Remove the scanner controller card.

Scanner rear cover removal

1 Remove the four screws (A) securing the scanner rear cover to the scanner.

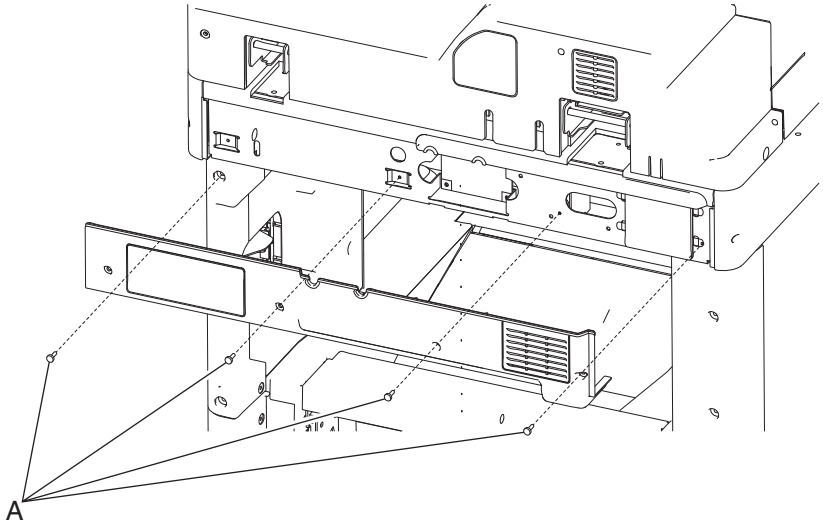

2 Pull out from the bottom, and then remove the scanner rear cover.

Scanner left cover removal (models X651, X652, X654, and X656)

1 Remove the scanner rear cover. Go to **"Scanner rear cover removal" on page 522**.

2 Remove the metal screw (A) and plastic screw (B) securing the scanner left cover to the scanner assembly.

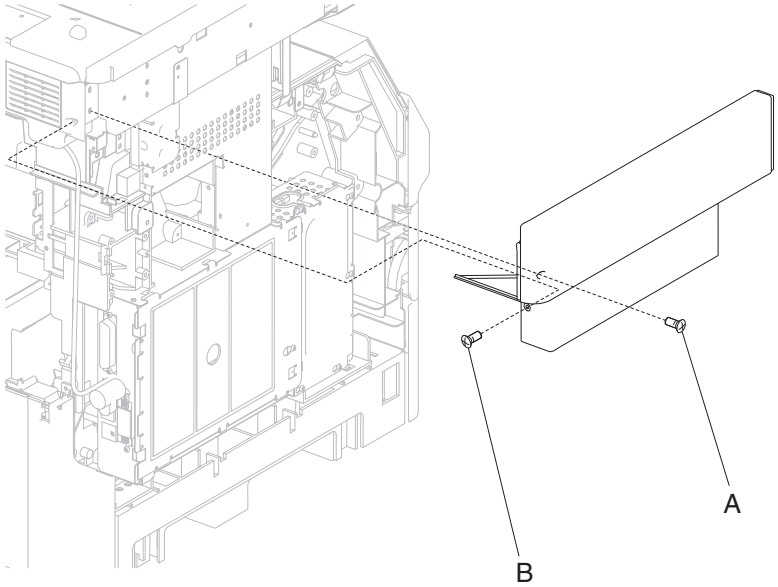

3 Slide the scanner left cover to rear, and then remove.

Scanner left cover removal (model X658)

1 Remove the scanner rear cover. Go to **“Scanner rear cover removal” on page 522**.

2 Remove the metal screw (A) securing the scanner left cover to the scanner assembly.

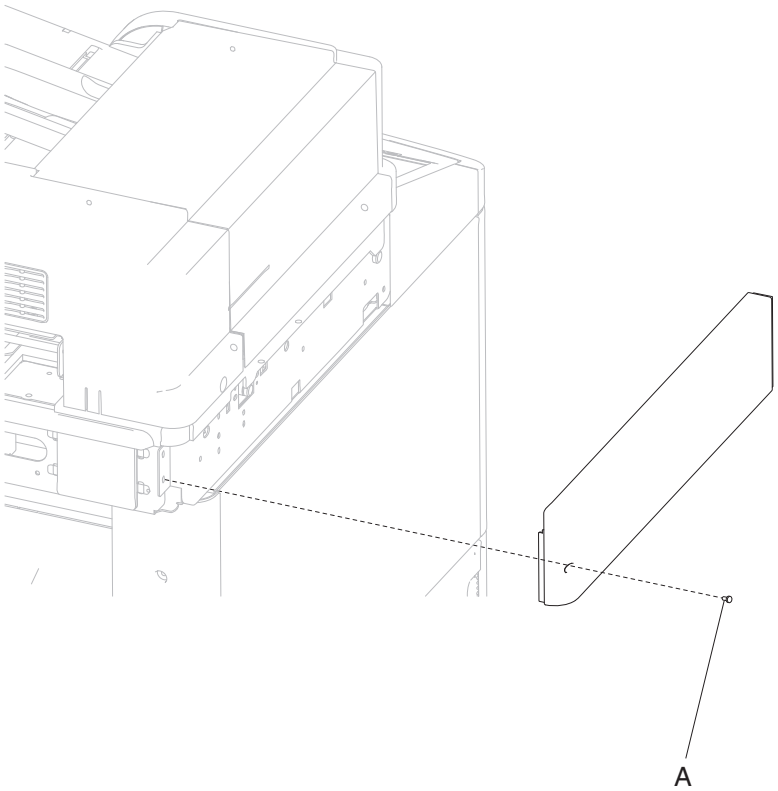

3 Slide the scanner left cover to rear, and then remove.

Scanner right cover removal (models X651, X652, X654, and X656)

1 Remove the scanner rear cover. Go to **"Scanner rear cover removal" on page 522**.

2 Remove the plastic screw (A) and metal screw (B) securing the scanner right cover to the scanner.

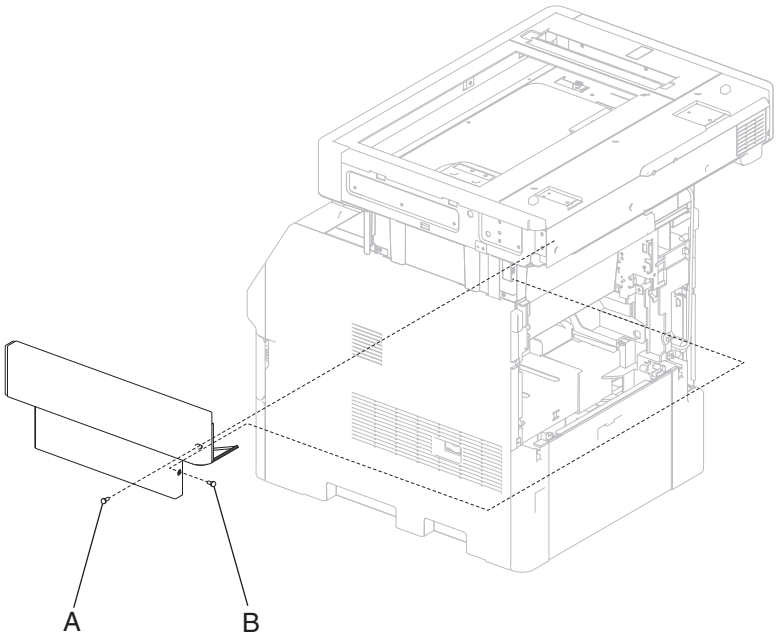

3 Slide the scanner right cover to rear, and then remove.

Scanner right cover removal (model X658)

1 Remove the scanner rear cover. Go to **"Scanner rear cover removal" on page 522**.

2 Remove the plastic screw (A) securing the scanner right cover to the machine.

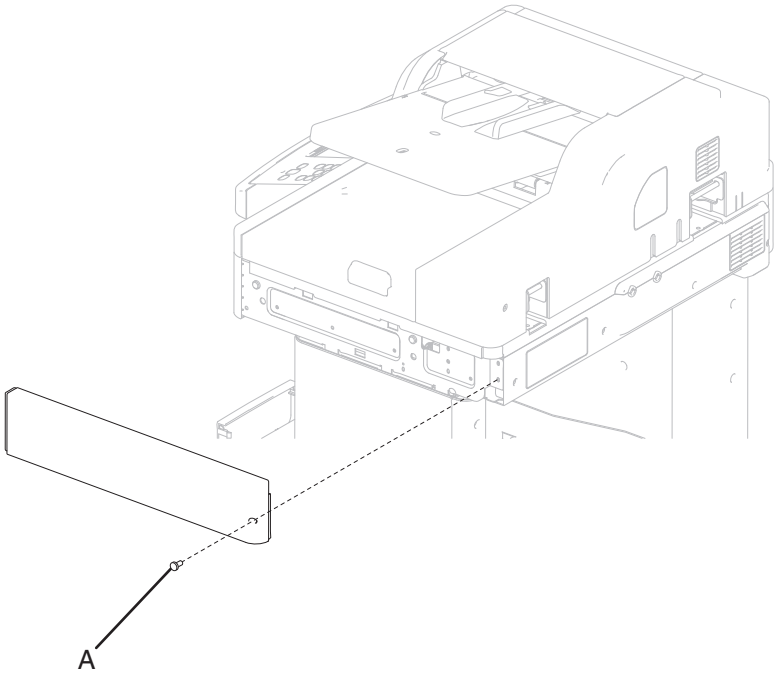

3 Slide the scanner right cover to rear, and then remove.

Scanner front cover removal (models X651, X652, X654, and X656)

1 Open the ADF cover.

2 Firmly grasp one side of the scanner front cover.

3 Pull and remove the scanner front cover.

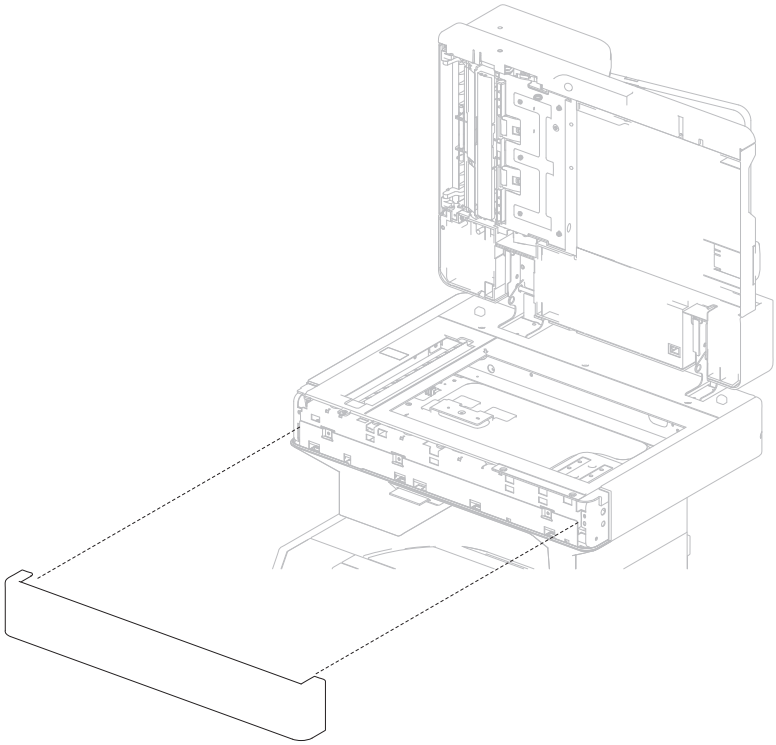

Scanner front cover removal (model X658)

1 Remove the scanner right cover. Go to **"Scanner right cover removal (model X658)" on page 525**.

2 Remove the screw (A).

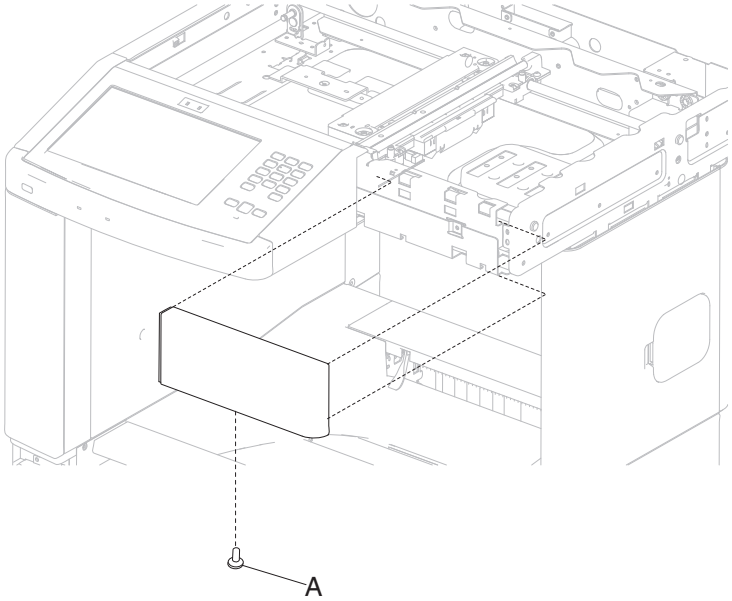

3 Slide the scanner front cover to the right, and then remove.

Scanner platen glass cover assembly removal (model X658)

1 Remove the ADF unit assembly. Go to **"ADF unit assembly removal (model X658)" on page 561**.

2 Remove the scanner left cover. Go to **"Scanner left cover removal (model X658)" on page 523**.

3 Remove the scanner right cover. Go to **"Scanner right cover removal (model X658)" on page 525**.

4 Remove the scanner front cover. Go to **"Scanner front cover removal (model X658)" on page 526**.

Notes:

- Remove the operator panel screw cover strip to access the sixth screw securing the scanner platen glass cover assembly.
- It is not necessary to remove the operator panel for platen glass removal.

5 Remove the six screws (A) securing the scanner platen glass cover to the assembly.

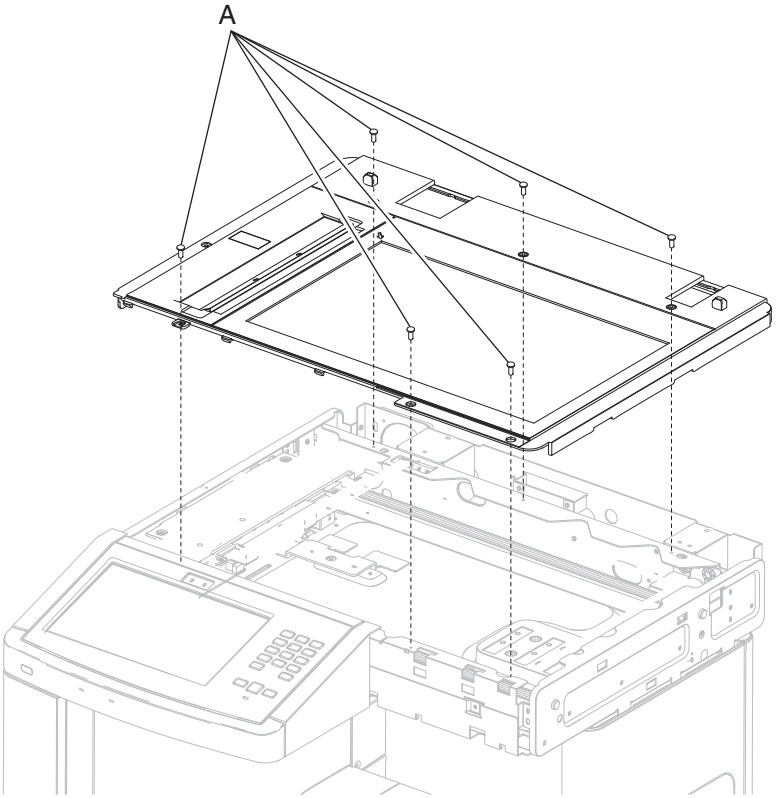

6 Lift and remove the scanner platen glass cover assembly.

Scanner platen glass cover assembly removal (models X651, X652, X654, and X656)

1 Remove the ADF unit assembly. Go to **"ADF unit assembly removal (models X651, X652, X654, and X656)" on page 560**.

2 Remove the scanner front cover. Go to **"Scanner front cover removal (models X651, X652, X654, and X656)" on page 525**.

3 Remove the scanner right cover. Go to **“Scanner right cover removal (models X651, X652, X654, and X656)” on page 524**.

4 Remove the six screws (A) securing the scanner platen glass cover to the assembly.

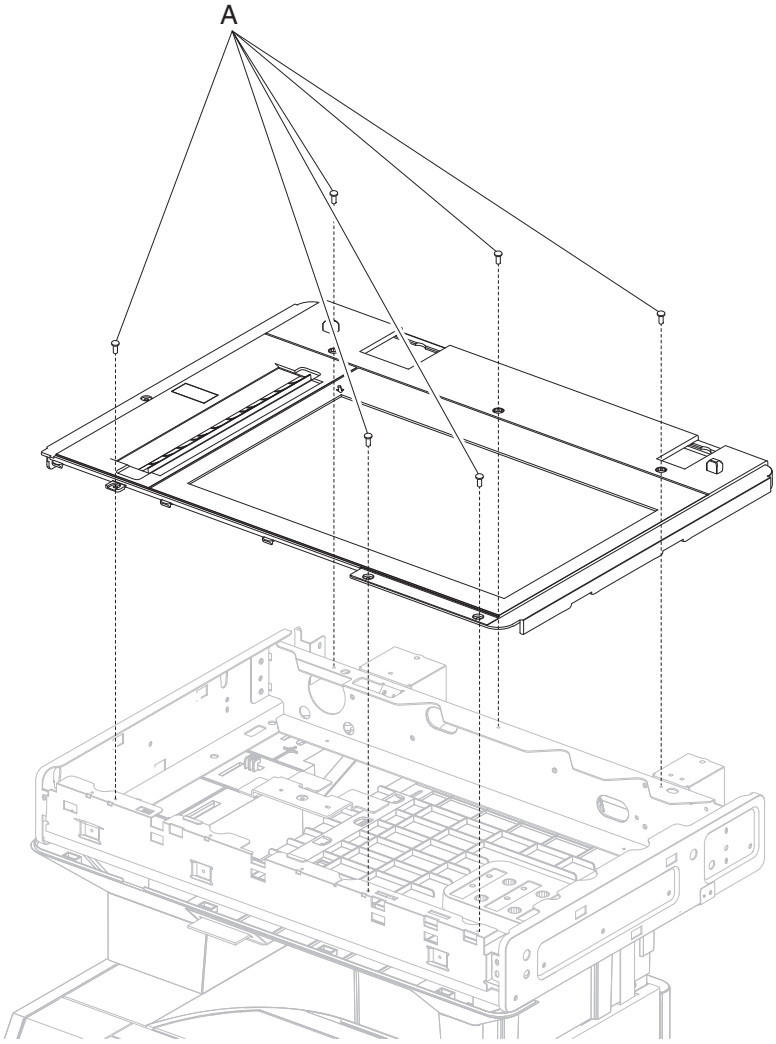

5 Lift and remove the scanner platen glass cover assembly.

Scanner support platform removal (models X651, X652, X654, and X656)

1 Remove the scanner platen glass cover assembly. Go to **“Scanner platen glass cover assembly removal (models X651, X652, X654, and X656)” on page 527**.

2 Remove the six screws (A) securing the scanner support platform to the scanner flatbed frame.

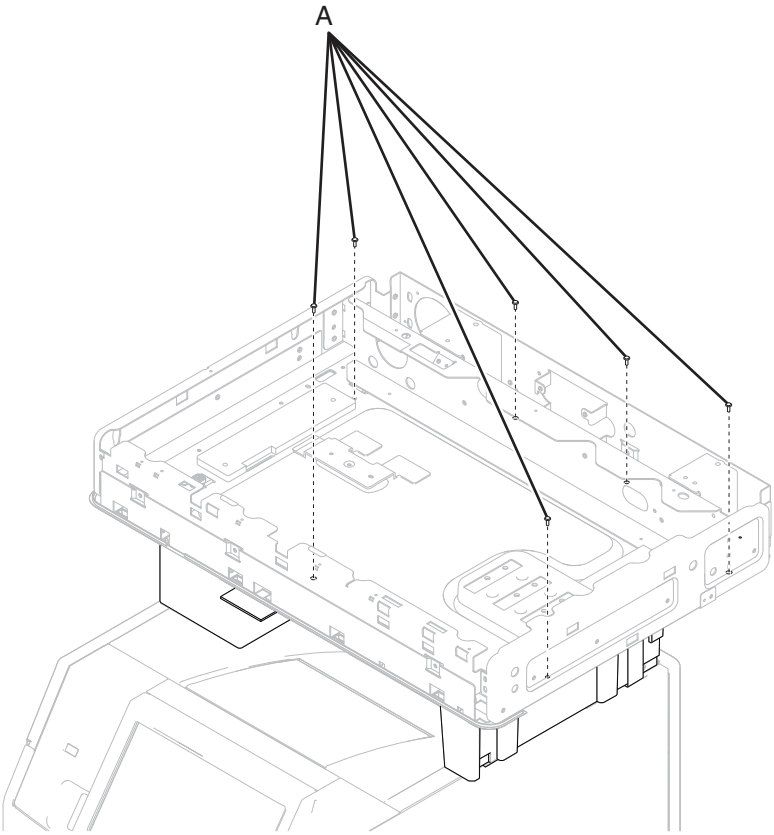

3 Remove the two screws (B) securing the plastic cover to the scanner flatbed frame.

4 Remove the last screw (C) under the plastic cover securing the scanner support platform to the scanner.

5 Remove the torroid from the ribbon cable.

6 Remove the two screws (D) securing the ground straps to the either side of the scanner frame.

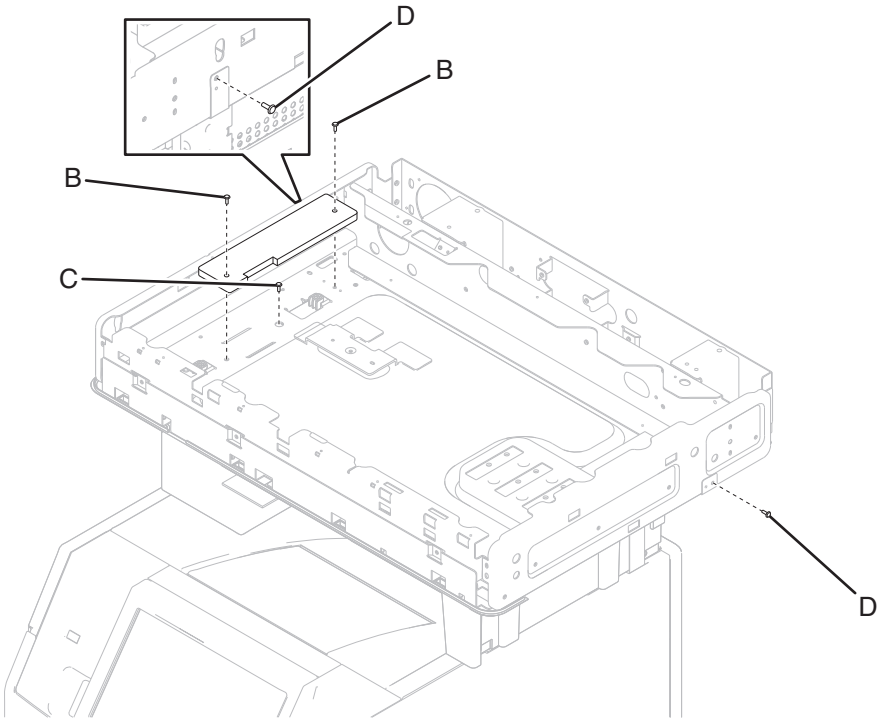

Note: Remove the ground strap to prevent damage to the surface which the scanner is placed on.

7 Push the flatbed toward the rear of the cover.

8 Lift and remove the scanner support platform.

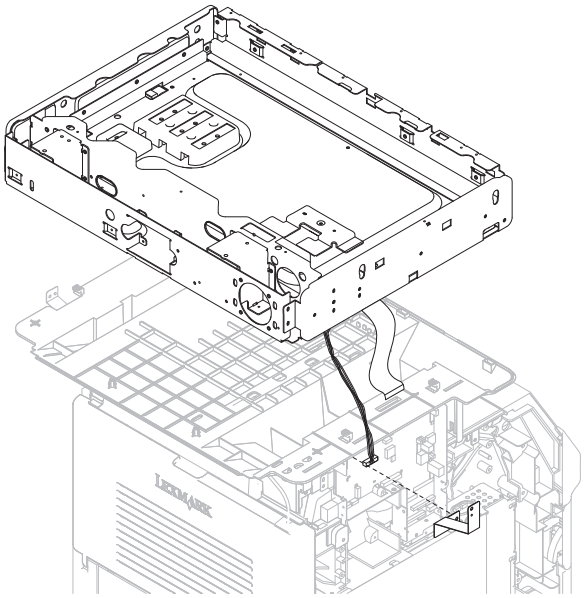

9 If the scanner support platform needs to be removed from the printer, remove the four mounting screws as outlined in the scanner unit assembly removal. Go to **"Scanner unit assembly removal (models X651, X652, X654, and X656)" on page 531**.

Scanner unit assembly removal (models X651, X652, X654, and X656)

Warning—Potential Damage: When replacing the system card assembly and the operator panel assembly, make sure to:

- Replace only one component at a time.
- Perform a POR every after each component is replaced.

If this procedure is not followed, then the printer will be rendered inoperable.

These components can be used as a method of troubleshooting as long as the machine is booted into diagnostic mode or is operating in diagnostic mode. Once a component has been installed in a machine and powered up into user mode, it cannot be used in another machine. It must be returned to the manufacturer.

1. Remove the ADF unit assembly. Go to **"ADF unit assembly removal (models X651, X652, X654, and X656)" on page 560**.
2. Remove the scanner controller card cage cover.
3. Remove all cables.
4. Remove the two plastic screws (A) and screw (B) securing the ground strap to the left side of the scanner unit assembly.

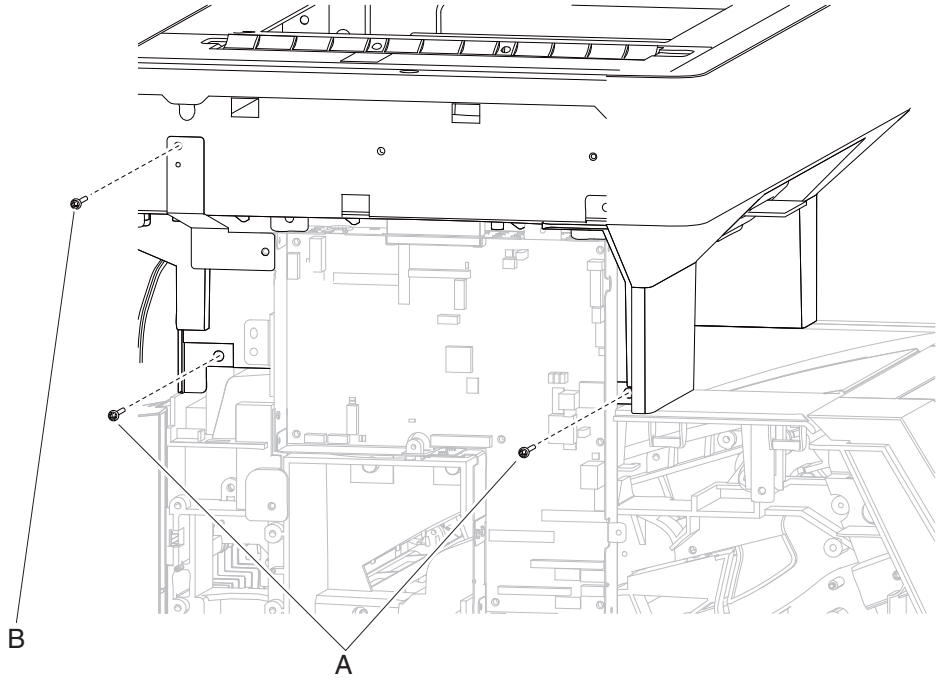

5. Remove the scanner right cover. Go to **"Scanner right cover removal (models X651, X652, X654, and X656)" on page 524**.
6. Remove the two plastic screws (C) securing the right side of the scanner unit assembly to the printer.

7 Remove the screw (D) securing the ground strap to the frame of the scanner unit assembly.

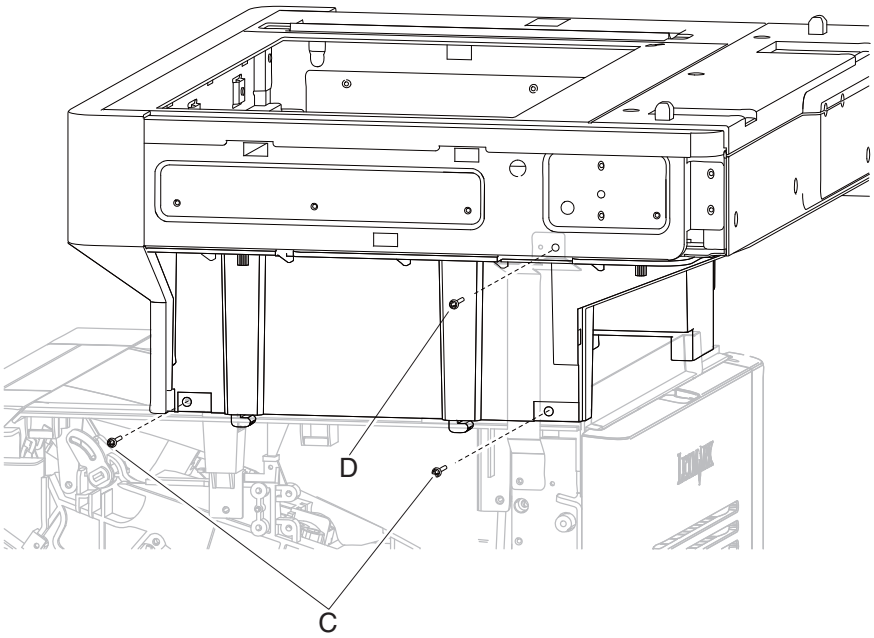

8 Carefully slide the scanner unit assembly to the front, and lift up.

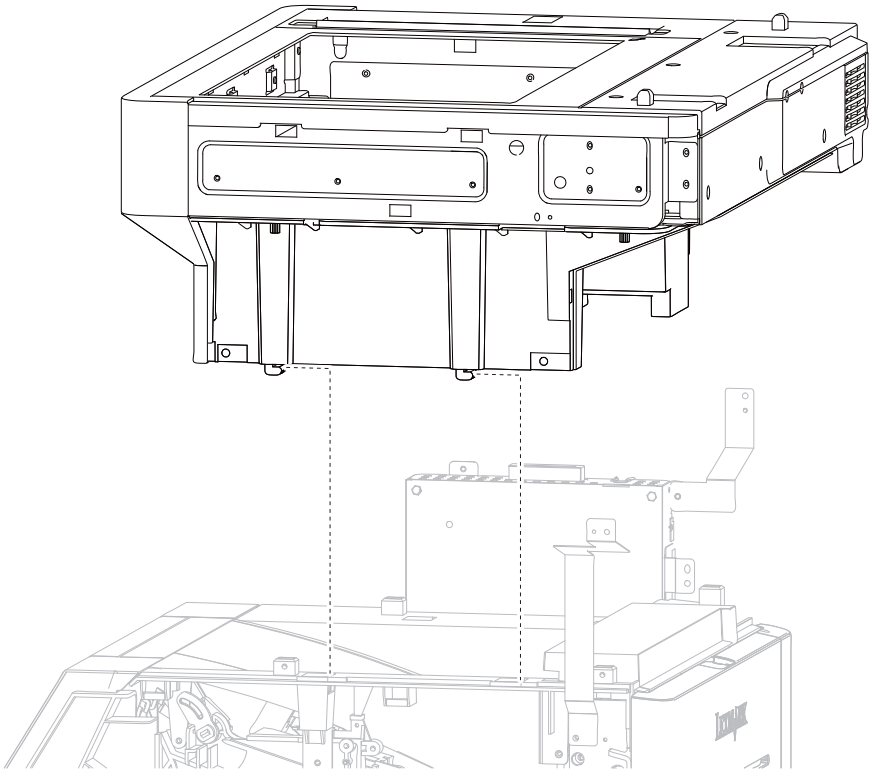

Scanner unit assembly removal (model X658)

Warning—Potential Damage: When replacing the system card assembly and the operator panel assembly, make sure to:

- Replace only one component at a time.
- Perform a POR every after each component is replaced.

If this procedure is not followed, then the printer will be rendered inoperable.

These components can be used as a method of troubleshooting as long as the machine is booted into diagnostic mode or is operating in diagnostic mode. Once a component has been installed in a machine and powered up into user mode, it cannot be used in another machine. It must be returned to the manufacturer.

1. Remove the ADF unit assembly. Go to **"ADF unit assembly removal (model X658)" on page 561**.
2. Remove the left side cover. Go to **"Left side cover removal (model X658)" on page 318**.
3. Remove the scanner controller card cage cover.
4. Disconnect the CCD and ribbon cable harnesses.
5. Remove the three screws (A) from the right side of the scanner support.
6. Remove the three screws (B) from the left side of the scanner support.

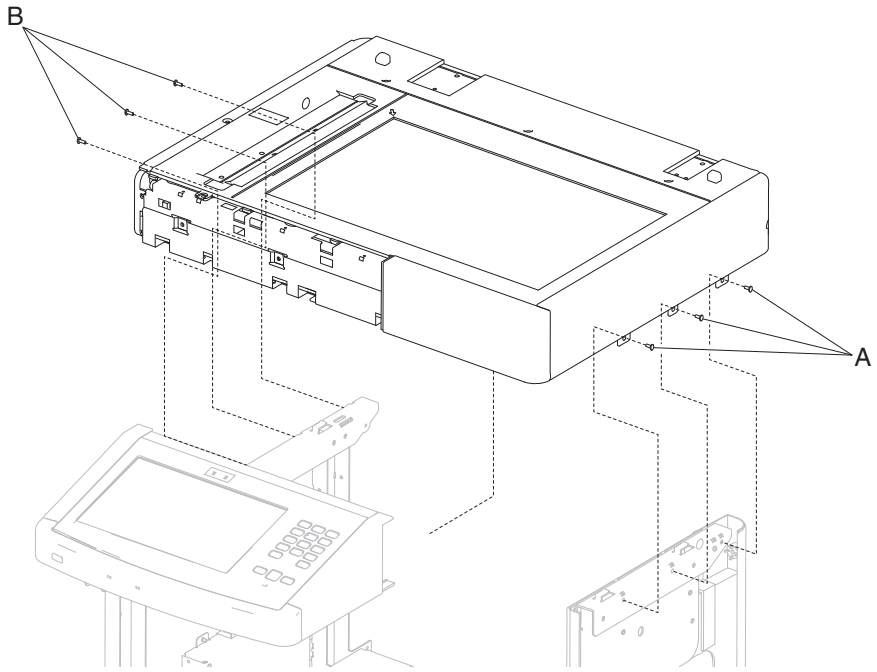

7. Slide the cover strip (C) to the left, and then remove using a prying tool.

8 Remove the three screws (D) securing the operator panel assembly.

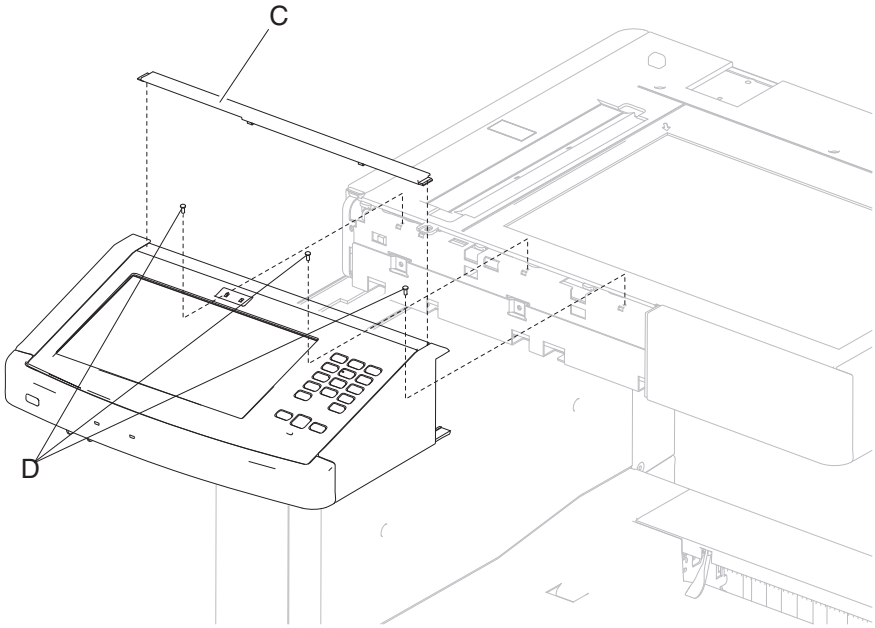

9 Remove the three screws (E) securing the operator panel assembly bottom to the scanner frame.

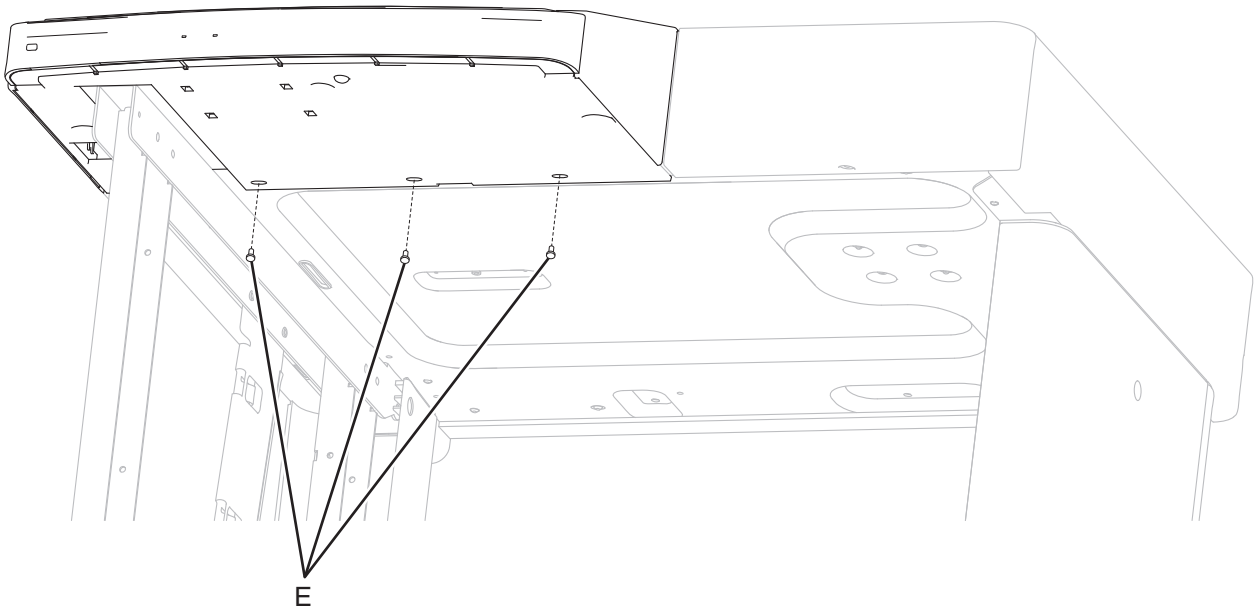

10 Slide the flatbed scanner to the rear, and remove.

ADF removals

ADF feed/pick roll assembly removal

1 Lift the ADF top door assembly.

2 Slide the ADF pick roll assembly to the front.

3 Lift the rear of the ADF pick roll assembly.

4 Remove the ADF pick roll assembly.

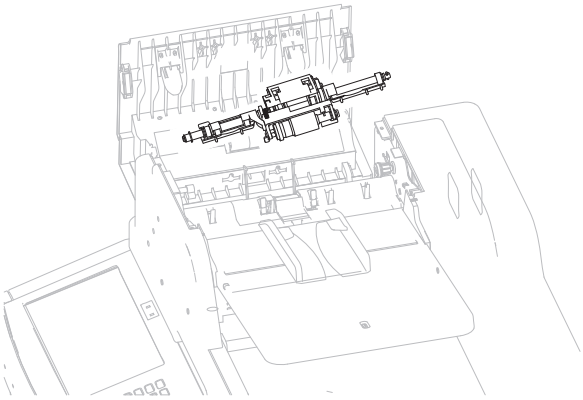

ADF separator roll removal

1 Lift the ADF top door assembly.

2 Remove the ADF feed/pick roll assembly. Go to **"ADF feed/pick roll assembly removal" on page 534**.

3 Remove the access cover.

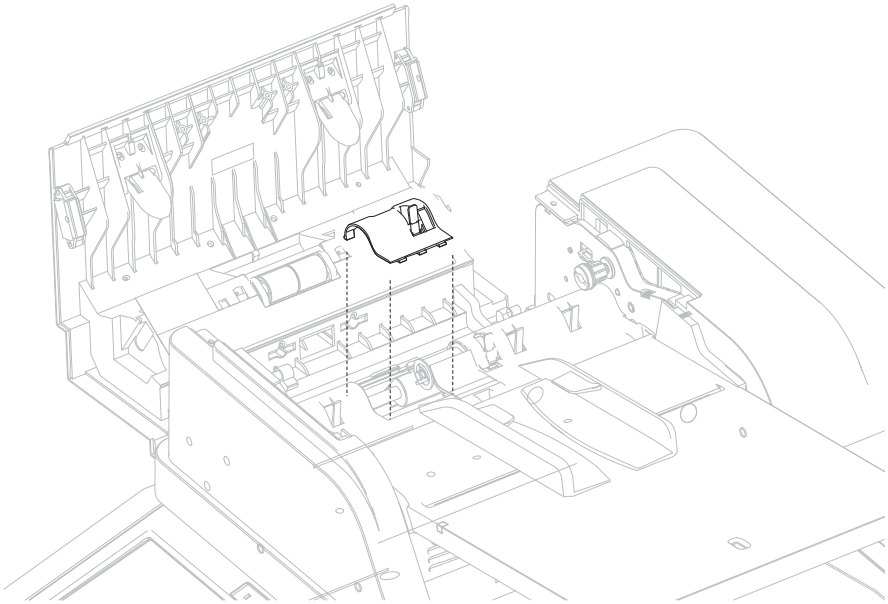

4 Press tab (A), and then slide the separator roll off the shaft.

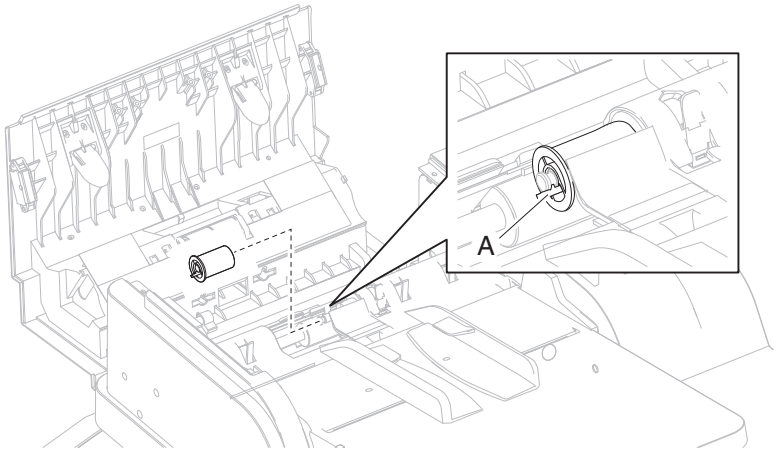

ADF separator torque limiter assembly removal

1 Lift the ADF top door assembly.

2 Remove the ADF feed/pick roll assembly. Go to **"ADF feed/pick roll assembly removal" on page 534**.

3 Remove the access cover.

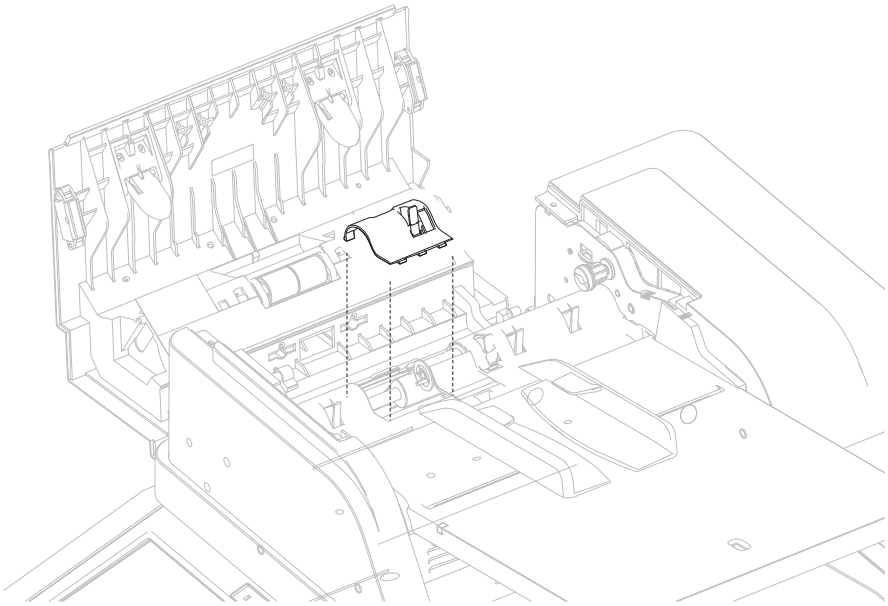

4 Press tab (A), and then slide the separator roll off the shaft.

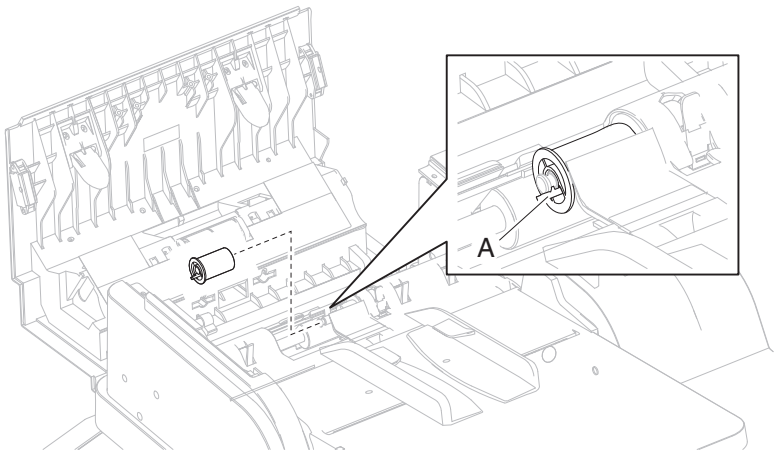

5 Slide the ADF separator torque limiter assembly to the front, and then remove.

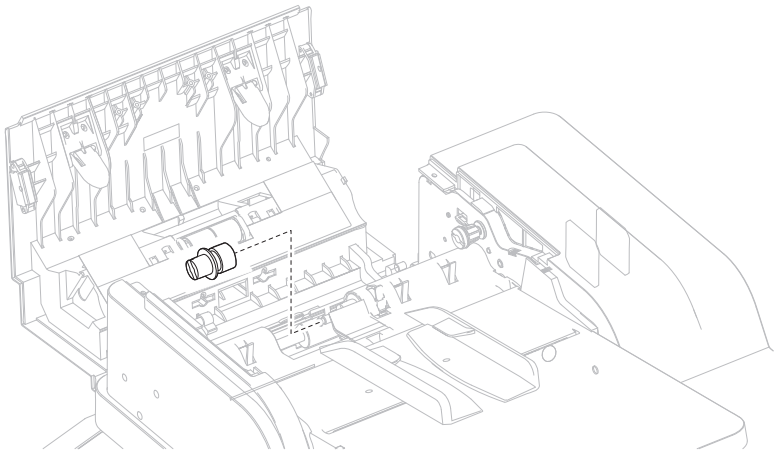

ADF front cover removal

1 Lift the ADF top door assembly.

2 Remove the two screws (A) from the top of the front cover assembly.

3 Remove the one screw (B) from the bottom of the ADF front cover.

4 Release the bottom tabs (C) on the ADF front cover.

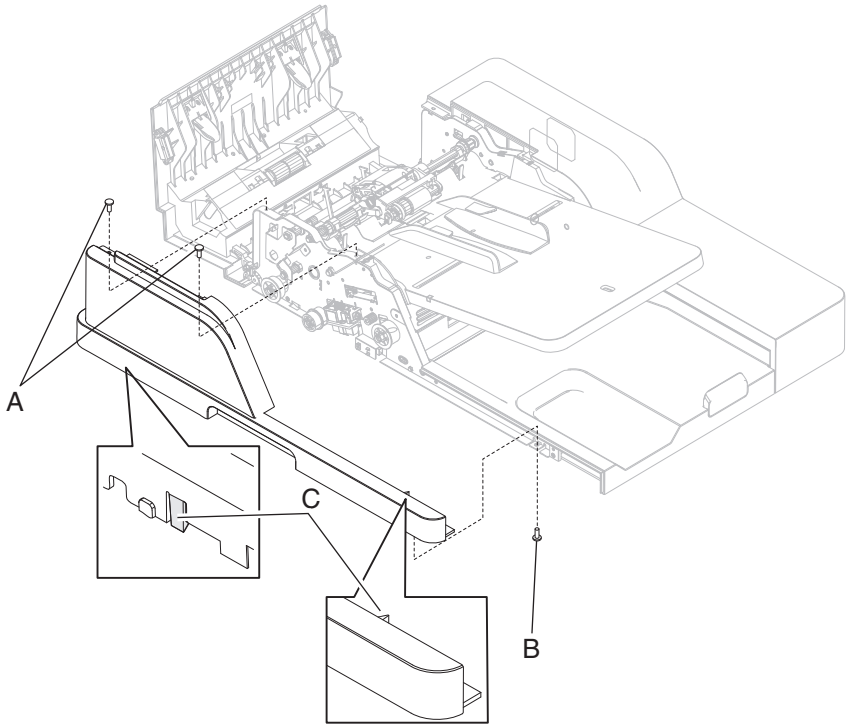

5 Remove the ADF front cover.

ADF rear cover removal

1 Lift the ADF left door cover.

2 Remove the two metal screws (A).

3 Remove the plastic screw (B) from the right side of the ADF rear cover.

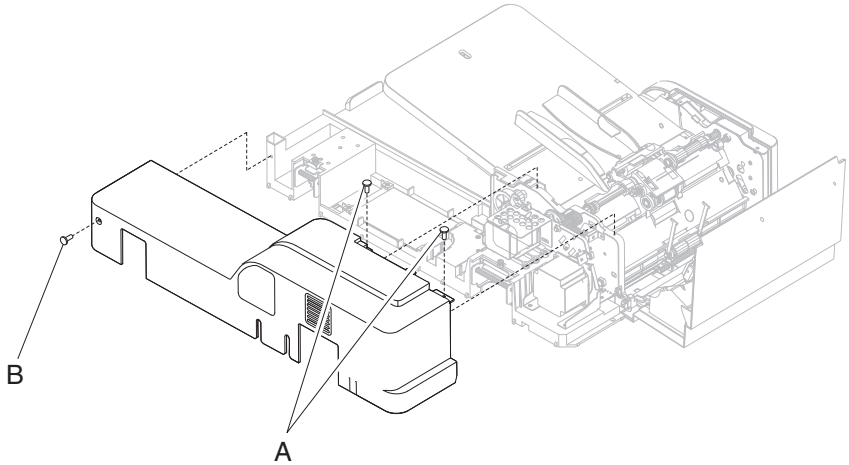

4 Remove the ADF rear cover.

ADF document tray assembly removal

1 Remove the ADF front cover. Go to **"ADF front cover removal" on page 537**.

2 Remove the ADF rear cover. Go to **"ADF rear cover removal" on page 538**.

3 Remove the two metal screws (A) from the top of the ADF document tray assembly.

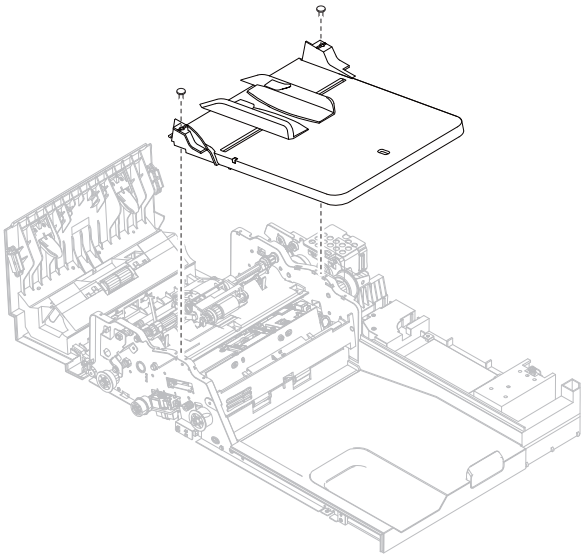

4 Slide the ADF document tray assembly to the right.

5 Disconnect the ADF paper length/width sensors cable.

6 Remove the ADF document tray assembly.

Installation note: When reinstalling the ADF document tray assembly, make sure to adjust the skew. Go to **"Adjusting skew" on page 291**.

ADF top door assembly removal

1 Remove the ADF front cover. Go to **"ADF front cover removal" on page 537**.

2 Remove the ADF rear cover. Go to **"ADF rear cover removal" on page 538**.

3 Lift the ADF top door assembly.

4 Push down on the spring clips (A) on the left and right sides.

5 Remove the ADF left door links (B).

6 Unscrew the two hinge pins (C) on the left and right sides.

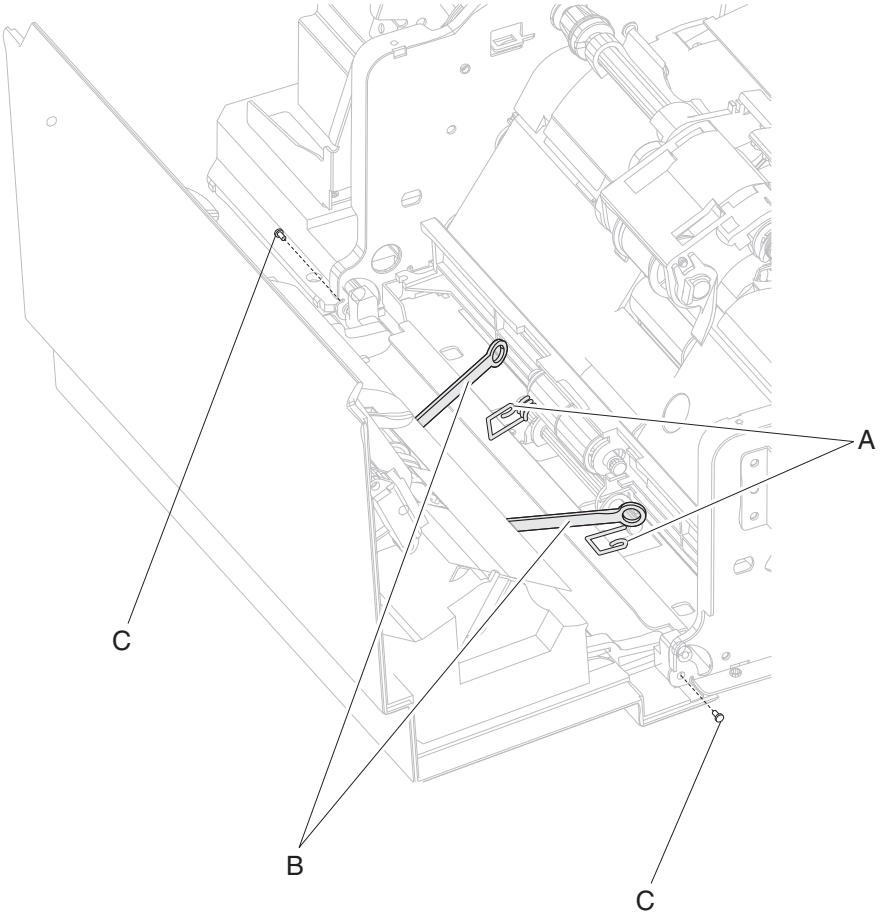

7 Pry out the front tabs (D).

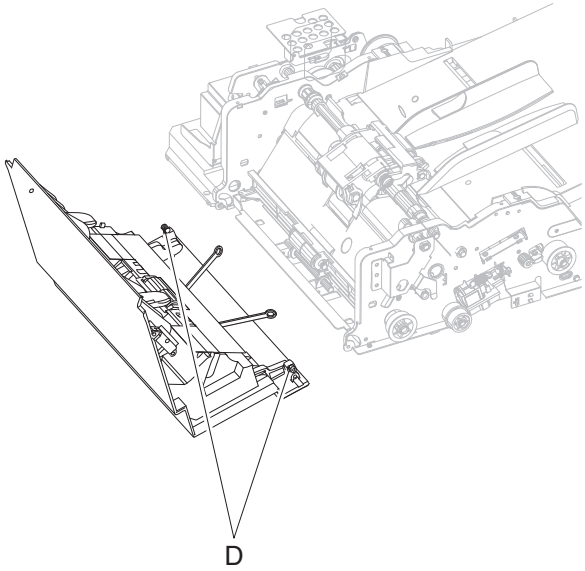

8 Remove the ADF top door assembly.

ADF controller card removal

1 Remove the ADF rear cover. Go to **“ADF rear cover removal” on page 538**.

2 Disconnect all cables attached to the controller card.

3 Remove the four screws (A) securing the ADF controller card.

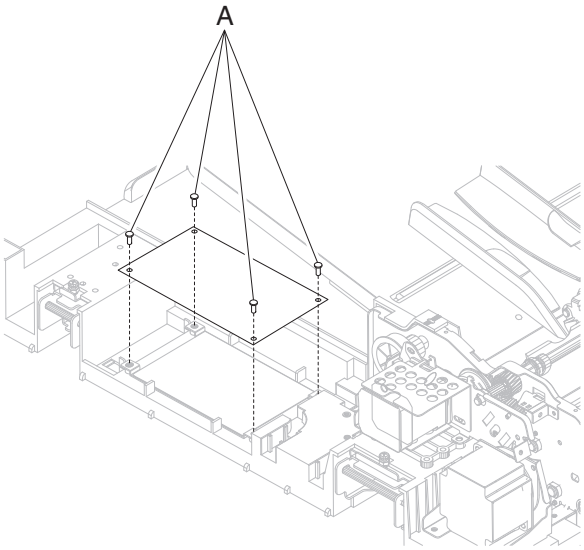

4 Remove the ADF controller card.

ADF platen cushion removal

1 Lift the ADF unit assembly.

2 Unfasten the velcro.

3 Remove the ADF platen cushion.

ADF lower door assembly removal

1 Remove the ADF platen cushion. Go to **“ADF platen cushion removal” on page 541**.

2 Open the ADF bottom door by pressing the green tab (A) on the underside of the front of the ADF unit assembly.

3 Remove the screw (B) securing the ground wire to the ADF unit assembly.

4 Remove the two screws (C) securing the bottom door hinge plate.

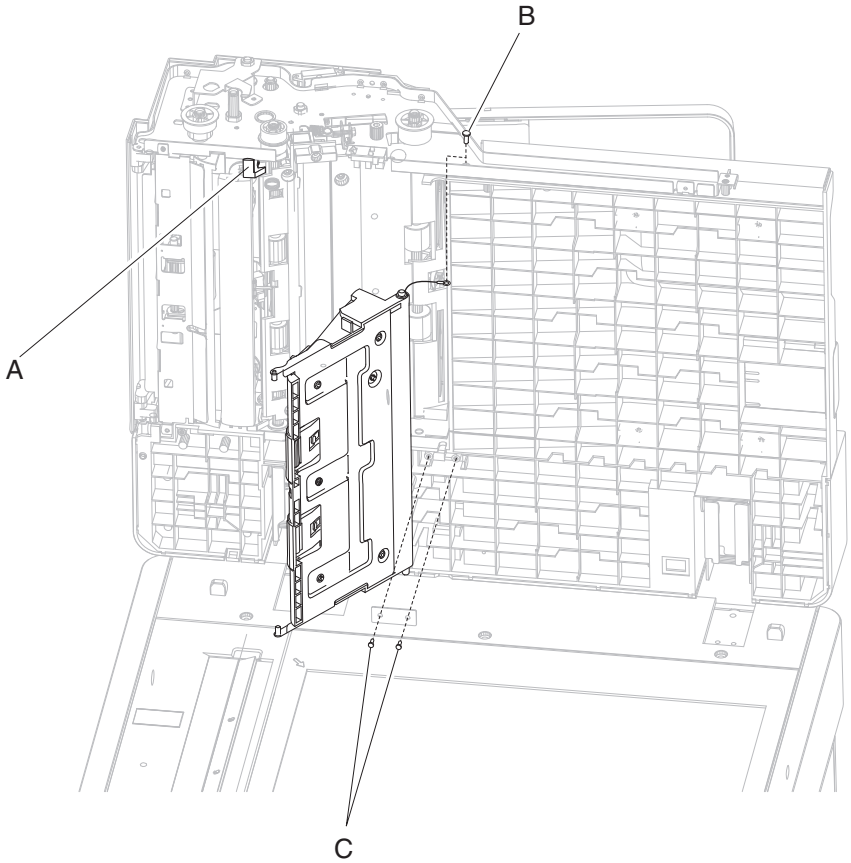

5 Remove the hinge plate and pull the ADF lower door assembly, and then remove.

ADF duplex CCD scan glass assembly removal (models X654, X656, and X658)

1 Remove the ADF platen cushion. Go to **"ADF platen cushion removal" on page 541**.

2 Open the ADF lower door assembly.

3 Remove the four screws (A) from the ADF duplex CCD scan glass assembly.

4 Pull up and release the two snaps (B) securing the ADF duplex CCD scan glass assembly.

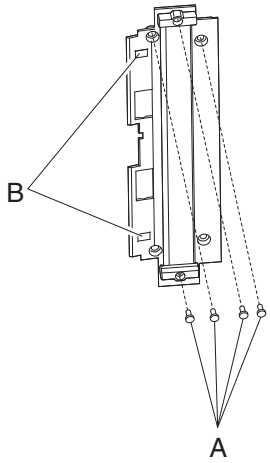

5 Remove the ADF duplex CCD scan glass assembly.

ADF duplex CCD assembly removal (models X654, X656, and X658)

CAUTION—POTENTIAL INJURY: When you see this symbol, there is a danger from hazardous voltage in the area of the product where you are working. Unplug the product before you begin, or use caution if the product must receive power in order to perform the task.

1 Remove the ADF duplex CCD scan glass assembly. Go to **"ADF duplex CCD scan glass assembly removal (models X654, X656, and X658)" on page 542**.

2 Disconnect the CCD harness from the top of the ADF unit assembly.

3 Remove the skew adjustment locking screw (A), the skew adjustment screw (B), and the spring.

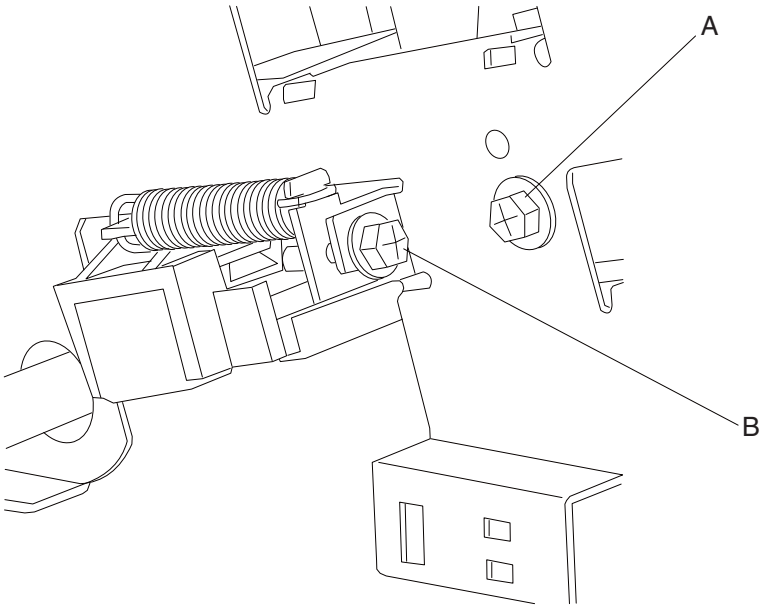

4 Remove the two screws (C) securing the paper guide and remove.

5 Remove the three screws (D) from the underside of the ADF unit assembly securing the ADF duplex CCD assembly to the ADF.

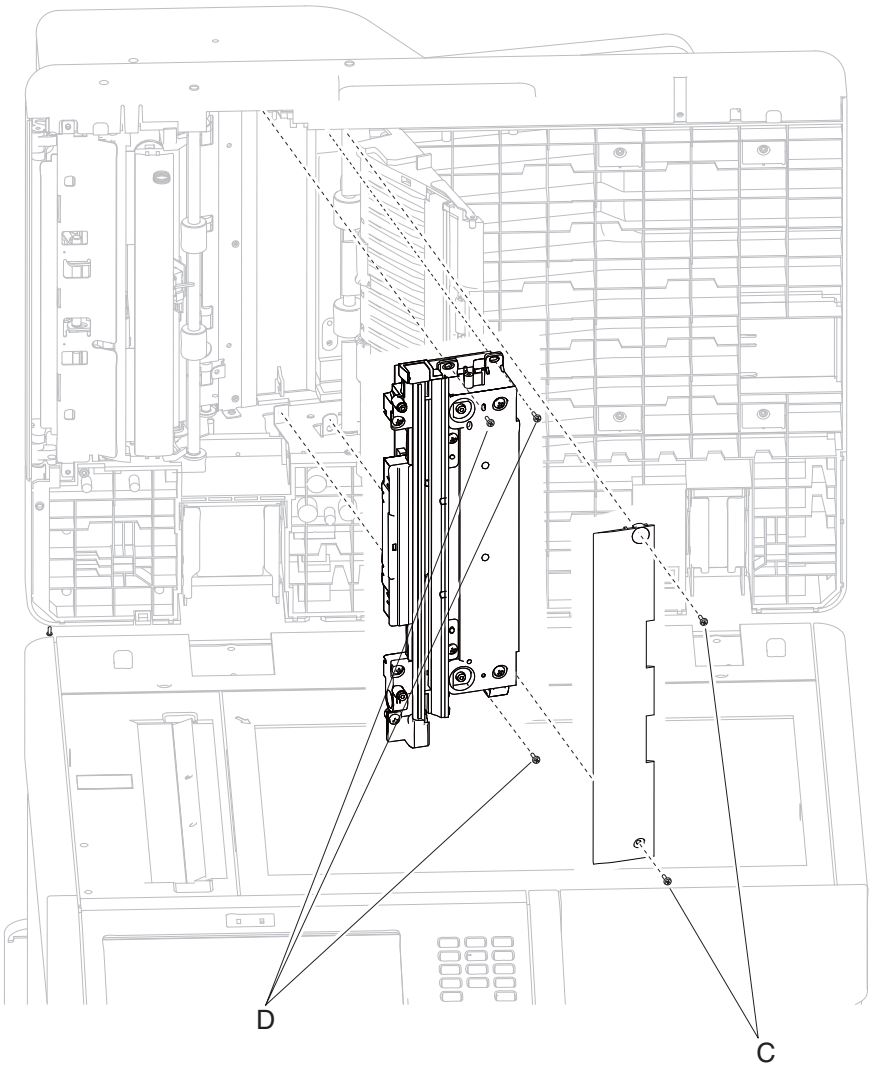

6 Carefully remove the ADF duplex CCD assembly from the underside of the ADF unit assembly.

Installation note: When reinstalling the ADF duplex CCD assembly, make sure to adjust the skew. Go to **"Adjusting skew" on page 291**.

ADF pinch roll assembly removal

1 Remove the ADF top door assembly. Go to **"ADF top door assembly removal" on page 539**.

2 Remove the two screws (A) on either side of the ADF pinch roll assembly.

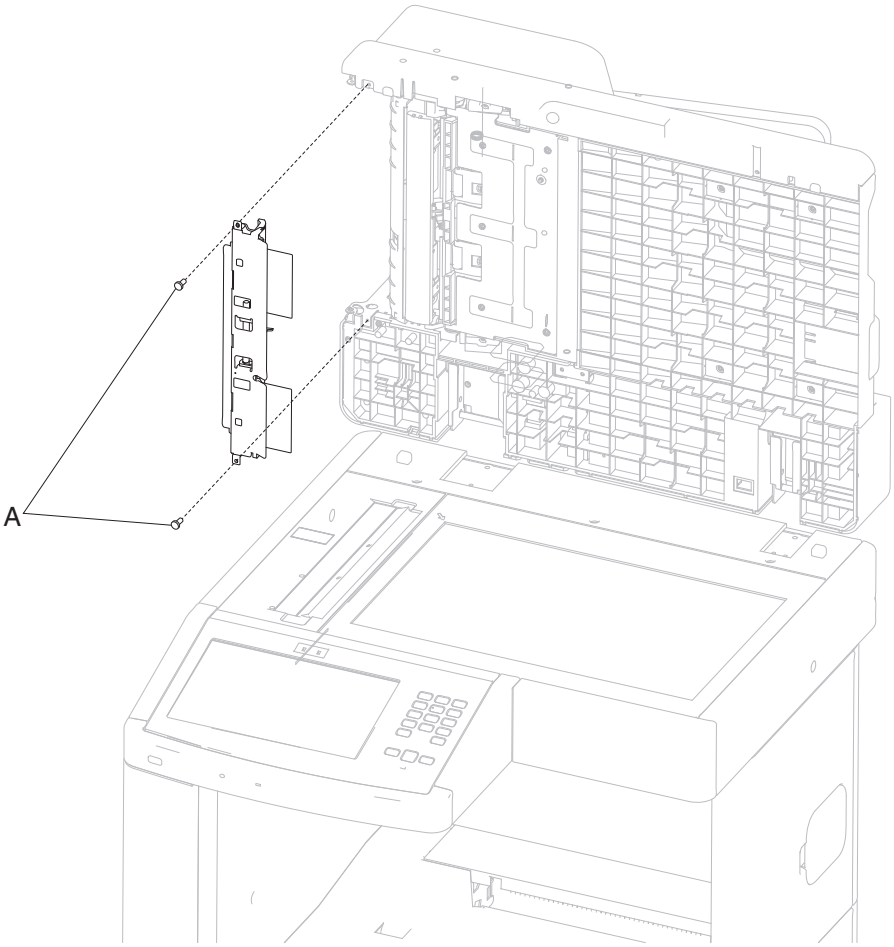

3 Remove the ADF pinch roll assembly.

ADF turn guide removal

1 Remove the ADF pinch roll assembly. Go to **"ADF pinch roll assembly removal" on page 545**.

2 Remove the ADF separator torque limiter assembly. Go to **"ADF separator torque limiter assembly removal" on page 536**.

3 Remove the two screws (A) from the front side. Be sure to secure the ground strap by the upper turn guide screw when reinstalling.

4 Using a flat-blade screwdriver, unfasten the hook securing the separator guide to the turn guide.

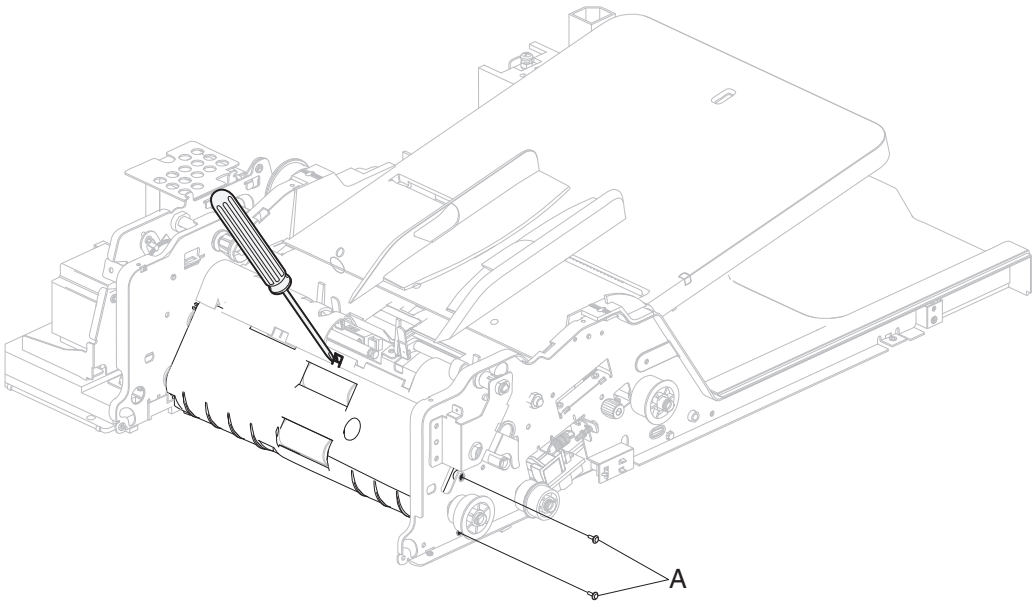

Note: Upon reassembly, reattach the hook by pressing with your fingers until it snaps into place.

5 Pivot the turn guide out from the front side, giving room to dislodge the locating pins (B) from the rear.

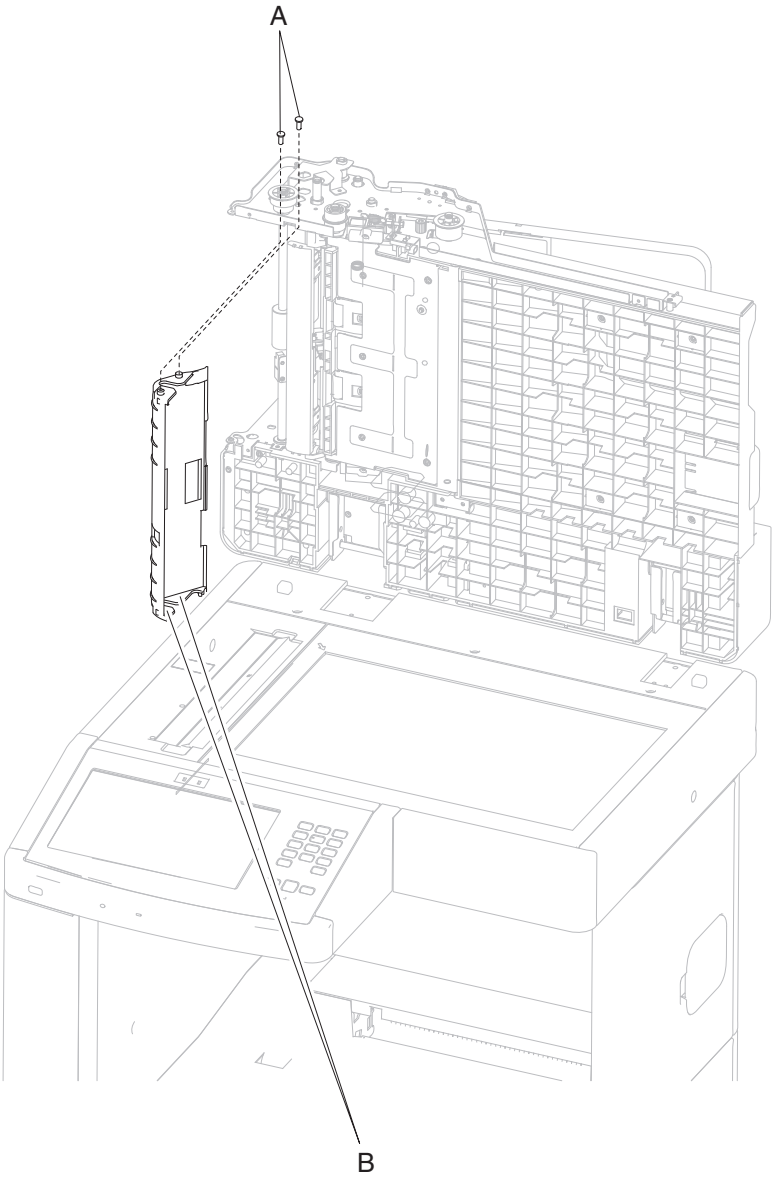

6 Remove the ADF turn guide.

ADF media pinch pad assembly removal

1 Remove the ADF duplex CCD assembly. Go to **"ADF duplex CCD assembly removal (models X654, X656, and X658)" on page 543**.

2 Remove the ADF pinch roll assembly. Go to **"ADF pinch roll assembly removal" on page 545**.

3 Remove the ADF turn guide. Go to **"ADF turn guide removal" on page 545**.

4 Remove the four screws (A) securing the ADF media pinch pad assembly.

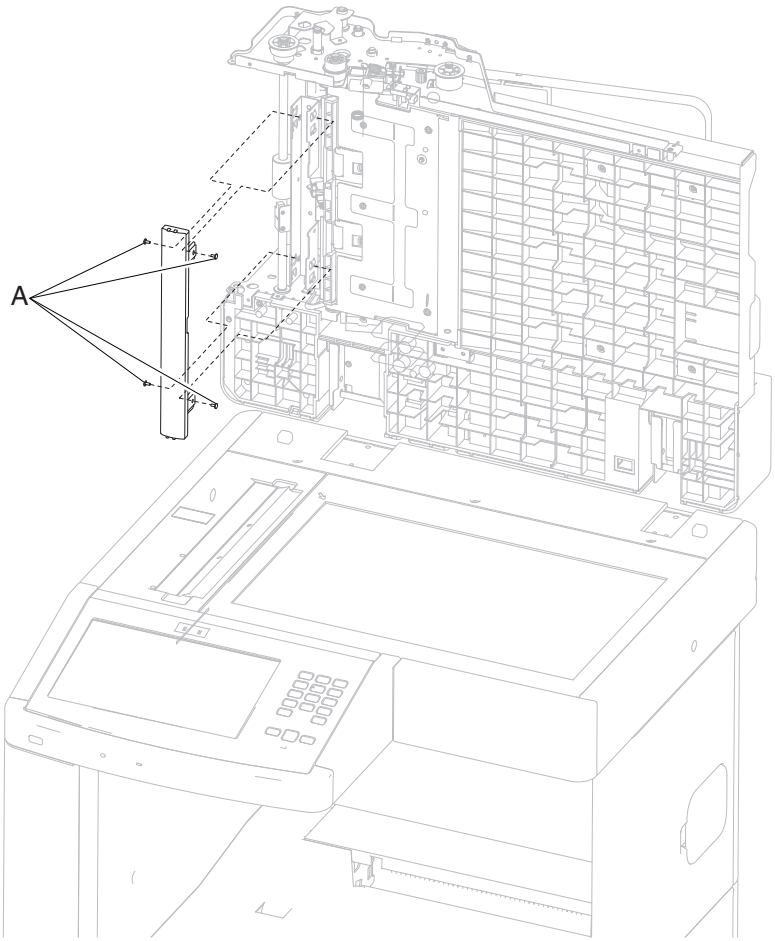

5 Remove the ADF media pinch pad assembly.

Sensor (ADF media exit) fan bracket assembly removal (models X654, X656, and X658)

1 Remove the ADF front cover. Go to **"ADF front cover removal" on page 537**.

2 Remove the ADF rear cover. Go to **"ADF rear cover removal" on page 538**.

3 Open the ADF top door assembly.

4 Disconnect the ground strap, the fan (CN12) harness, and the media exit sensor (CN9) harness.

5 Remove the two screws (A) on the front and rear of the sensor (ADF media exit) fan bracket assembly.

6 Remove the screw (B) from the ground strap.

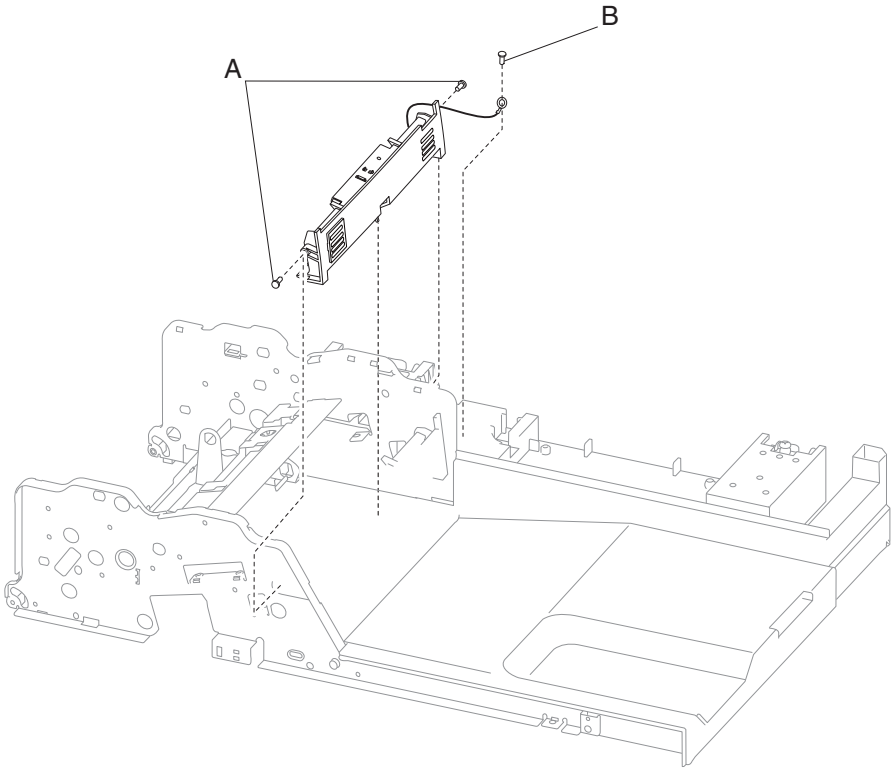

7 Remove the sensor (ADF media exit) fan bracket assembly.

Sensor (ADF media exit) bracket assembly removal (model X651)

1 Remove the ADF front cover. Go to **"ADF front cover removal" on page 537**.

2 Remove the ADF rear cover. Go to **"ADF rear cover removal" on page 538**.

3 Open the ADF top door assembly.

4 Disconnect the ground strap, the fan (CN12) harness, and the media exit sensor (CN9) harness.

5 Remove the two screws (A) on the front and rear of the sensor (ADF media exit) fan bracket assembly.

6 Remove the screw (B) from the ground strap.

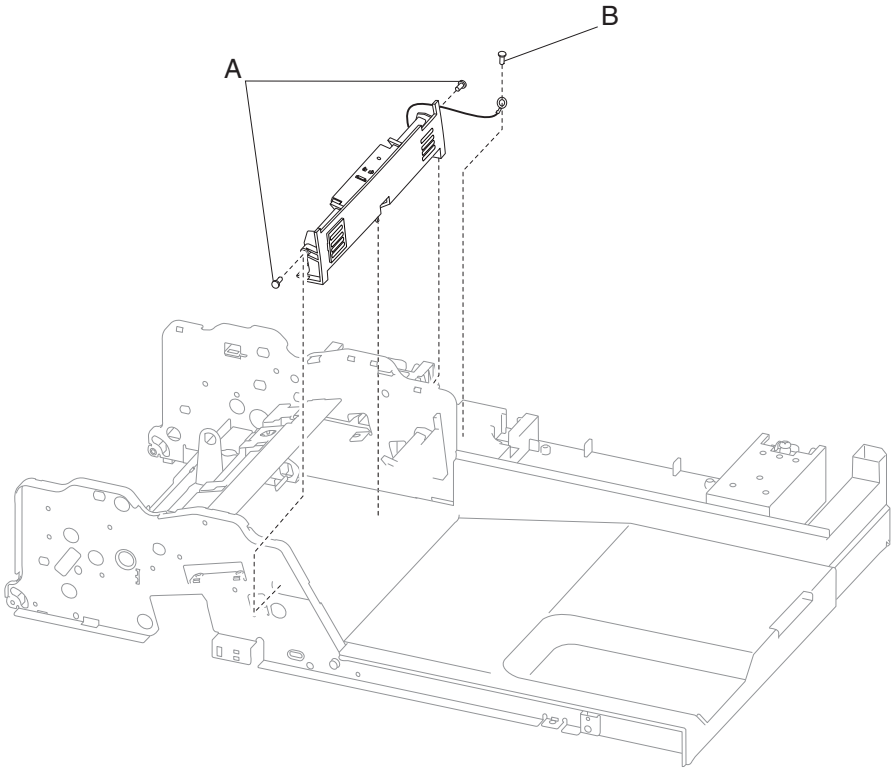

7 Remove the sensor (ADF media exit) fan bracket assembly.

ADF transport drive motor bracket assembly with cable removal

1 Remove the ADF rear cover. Go to **"ADF rear cover removal" on page 538**.

2 Remove the ADF transport drive motor bracket tension spring (A).

3 Remove the wires from the retaining clip (B) on top of the bracket.

4 Disconnect the ADF transport drive motor harness.

5 Remove the two screws (C) securing the ADF transport drive motor bracket assembly with cable to the ADF feed motor bracket.

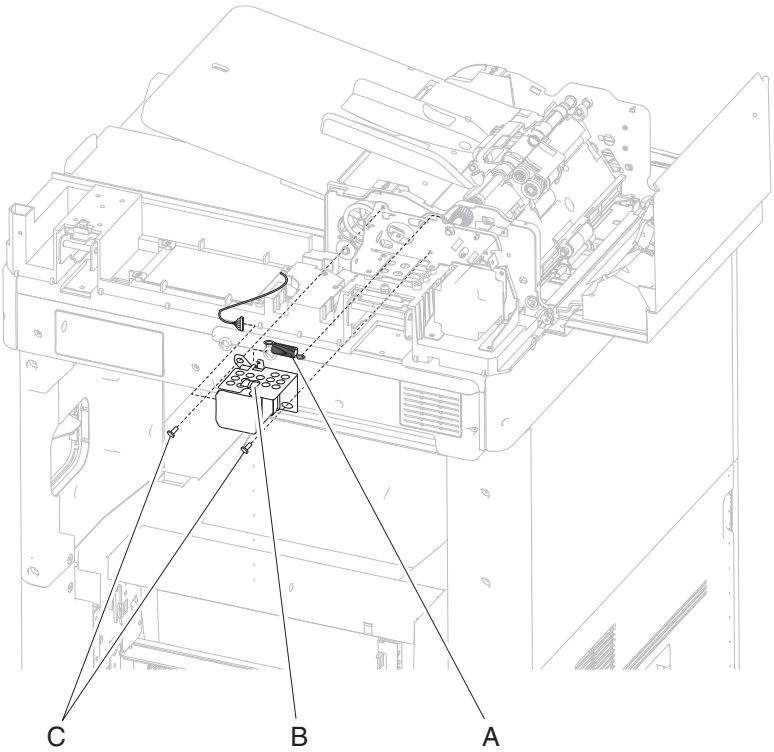

6 Slide the ADF transport drive motor bracket to the right, loosening the transport belt.

7 Remove the ADF transport drive motor bracket assembly with cable.

ADF feed drive motor assembly removal

1 Remove the ADF transport drive motor bracket assembly with cable. Go to **"ADF transport drive motor bracket assembly with cable removal" on page 550**.

2 Unfasten and remove all wires from the ADF feed drive motor assembly.

3 Disconnect the ADF feed motor harness from the feed motor.

4 Remove the E-clip (A) securing one end of the ADF feed/pick roll feed shaft to the ADF feed drive motor assembly.

5 Remove the bushing from the pick roll feed shaft.

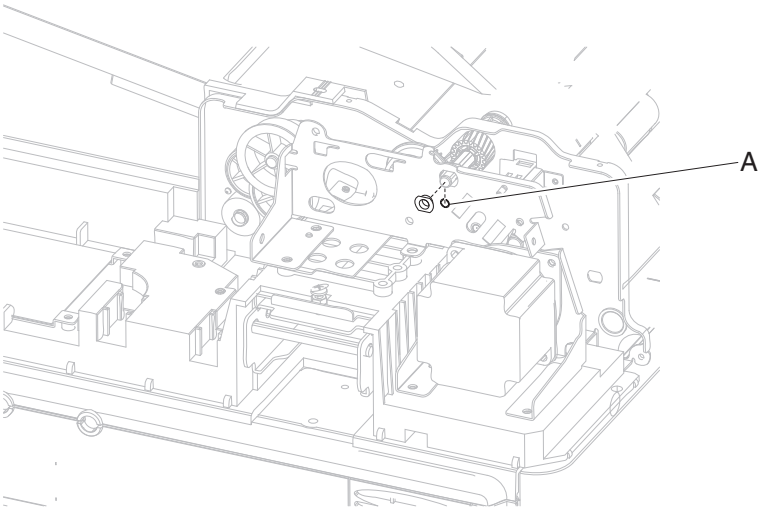

6 Remove the six screws (B) securing the ADF feed drive motor assembly to the ADF unit assembly.

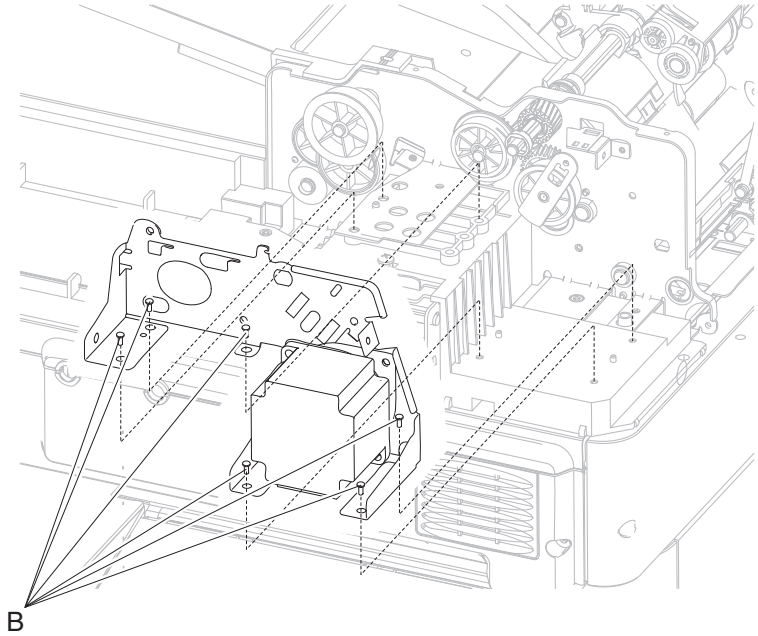

7 Remove the ADF feed drive motor assembly to include the two belts and cable.

ADF pick roll position cam assembly removal

1 Remove the ADF front cover. Go to **"ADF front cover removal" on page 537**.

2 Remove the ADF feed/pick roll assembly. Go to **"ADF feed/pick roll assembly removal" on page 534**.

3 Disengage the clip (A) on the shaft arm (B), securing it to the shaft.

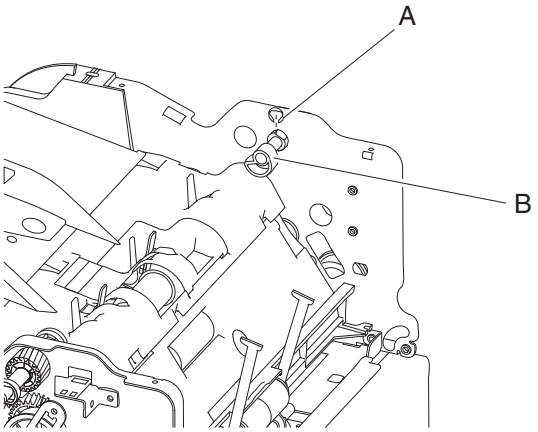

4 Remove the two springs attached to the shaft arm (B).

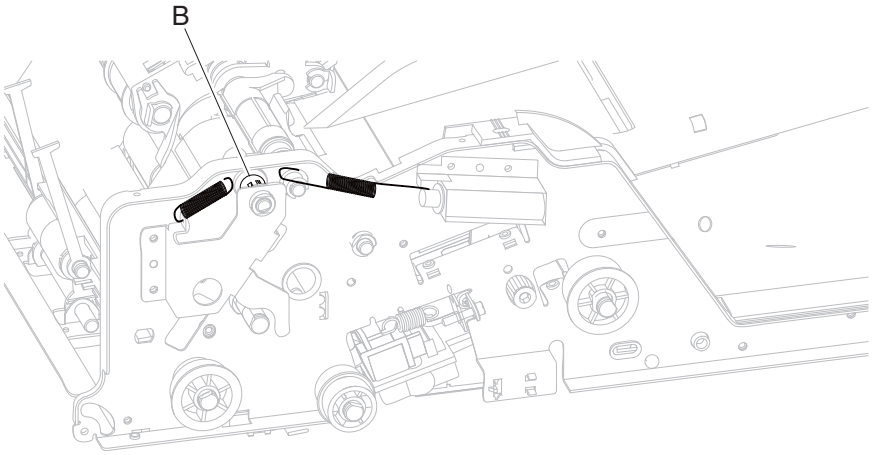

5 Remove the three screws (C) securing the ADF pick roll position cam assembly bracket.

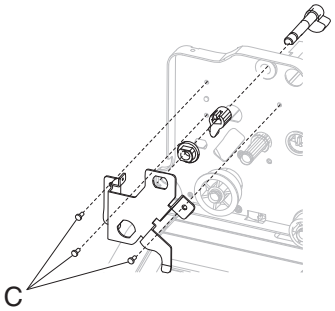

6 Remove the ADF pick roll position cam assembly bracket.

7 Remove it from the shaft.

8 Slide the shaft and the ADF pick roll position cam assembly out of the ADF frame.

ADF solenoid assembly removal

1 Remove the ADF front cover. Go to **"ADF front cover removal" on page 537**.

2 Remove the ADF pick roll position cam assembly spring from the cam shaft lever.

3 Disconnect the solenoid wire harness.

4 Remove the two screws securing the solenoid bracket assembly to the frame of the ADF unit assembly.

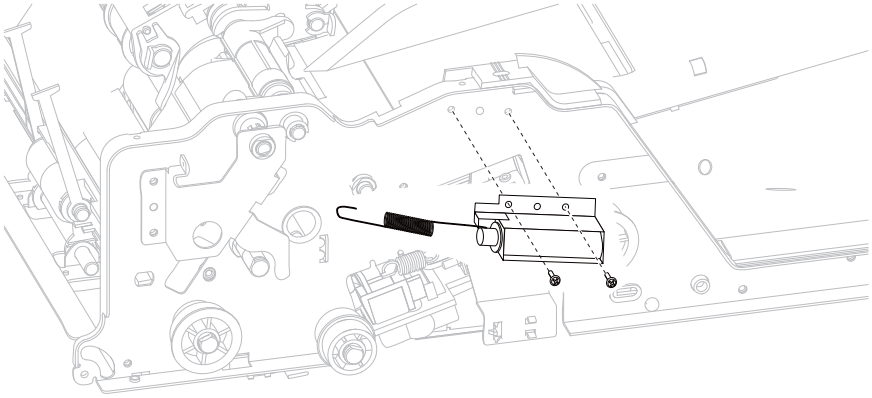

5 Remove the ADF solenoid assembly.

Sensor (ADF top door interlock) removal

1 Remove the ADF rear cover assembly. Go to **"ADF rear cover removal" on page 538**.

2 Remove the feed motor bracket assembly. Go to **"ADF feed drive motor assembly removal" on page 551**.

3 Disconnect the sensor harness from the sensor.

4 Remove the sensor (ADF top door interlock) bracket screw (A).

5 Remove the bracket with the sensor (ADF top door interlock).

6 Detach the sensor (ADF top door interlock) from the bracket by squeezing the clip (B)and removing the sensor.

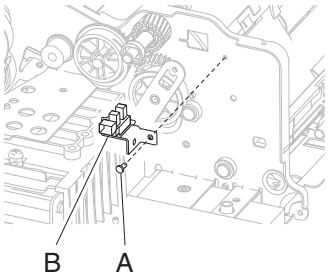

Sensor (ADF lower door interlock) removal

1 Remove the ADF front cover. Go to **"ADF front cover removal" on page 537**.

2 Remove the ADF platen cushion. Go to **"ADF platen cushion removal" on page 541**.

3 Open the bottom door assembly.

4 Remove the sensor by squeezing the tabs (A) and removing it from the front of the ADF frame.

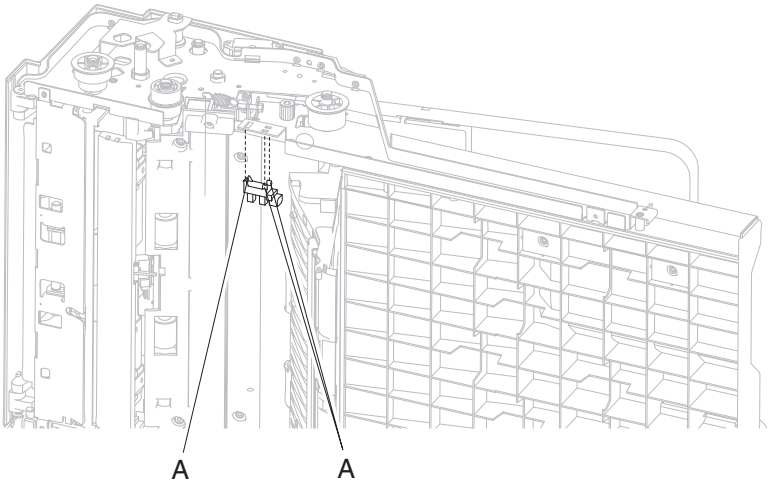

5 Disconnect the lower sensor (ADF lower door interlock) harness.

6 Remove the sensor (ADF lower door interlock).

Sensor (ADF 2nd scan) removal

1 Remove the ADF media pinch pad assembly. Go to **"ADF media pinch pad assembly removal" on page 547**.

2 Remove the sensor (ADF 2nd scan) harness from the sensor.

3 Remove the sensor from the pinch pad mounting bracket assembly by squeezing the tabs (A) on the sensor.

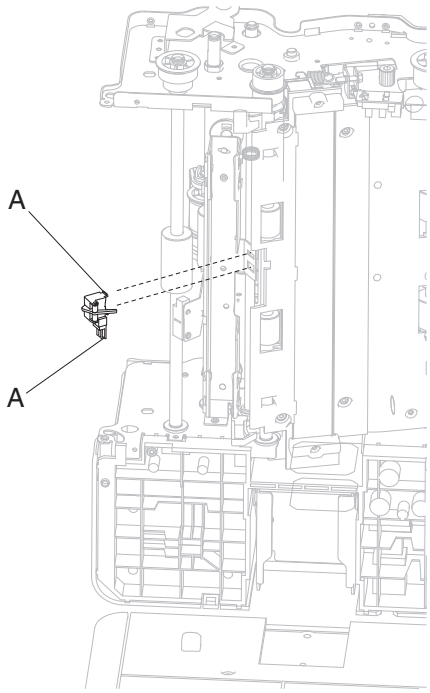

4 Remove the sensor (ADF 2nd scan).

Sensor (ADF 1st scan) removal

1 Remove the ADF turn guide. Go to **"ADF turn guide removal" on page 545**.

2 Remove the screw (A) securing the sensor (ADF 1st scan) to its bracket.

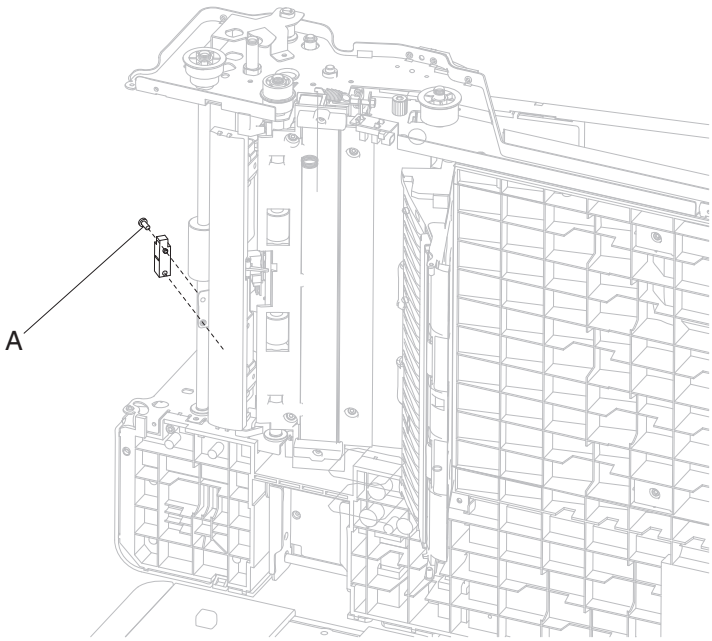

3 Remove the sensor (ADF 1st scan).

4 Remove the sensor (ADF 1st scan) harness.

Sensor (ADF sheet through) removal

1 Remove the ADF turn guide. Go to **“ADF turn guide removal” on page 545**.

2 Remove the screw (A) securing the sensor (ADF sheet through) to its bracket.

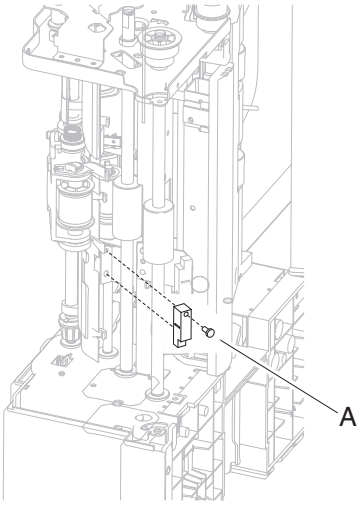

3 Remove the sensor (ADF sheet through).

4 Remove the sensor (ADF sheet through) harness.

Sensor (ADF document set) removal

1 Remove the ADF document tray assembly. Go to **"ADF document tray assembly removal" on page 539**.

2 Remove the three screws (A) securing the separator guide to the ADF frame.

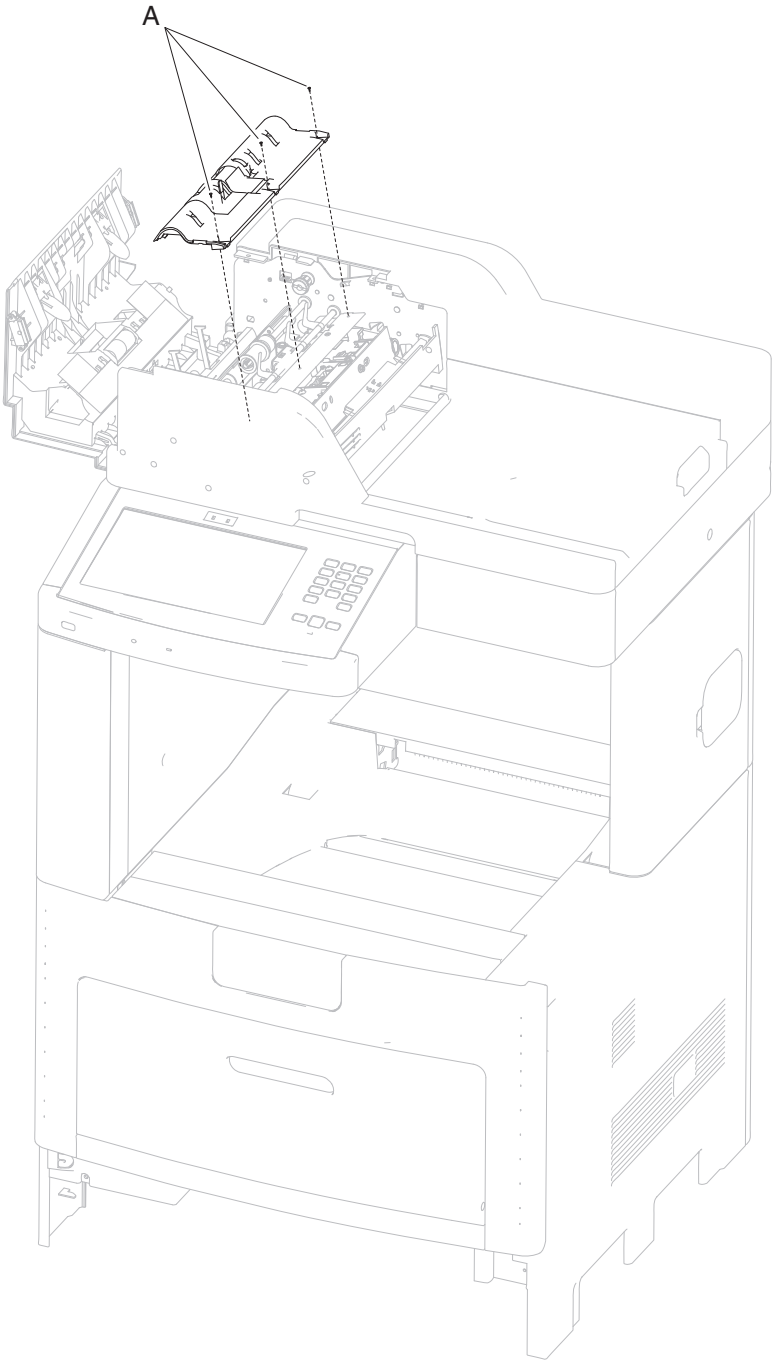

3 Remove the sensor (ADF document set) harness.

4 Remove the two screws (B) securing the sensor (ADF document set) bracket to the ADF frame.

5 Remove the sensor (ADF document set) and bracket.

6 Remove the screw (C) securing the sensor (ADF document set) to the bracket.

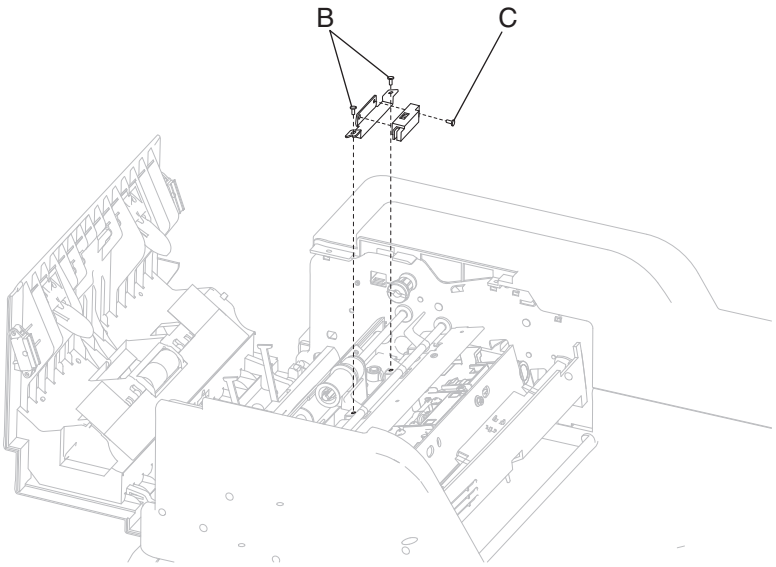

Switch (ADF closed interlock) removal

1 Remove the ADF rear cover assembly. Go to **"ADF rear cover removal" on page 538**.

2 Open the ADF unit assembly.

3 Remove the ADF closed interlock harness from the switch.

4 Using a prying tool, press the tabs (A) on either side of the switch, and pull it down through the bottom of the ADF unit assembly.

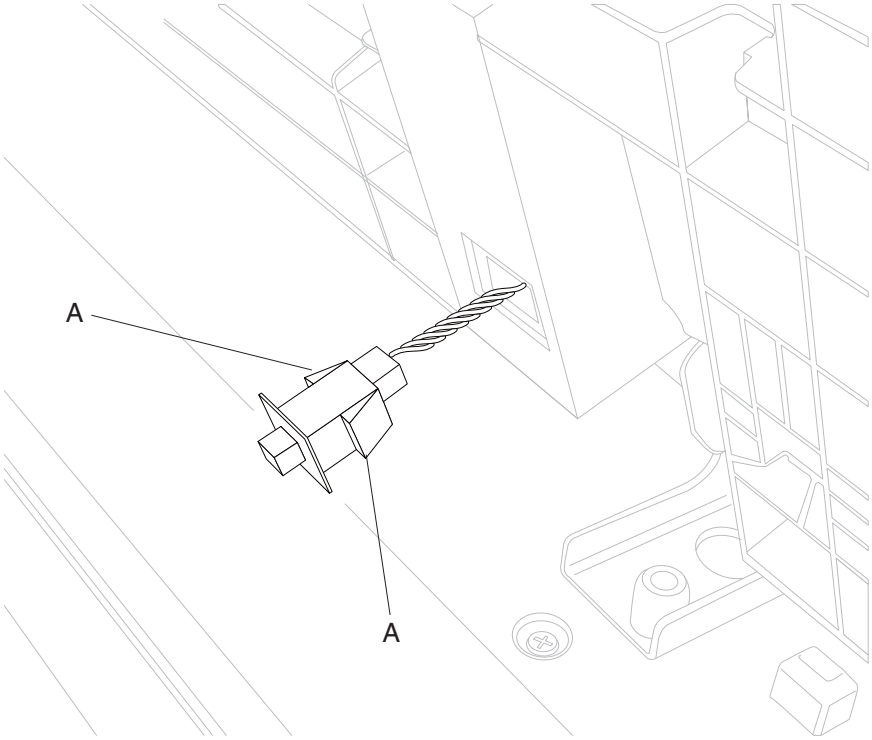

ADF unit assembly removal (models X651, X652, X654, and X656)

Notes:

- Use part number 40X2738 for the X651 and X652 models.
- Use part number 40X6395 for the X654 and X656 models.

1 Remove the scanner rear cover. Go to **"Scanner rear cover removal" on page 522**.

2 Remove the scanner left cover. Go to **"Scanner left cover removal (models X651, X652, X654, and X656)" on page 522**.

Note: Models X651 and X652 do not need the scanner left cover removed (no duplex ADF cable).

3 Slide the left scanner cover to the rear, and remove.

4 Disconnect the CCD harness and ground strap from behind the left side scanner cover.

5 Disconnect the CCD harness and ground strap from behind the rear scanner cover.

6 Open the ADF.

7 Remove the two thumb screws (A) on either side of the ADF unit.

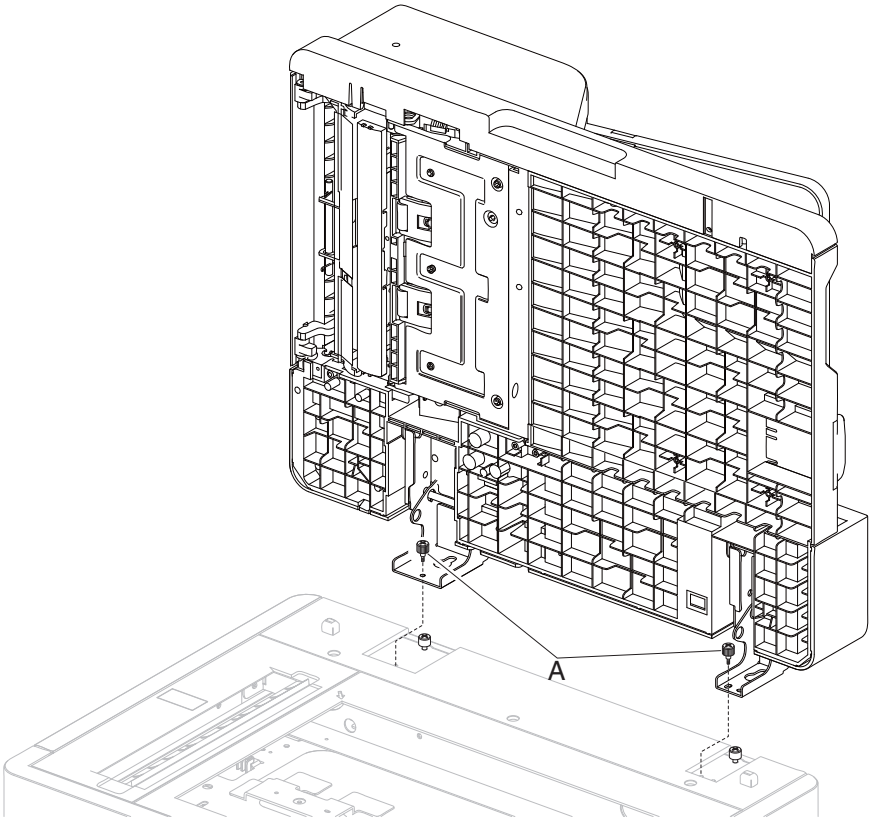

8 Slide the ADF unit to the rear, lift up, and remove the ADF unit assembly.

Installation note: When reinstalling the ADF unit assembly, make sure to adjust the skew. Go to **"Adjusting skew" on page 291**.

ADF unit assembly removal (model X658)

1 Remove the scanner rear cover. Go to **"Scanner rear cover removal" on page 522**.

2 Remove the scanner left support cover. Go to **"Scanner support left cover removal (model X658)" on page 514**.

3 Disconnect the CCD harness and ground strap from behind the scanner left support cover.

4 Disconnect the CCD harness and ground strap from behind the scanner rear cover.

5 Open the ADF.

6 Remove the two thumb screws (A) on both sides of the ADF unit.

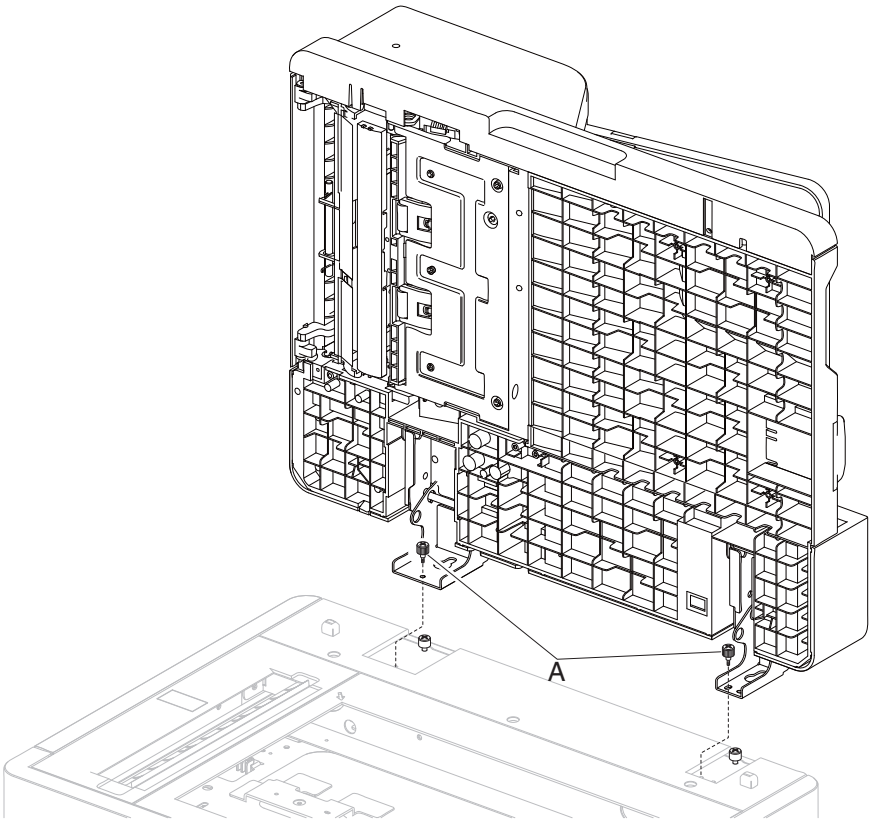

7 Slide the ADF unit to the rear, lift up, and remove the ADF unit assembly.

Installation note: When reinstalling the ADF unit assembly, make sure to adjust the skew. Go to **"Adjusting skew" on page 291**.

ADF left hinge removal

1 Remove the ADF unit assembly. Go to **"ADF unit assembly removal (models X651, X652, X654, and X656)" on page 560** or **"ADF unit assembly removal (model X658)" on page 561**..

2 Remove the ADF feed motor bracket assembly with cable. Go to **"ADF feed drive motor assembly removal" on page 551**.

3 Remove the screw (A).

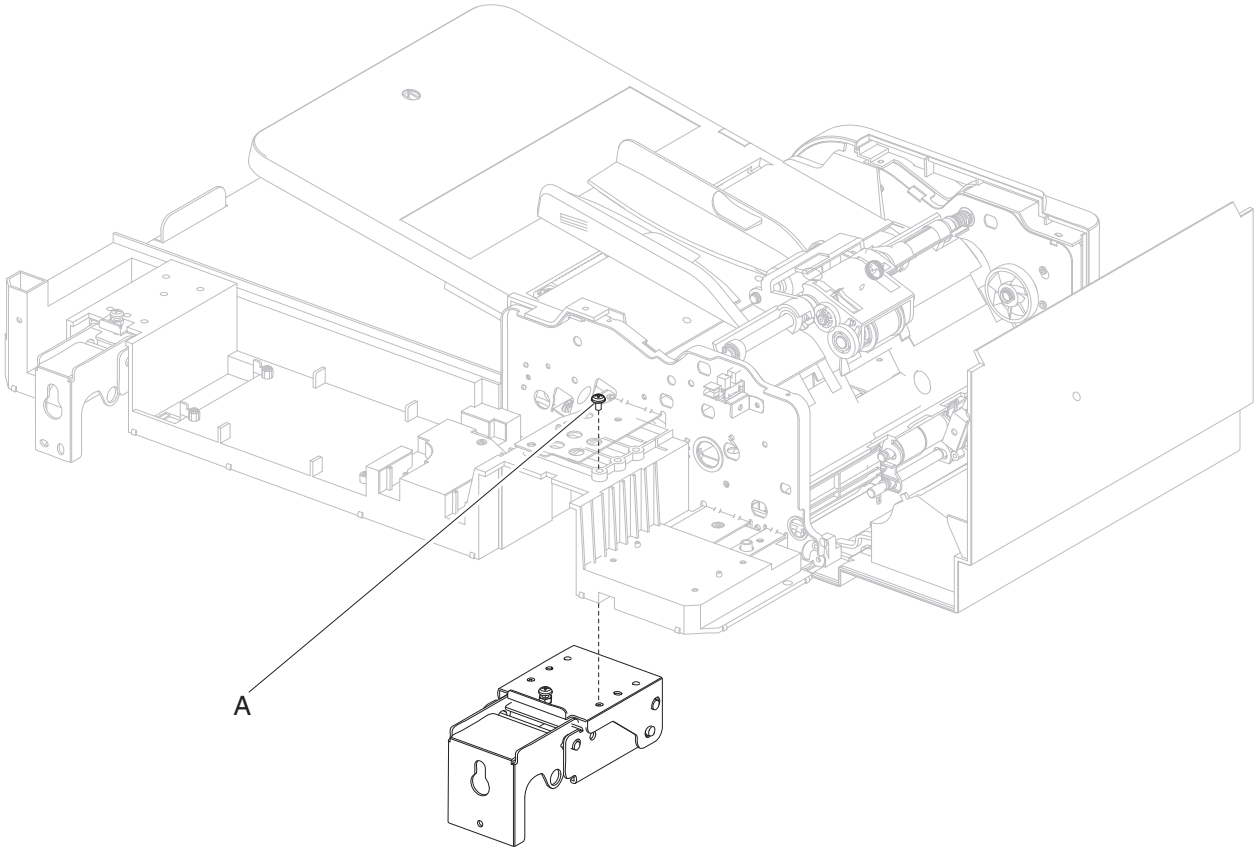

4 Remove the ADF left hinge.

ADF right hinge removal

1 Remove the ADF unit assembly. Go to **“ADF unit assembly removal (models X651, X652, X654, and X656)” on page 560** or **“ADF unit assembly removal (model X658)” on page 561**..

2 Remove the ADF rear cover assembly. Go to **“ADF rear cover removal” on page 538**.

3 Remove the four screws (A) securing the ADF right hinge to the ADF unit assembly.

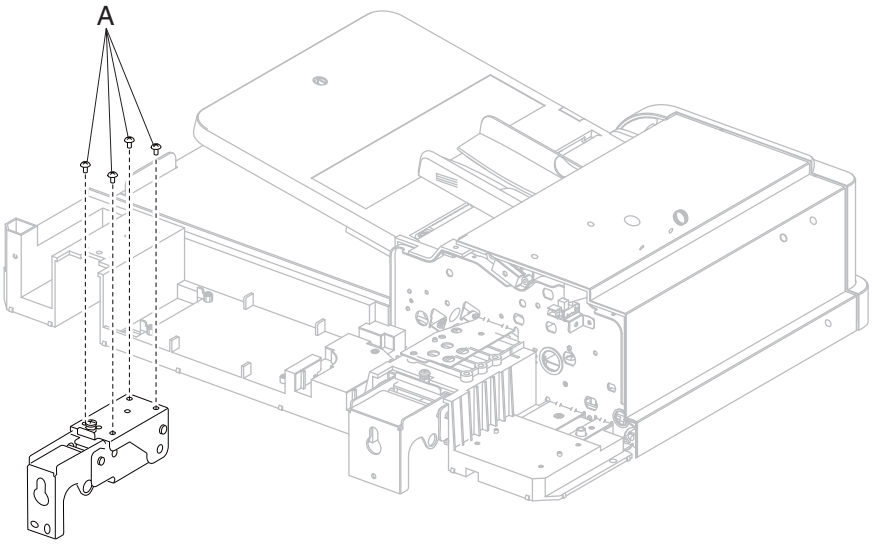

4 Remove the ADF left hinge.

Component locations

Printer configurations

Note: Printer configuration may vary depending on your printer model.

Basic models

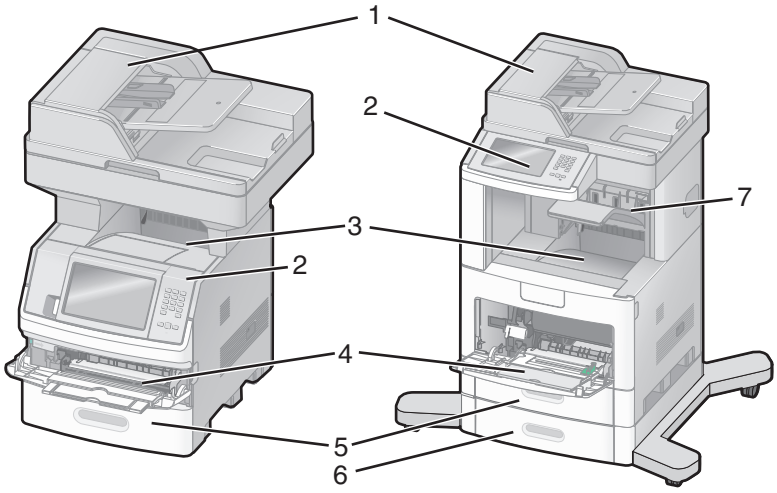

1	Automatic Document Feeder (ADF)
2	Printer control panel
3	Standard exit bin
4	Multipurpose feeder
5	550-sheet tray (Tray 1)
6	550-sheet tray (Tray 2)
7	Optional output bin

Connectors

Controller board

Go to the Wiring diagram section at the last part of this manual.

Maintenance

Inspection guide

The purpose of this inspection guide is to aid you in identifying unsafe conditions.

If any unsafe conditions exist, find out how serious the hazard could be and if you can continue before you correct the hazard.

As you service the machine, check for the following:

- Damaged, missing, or altered parts, especially in the area of the On/Off switch and the power supply
- Damaged, missing, or altered covers, especially in the area of the top cover and the power supply cover
- Possible safety exposure from any non-Lexmark attachments

Lubrication guide

Lubricate only when parts are replaced or as needed, not on a scheduled basis. Use of lubricants other than those specified can cause premature failure. Some unauthorized lubricants may chemically attack polycarbonate parts.

Use the following lubricants to lubricate the appropriate areas except for the fuser drive, ITU, and cartridge drive assemblies:

- IBM no. 10 oil, P/N 1280443 (Approved equivalents: Mobil DTE27, Shell Tellus 100, Fuchs Renolin MR30),
- IBM no. 23 grease (Approved equivalent Shell Darina 1)
- Grease, P/N 99A0394

Use Nyogel type 774 to lubricate the fuser drive assembly and Nyogel 744 to lubricate the ITU and cartridge drive assemblies.

Individual maintenance part expected life

Description	Part	Maintenance interval
Charge roll assembly with tool	40X0127	300K
Transfer roll assembly with tool	40X1886	300K
Pick roll assembly (2)	40X4308	300K
Printer maintenance kit (100 V type 1 fuser)	40X4723	300K
Printer maintenance kit (110 V type 1 fuser)	40X4724	300K
Printer maintenance kit (220 V type 1 fuser)	40X4765	300K
Printer maintenance kit (100 V type 2 fuser)	40X4766	150K
Printer maintenance kit (110 V type 2 fuser)	40X4767	150K
Printer maintenance kit (220 V type 2 fuser)	40X4768	150K
ADF feed/pick roll assembly	40X4540	120K
ADF separator roll and guide	40X4605	120K

Scheduled maintenance

The control panel displays an 80.xy error when it reaches 200K page counts. It is necessary to install the appropriate maintenance kit to maintain the print quality and reliability of the printer. Reset the maintenance counter after replacing the maintenance kit.

Maintenance kits

Description	Part	Maintenance interval
Printer maintenance kit (100-V type 1 fuser)	40X4723	300K
Printer maintenance kit (110-V type 1 fuser)	40X4724	300K
Printer maintenance kit (220-V type 1 fuser)	40X4765	300K
Printer maintenance kit (100-V type 2 fuser)	40X4766	150K
Printer maintenance kit (110-V type 2 fuser)	40X4767	150K
Printer maintenance kit (220-V type 2 fuser)	40X4768	150K
ADF maintenance kit includes: • ADF feed/pick roll assembly • ADF separator roll and guide	40X4769	120K

Scanner maintenance kit

A scanner maintenance kit (40X8778) is available for this printer.

It contains the following FRUs:

- 40X4540—Pick assembly
- 40X3444—Flatbed assembly
- 40X6406—Separator roll kit
- 3033167—Glass cleaner

There is no operator panel message to indicate when this kit needs to be installed.

This kit should be used if the user is experiencing one or more of these issues:

- Page misfeeds in the ADF (skews, fails to pick)
- ADF paper jams
- Streaks appear on scanned copies, but not on printed pages
- Dark spots or blemishes appear on copies from the flatbed

Cleaning the printer parts

Cleaning the exterior of the printer

1 Make sure that the printer is turned off and unplugged from the wall outlet.

CAUTION—SHOCK HAZARD: To avoid the risk of electric shock when cleaning the exterior of the printer, unplug the power cord from the wall outlet and disconnect all cables to the printer before proceeding.

2 Remove paper from the standard exit bin.

3 Dampen a clean, lint-free cloth with water.

Warning—Potential Damage: Do not use household cleaners or detergents, as they may damage the finish of the printer.

4 Wipe only the outside of the printer, making sure to include the standard exit bin.

Warning—Potential Damage: Using a damp cloth to clean the interior may cause damage to your printer.

5 Make sure the paper support and standard exit bin are dry before beginning a new print job.

Cleaning the scanner glass

Clean the scanner glass if you encounter print quality problems, such as streaks on copied or scanned images.

1 Slightly dampen a soft, lint-free cloth or paper towel with water.

2 Open the scanner cover.

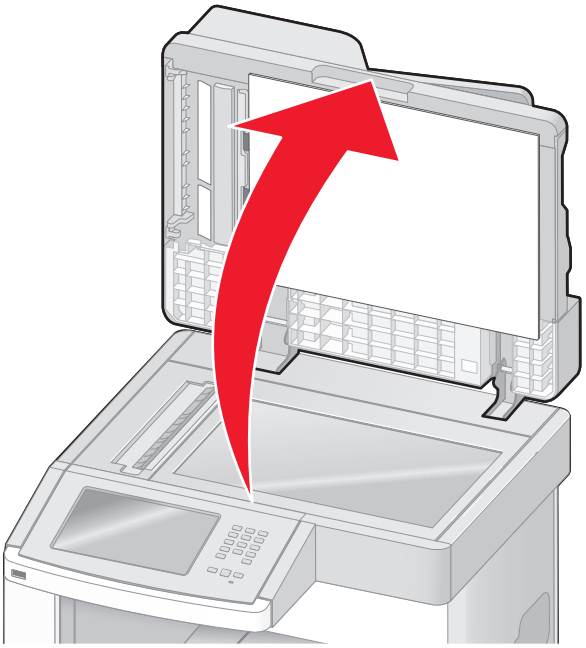

3 Wipe the scanner glass until it is clean and dry.

4 Wipe the white underside of the scanner cover until it is clean and dry.

5 Open the bottom ADF door.

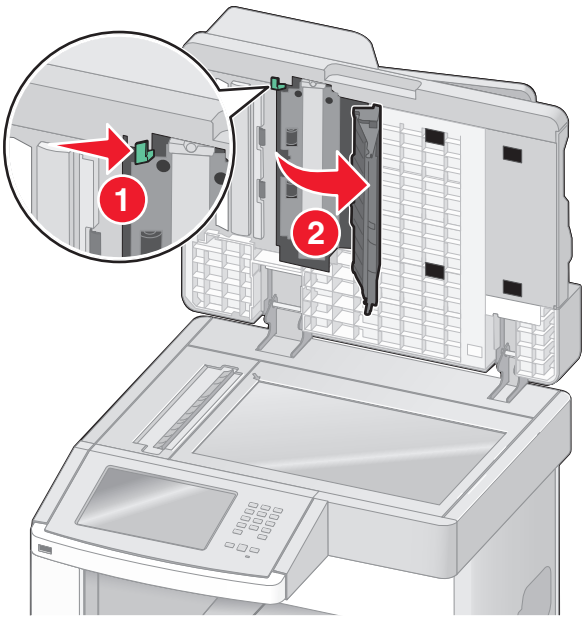

6 Wipe the ADF scanner glass under the ADF door.

7 Close the bottom ADF door.

8 Wipe the scanner glass (flatbed) and backing material by moving the cloth or paper towel from side to side.

9 Close the scanner cover.

Parts catalog

Legend

The following column headings are used in the parts catalog:

- **Asm-index**—Identifies the item in the illustration
- **P/N**—Identifies the part number of a FRU
- **Units/mach**—Refers to the number of units in a printer
- **Units/opt**—Refers to the number of units in an option
- **Units/FRU**—Refers to the number of units in a FRU
- **Description**—A brief description of the part

The following abbreviations are used in the parts catalog:

- **NS** (not shown) in the Asm-index column indicates that the part is procurable but is not shown in the illustration.
- **PP** (parts packet) in the Description column indicates that the part is contained in a parts packet.

Assembly 1: Covers (X651, X652, X654, and X656)

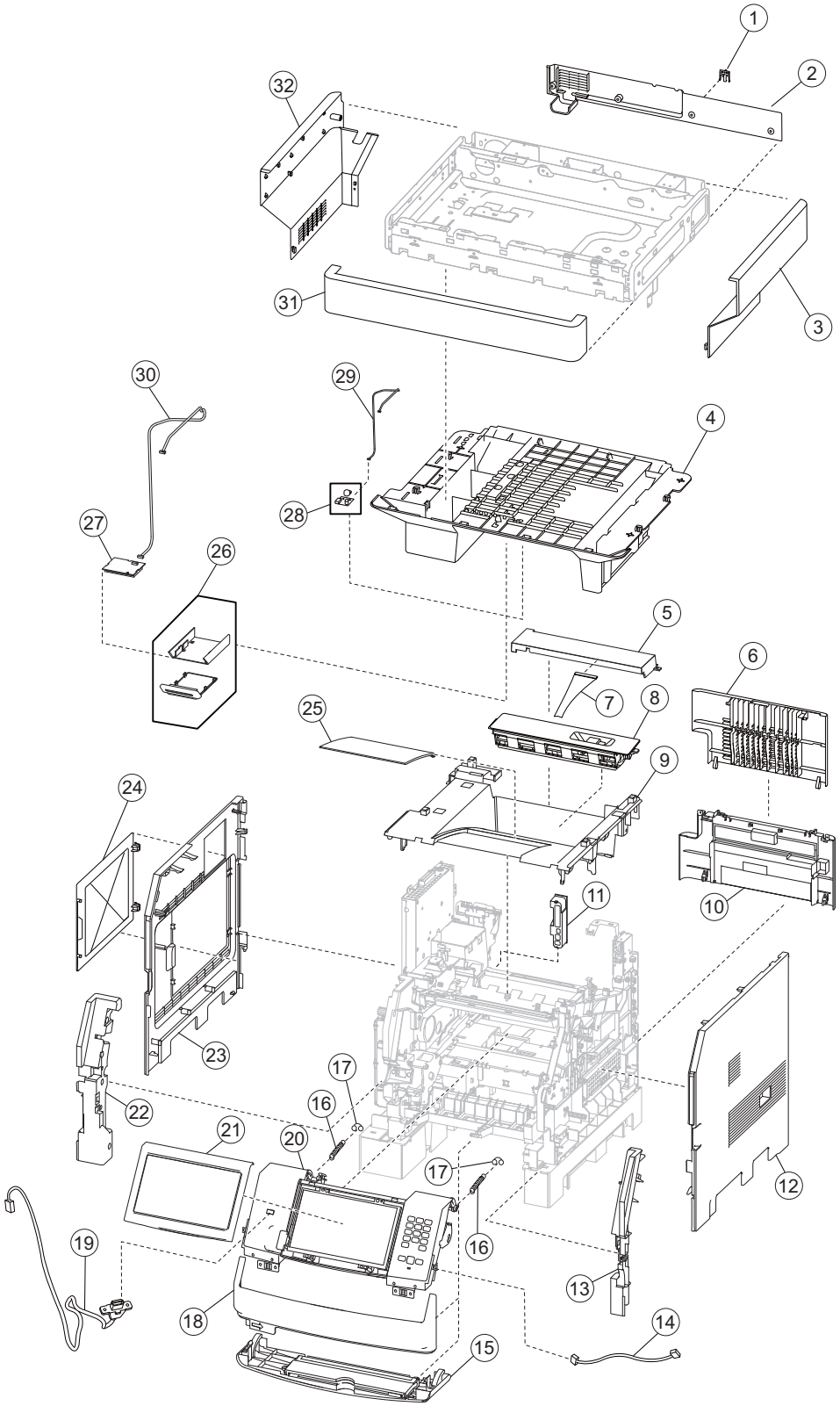

Assembly 1: Covers (X651, X652, X654, and X656)

Asm-index	P/N	Units/mach	Units/FRU	Description	Removal procedure
1	40X2169	1	1	Scanner cover plug, rear (X651)	--
2	40X4506	1	1	Scanner cover, rear	--
3	40X4508	1	1	Scanner cover, right (X651, X652, X654, and X656)	--
4	40X4509	1	1	Scanner support platform (X651, X652, X654, and X656)	--
5	40X1919	1	1	Output cover assembly (X651, X652, X654, and X656)	--
6	40X4331	1	1	Door assembly, rear	--
7	40X4470	1	1	Output bail	--
8	41X4417	1	1	Fuser wiper cover	--
9	40X1918	1	1	Laser cover assembly, 550 sheet(X651, X652, X654, and X656)	--
10	40X4335	1	1	Cover assembly, rear lower	--
11	40X4629	1	1	Connection bezel assembly, rear	--
12	40X1917	1	1	Side cover, right (X651, X652, X654, and X656)	--
13	40X1972	1	1	Inner cover, right (X651, X652, X654, and X656)	--
14	40X2045	1	1	Operator panel cable assembly (X651, X652, X654, and X656)	--
15	40X2089	1	1	MPF tray door assembly (X651, X652, X654, and X656)	--
16	40X2077	2	1	Counter balance spring (X651, X652, X654, and X656)	--
17	40X2078	2	1	Spring connector (X651, X652, X654, and X656)	--
18	40X4631	1	1	Operator panel door latch assembly (MFP X651, X652, X654, and X656)	--
19	40X4377	1	1	USB cable assembly (X651, X652, X654, and X656)	--
20	40X6918	1	1	Operator panel door assembly with hinges (X654 and X656)	--
20	40X2149	1	1	Operator panel door assembly with hinges (X651 and X652)	--
21	40X4000	1	1	X654de touch screen bezel	--
21	40X4121	1	1	X656de touch screen bezel	--

Asm-index	P/N	Units/mach	Units/FRU	Description	Removal procedure
21	40X4123	1	1	X651de touch screen bezel	--
21	40X5757	1	1	X652de touch screen bezel	--
22	40X1971	1	1	Inner cover, left (X651, X652, X654, and X656)	--
23	40X1916	1	1	Side cover, left (X651, X652, X654, and X656)	--
24	40X4481	1	1	Access door (X651, X652, X654, and X656)	--
25	40X1973	1	1	Media support (X651, X652, X654, and X656)	--
26	40X4598	1	1	Card reader cover assembly (X651, X652, X654, and X656)	--
27	40X4604	1	1	Card reader assembly (5125 contact/HID)	--
27	40X4602	1	1	Card reader assembly (3121 contact)	--
27	40X4603	1	1	Card reader assembly (5121 contact/RFID)	--
28	40X2638	1	1	Standard output bin LED assembly (X651, X652, X654, and X656)	--
29	40X2643	1	1	Standard output bin LED cable assembly	--
30	40X4601	1	1	Card reader cable assembly (X651, X652, X654, and X656)	--
31	40X4505	1	1	Scanner cover, front (X651, X652, X654, and X656)	--
32	40X4507	1	1	Scanner cover, left (X651, X652, X654, and X656)	--

Assembly 2: Covers 1 (X658)

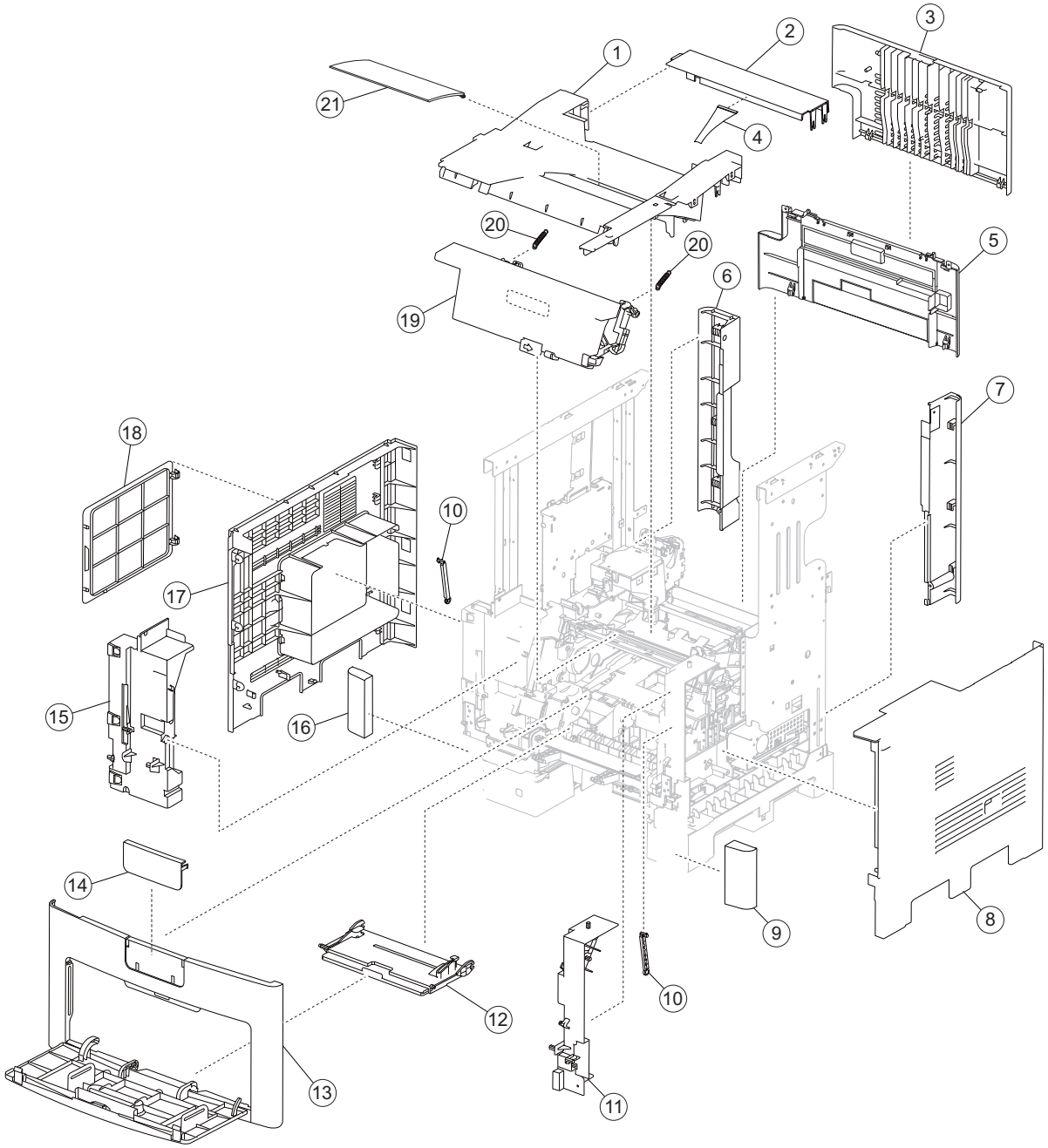

Assembly 2: Covers 1 (X658)

Asm-index	P/N	Units/mach	Units/FRU	Description	Removal procedure
1	40X1970	1	1	Laser cover assembly, 550 sheet (X658)	--
2	40X4480	1	1	Output cover assembly (X658)	--
3	40X4331	1	1	Door assembly, rear	--
4	40X4470	1	1	Output bail	--
5	40X4335	1	1	Cover assembly, rear lower	--
6	40X4477	1	1	Corner cover, left rear (X658)	--
7	40X4479	1	1	Corner cover, right rear (X658)	--
8	40X4478	1	1	Side cover, right (X658)	--
9	40X1976	1	1	Tray cover, right (X658)	--
10	40X4483	2	1	MPF tray cover support strap (X658)	--
11	40X4485	1	1	Inner cover, right (X658)	--
12	40X7047	1	1	MPF media guide assembly (X658)	--
13	40X2016	1	1	MPF tray cover assembly (X658)	--
14	40X1915	1	1	Model door bezel (X658)	--
15	40X4484	1	1	Inner cover, left (X658)	--
16	40X1975	1	1	Tray cover, left (X658)	--
17	40X4476	1	1	Side cover, left (X658)	--
18	40X4475	1	1	Access door (X658)	--
19	40X1977	1	1	Print cartridge cover assembly (X658)	--
20	40X4489	2	1	Print cartridge recoil spring (X658)	--
21	40X2017	1	1	Media support (X658)	--

Assembly 3: Covers 2 (X658)

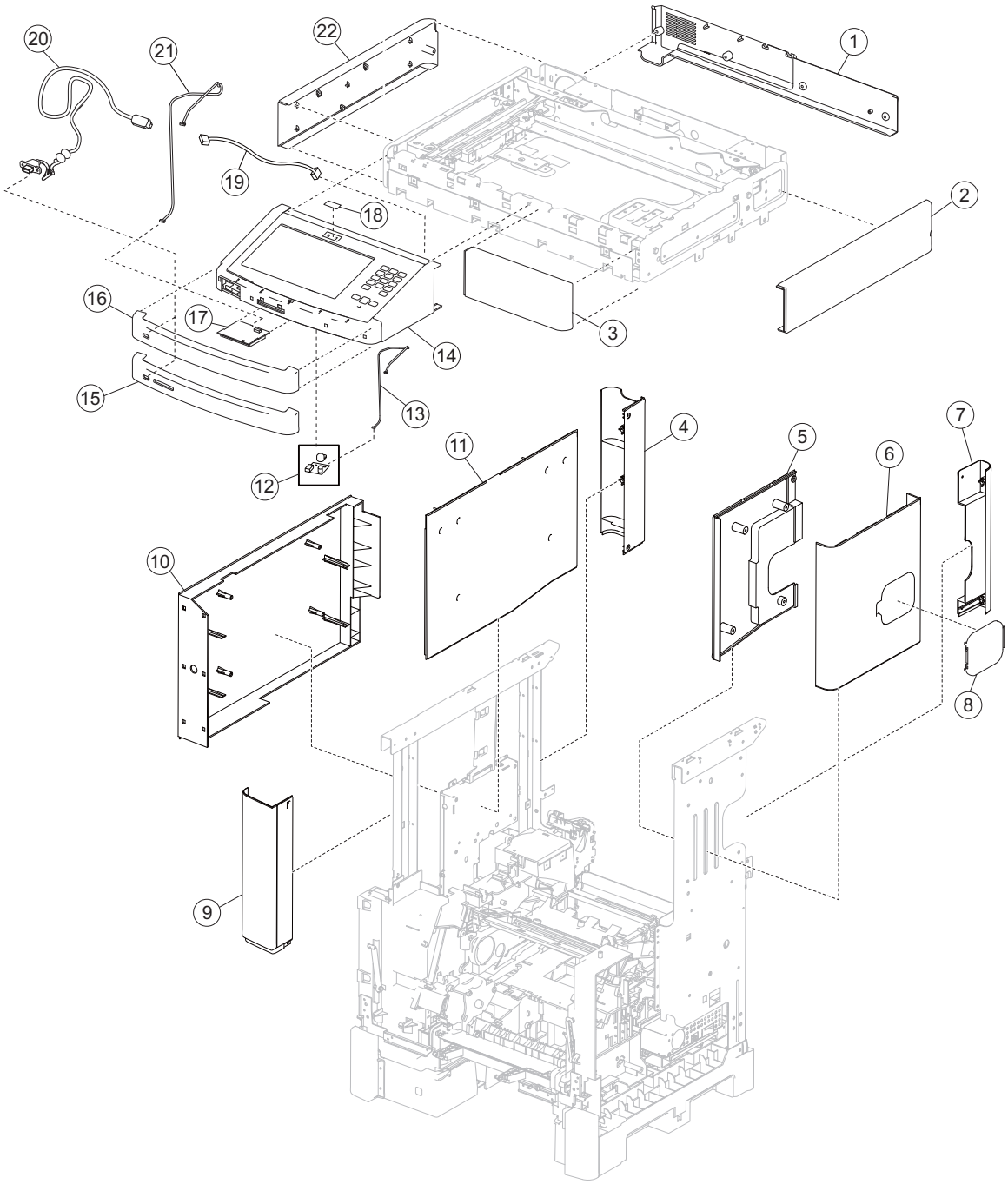

Assembly 3: Covers 2 (X658)

Asm-index	P/N	Units/mach	Units/FRU	Description	Removal procedure
1	40X4510	1	1	Scanner cover, rear (X658)	--
2	40X4511	1	1	Scanner cover, right (X658)	--
3	40X4513	1	1	Scanner cover, front (X658)	--
4	40X4516	1	1	Scanner support cover, left rear (X658)	--
5	40X4520	1	1	Scanner support inner cover, right (X658)	--
6	40X4517	1	1	Scanner support cover, right (X658)	--
7	40X4518	1	1	Scanner support cover, right rear (X658)	--
8	40X1974	1	1	Stapler access cover (X658)	--
9	40X4514	1	1	Scanner support cover, left front (X658)	--
10	40X4515	1	1	Scanner support cover, left (X658)	--
11	40X4519	1	1	Scanner support inner cover, left (X658)	--
12	40X4525	1	1	Standard output bin LED assembly	--
13	40X4499	1	1	Standard output bin LED cable assembly (X656)	--
14	40X7044	1	1	Operator panel assembly (X658)	--
15	40X4599	1	1	Operator panel cover with card reader slot (X658)	--
16	40X2018	1	1	Operator panel front cover (X658)	--
17	40X4602	1	1	Card reader assembly (3121 contact)	--
17	40X4603	1	1	Card reader assembly (5121 contact/RFID)	--
17	40X4604	1	1	Card reader assembly (5125 contact/HID)	--
18	40X4491	1	1	Operator panel bezel (X658)	--
19	40X4492	1	1	Operator panel cable assembly (X658)	--
20	40X4500	1	1‘	USB cable assembly (X658)	--
21	40X4600	1	1	Card reader cable assembly (X658)	--
22	40X4512	1	1	Scanner cover, left (X658)	--

Assembly 4: Media path and ducts

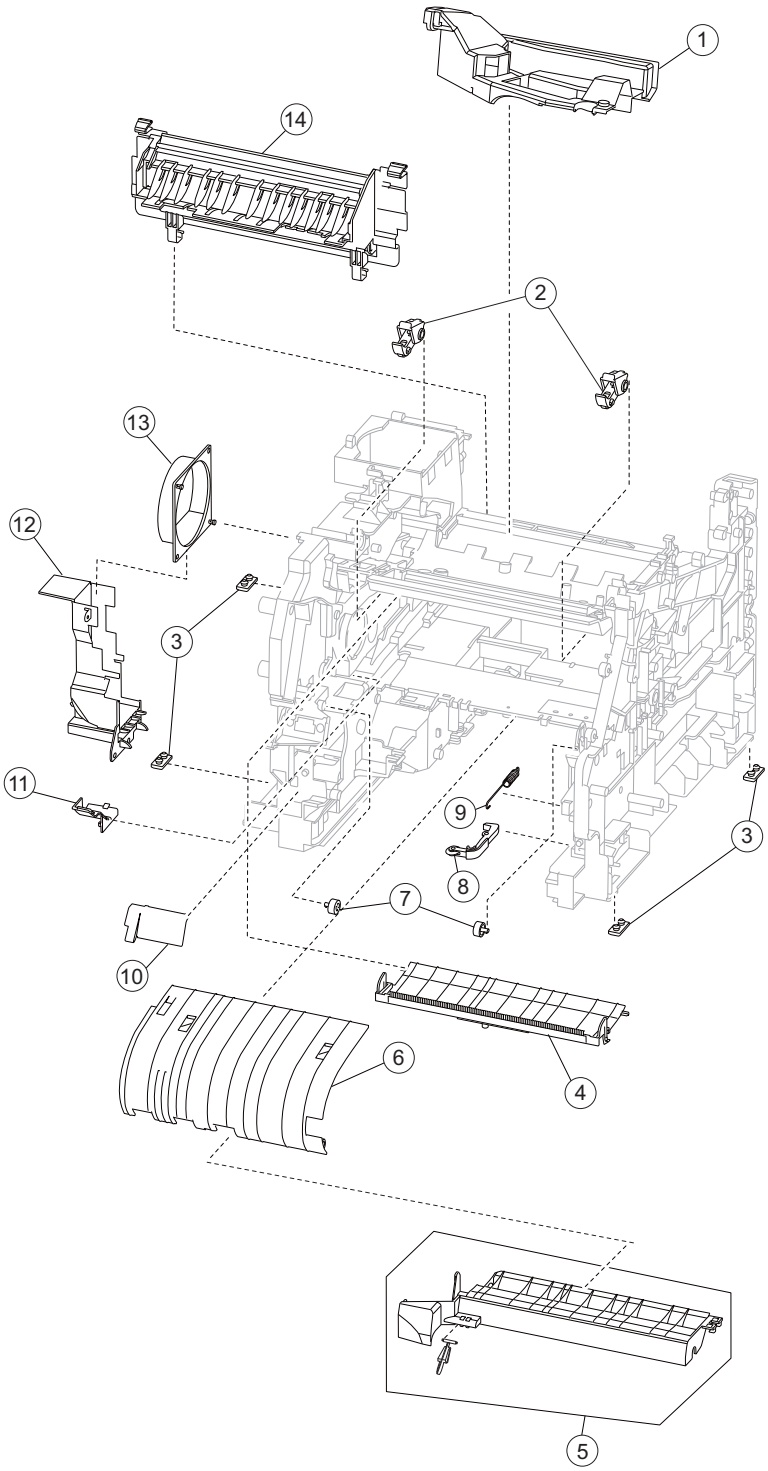

Assembly 4: Media path and ducts

Asm-index	P/N	Units/mach	Units/FRU	Description	Removal procedure
1	40X4384	1	1	EP cooling fan duct	--
2	40X1868	2	1	Print cartridge clamp assembly	--
3	40X4390	4	1	Machine pad	--
4	40X1869	1	1	Transfer deflector with static brush	--
5	40X1900	1	1	Media turn guide with actuator	--
6	40X4388	1	1	Inner deflector	--
7	40X4406	2	1	Print cartridge support roller	--
8	40X4395	1	1	Tray roller catch assembly	--
9	40X4394	1	1	Tray catch spring	--
10	40X4385	1	1	Envelope feeder interface cover (X658 only)	--
11	40X1876	1	1	MPF gear shield	--
12	40X4389	1	1	LVPS cooling duct	--
13	40X4486	1	1	Main cooling fan duct (X658DE)	--
13	40X4392	1	1	Main cooling duct (X651, X652, X654, and X656)	--
14	40X4318	1	1	Fuser access door assembly	--

Assembly 5: Pick arm and media tray assemblies

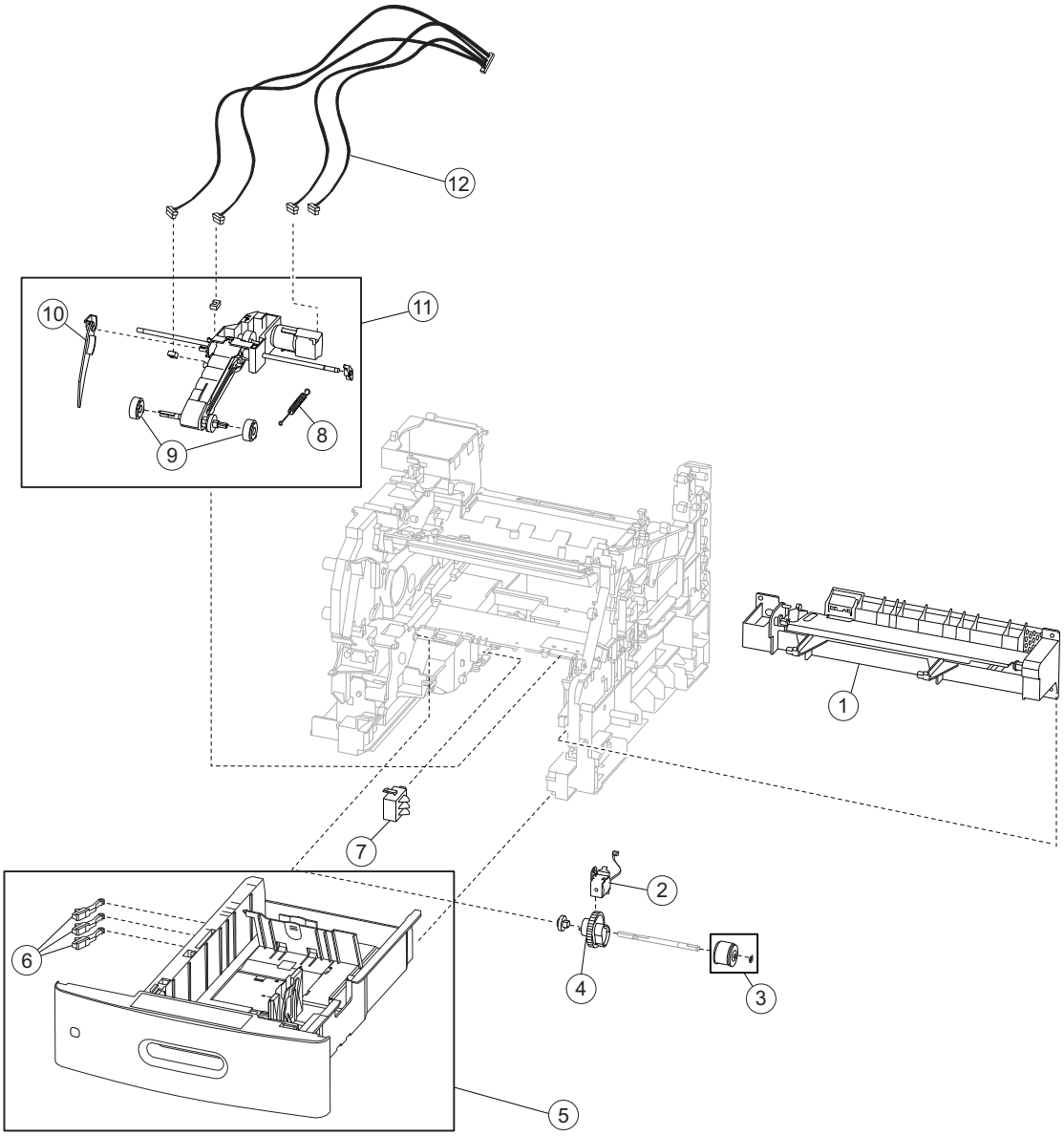

Assembly 5: Pick arm and media tray assemblies

Asm-index	P/N	Units/mach	Units/FRU	Description	Removal procedure
1	40X4459	1	1	MPF lift plate assembly (X651, X652, X654, and X656)	--
1	40X4425	1	1	MPF lift plate assembly with spring (X658)	--
2	40X6994	1	1	MPF pick solenoid assembly	--
3	40X1883	1	1	MPF pick roll assembly with flange and clip	--
4	40X4457	1	1	MPF cam gear	--
5	40X5786	1	1	Media tray assembly, 550 sheet (X651, X652, X654, and X656)	--
5	40X2164	1	1	Media tray assembly (X658)	--
6	40X6932	3	1	Tray size sensing actuator	--
7	40X4472	1	1	Switch (media size assembly)	--
8	40X4307	1	1	Pick arm spring	--
9	40X4308	1	2	Pick roll assembly (2)	--
10	40X4310	1	1	550 Sheet media out actuator	--
11	40X4305	1	1	550 Sheet pick arm assembly with spring	--
12	40X4313	1	1	Pick arm sensor cable assembly	--

Assembly 6: Drive motor assembly, redrive, and duplex

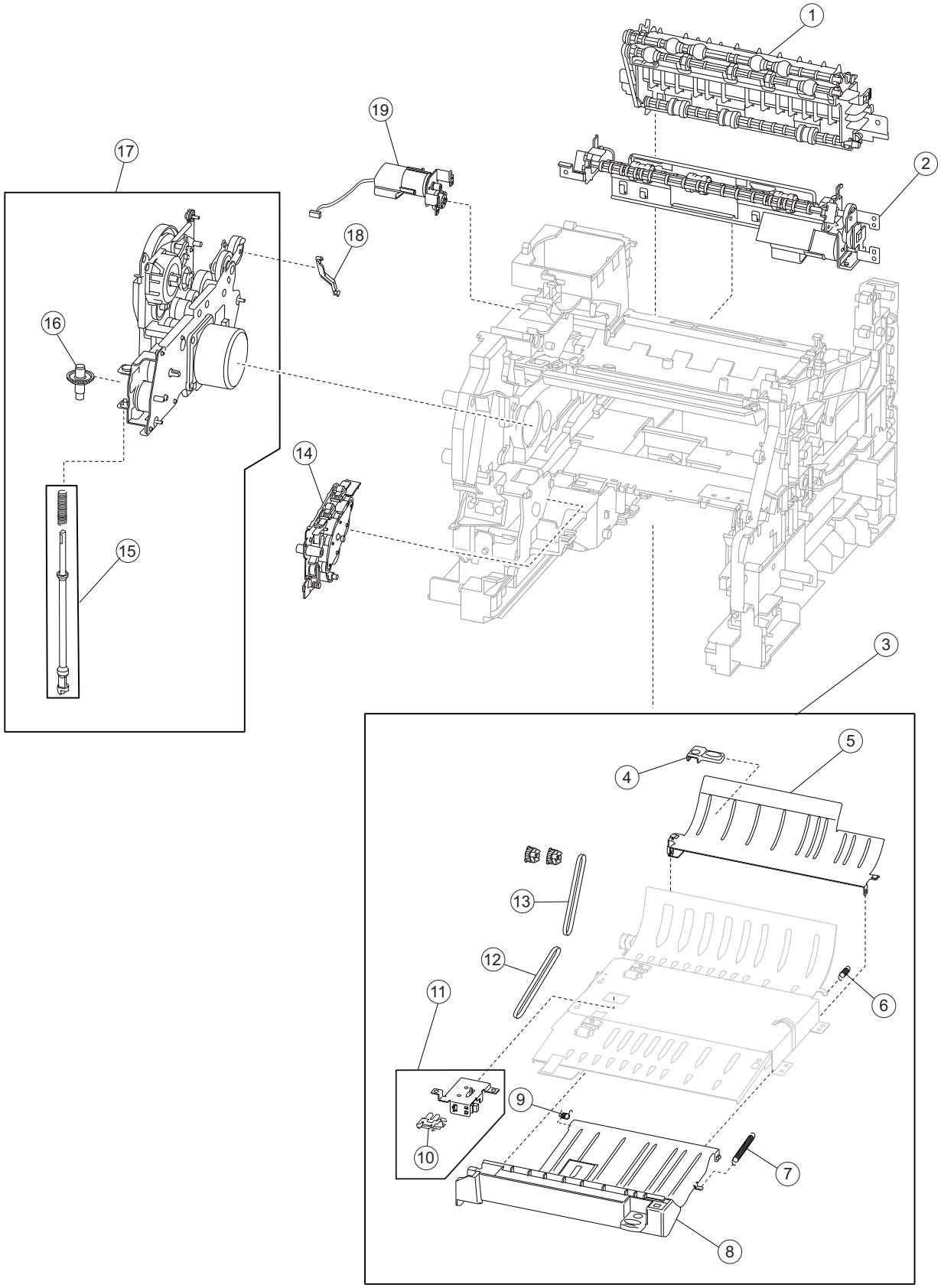

Assembly 6: Drive motor assembly, redrive, and duplex

Asm-index	P/N	Units/mach	Units/FRU	Description	Removal procedure
1	40X4467	1	1	Redrive assembly	--
2	40X5851	1	1	Duplex drive motor assembly	--
3	40X4346	1	5	Duplex assembly with 2 belts and 2 pulleys	--
4	40X4351	1	1	Duplex guide handle	--
5	40X4352	1	1	Duplex guide, rear	--
6	40X4353	1	1	Duplex guide spring, rear	--
7	40X4349	1	1	Duplex guide spring, right	--
8	40X4348	1	1	Duplex guide assembly, front	--
9	40X5551	1	1	Duplex guide spring, left	--
10	40X4369	1	1	Sensor (duplex input)	--
11	40X4345	1	1	Duplex input sensor assembly	--
12	40X4350	1	1	Duplex drive belt, lower	--
13	40X4354	1	1	Duplex drive belt, upper	--
14	40X4303	1	3	Alignment assembly with ground strap and adj. screw	--
15	40X4473	1	2	Option drive shaft with spring	--
16	99A0954	1	1	Bevel gear with grease packet and washer • Bevel gear (1) • Instruction sheet (1) • Grease packet (1)	--
17	40X5749	1	1	Main drive motor assembly with option drive shaft	--
18	40X4386	1	1	Fuser drive release linkage	--
19	40X5850	1	1	Redrive motor assembly	--

Assembly 7: Printhead, charge, and transfer assembly

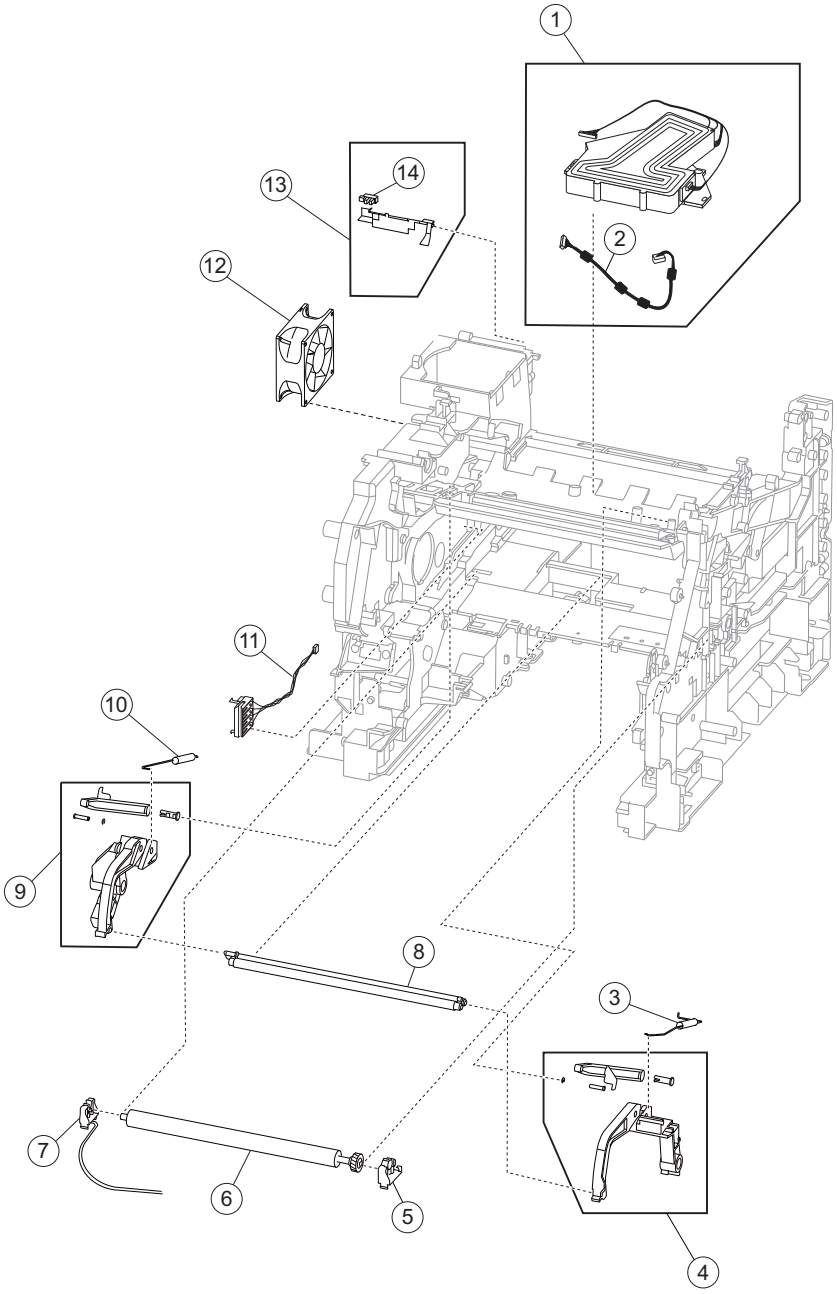

Assembly 7: Printhead, charge, and transfer assembly

Asm-index	P/N	Units/mach	Units/FRU	Description	Removal procedure
1	40X4464	1	2	Printhead with cable assembly	--
2	40X1865	1	1	Printhead cable assembly	--
3	40X4317	1	1	Charge roll link spring, right	--
4	40X1893	1	1	Charge roll arm assembly with cable, right	--
5	40X1888	1	2	Transfer roll bracket assembly, right	--
6	40X1886	1	1	Transfer roll assembly with tool	--
7	40X1887	1	2	Transfer roll bracket with cable assembly, left	--
8	40X0127	1	1	Charge roll assembly with tool	--
9	40X1892	1	1	Charge roll arm assembly, left	--
10	40X4316	1	1	Charge roll link spring, left	--
11	40X1864	1	1	Print cartridge ID connector assembly	--
12	40X4364	1	1	Main cooling fan	--
13	40X4372	1	1	Sensor (standard bin exit) actuator assembly	--
14	40X4369	1	1	Sensor (standard bin exit)	--

Assembly 8: System card, HVPS and scanner controller card assemblies

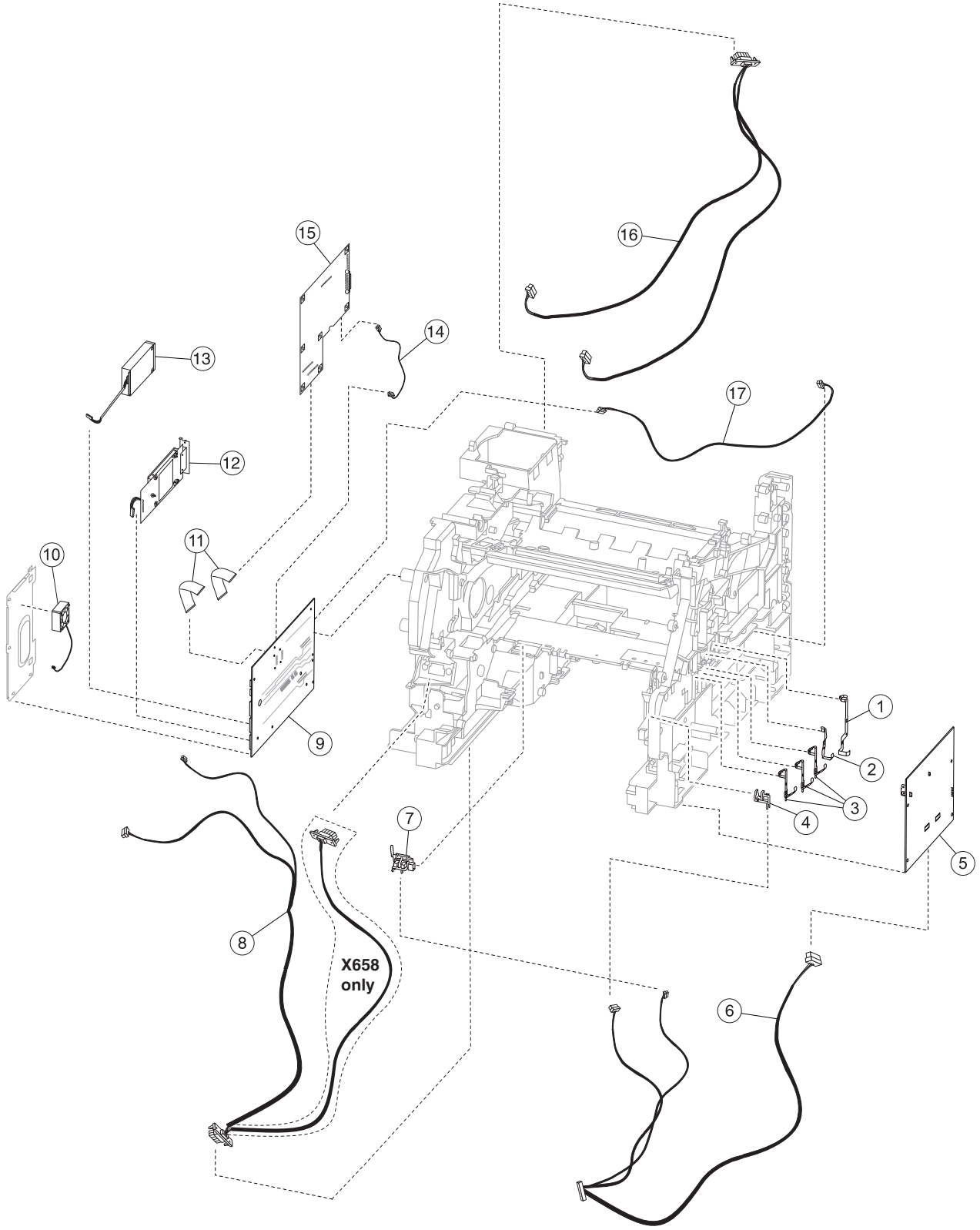

Assembly 8: System card, HVPS and scanner controller card assemblies

Asm-index	P/N	Units/mach	Units/FRU	Description	Removal procedure
1	40X4383	1	1	Cleaning blade contact	--
2	40X4381	1	1	Drum grounding contact	--
3	40X4382	3	1	Print cartridge HV contact	--
4	40X4370	1	1	Sensor (toner empty)	--
5	40X4362	1	1	HVPS card assembly	--
6	40X4361	1	1	HVPS / sensor cable assembly	--
7	40X8673	1	1	Sensor (input)	--
8	40X5848	1	1	Envelope / input option cable assembly (X658)	--
8	40X2019	1	1	Envelope / input option cable assembly (X651, X652, X654, and X656)	--
9	40X6392	1	1	System card assembly	--
10	40X7035	1	1	Hard drive cooling fan	--
11	40X4493	2	1	Scanner controller card interface cable assembly	--
12	40X4822	1	1	Hard drive assembly with board	--
13	40X4821	1	1	Fax modem assembly with board	--
14	40X4496	1	1	Scanner controller card power cable assembly	--
15	40X2074	1	1	Scanner controller card assembly (X651 and X652)	--
15	40X2075	1	1	Scanner controller card assembly (X654, X656, and X658)	--
16	40X4376	1	1	Output option interface cable assembly (X658)	--
17	40X4498	1	1	LVPS cooling fan cable assembly	--

Warning—Potential Damage: Only replace one component at a time, when replacing any of these components -- Scanner interface card assembly, system card assembly, and scanner unit assembly. Replace the required component and perform a POR before replacing a second component listed above. If this procedure is not followed, the printer will be rendered inoperable. Never replace two or more of the components listed above without a POR after installing each one or the printer will be rendered inoperable. These components can be used as a method of troubleshooting as long as the machine is booted into diagnostic mode or is operating in diagnostic mode. Once a component has been installed in a machine and powered up into user mode, it cannot be used in another machine. It must be returned to the manufacturer.

Assembly 9: Fuser and LVPS card assemblies

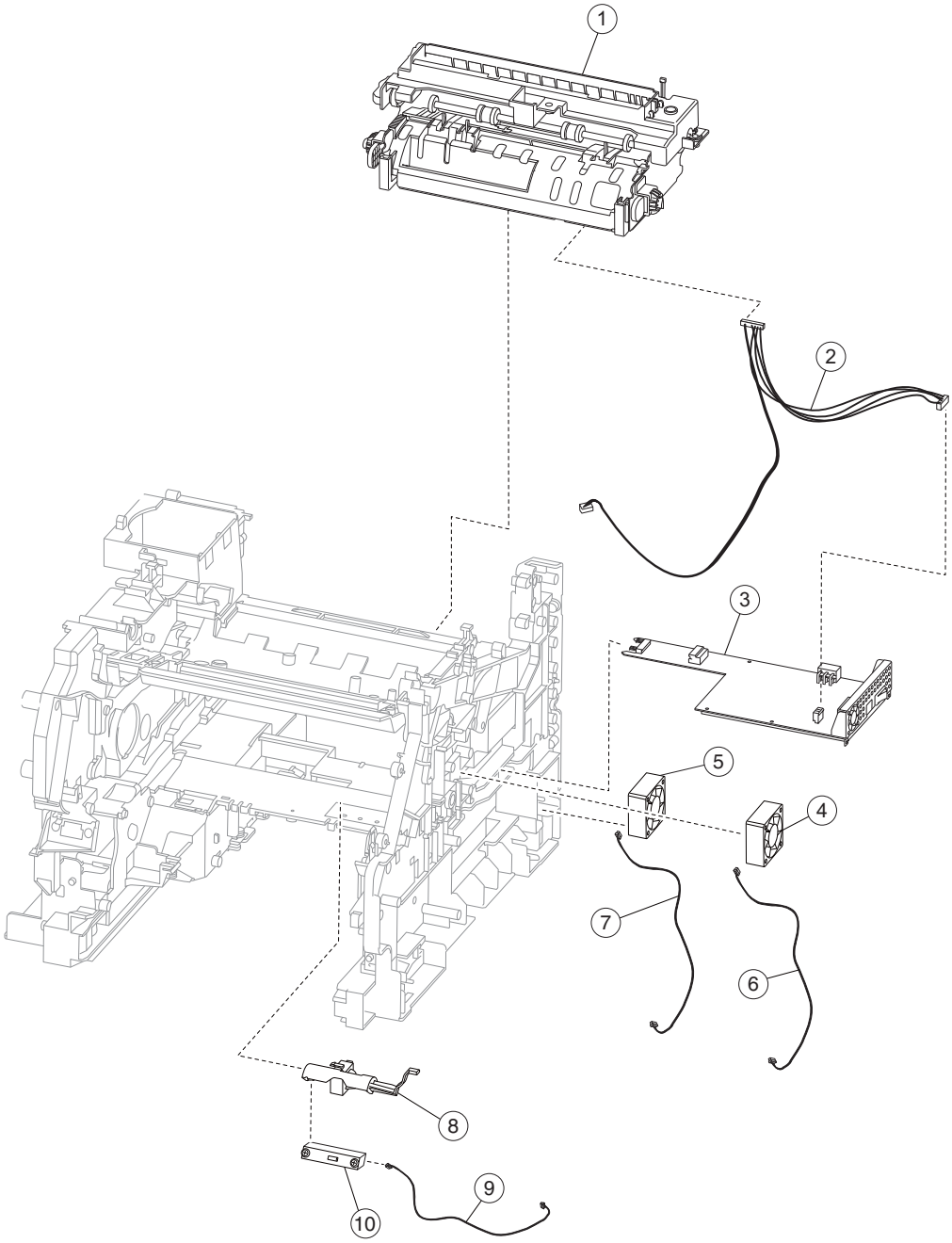

Assembly 9: Fuser and LVPS card assemblies

Asm-index	P/N	Units/mach	Units/FRU	Description	Removal procedure
1	40X1870	1	1	Fuser assembly 100V, type 1	--
1	40X4418	1	1	Fuser assembly 110V, type 1	--
1	40X1871	1	1	Fuser assembly 220V, type 1	--
1	40X5853	1	1	Fuser assembly 100V, type 2	--
1	40X5854	1	1	Fuser assembly 110V, type 2	--
1	40X5855	1	1	Fuser assembly 220V, type 2	--
2	40X4419	1	1	Fuser interface cable assembly	--
3	40X2062	1	1	LVPS card assembly (X651, X652, X654, and X656)	--
3	40X2072	1	1	LVPS card assembly (X658)	--
4	40X4359	1	1	Print cartridge cooling fan	--
5	40X4356	1	1	Duplex cooling fan	--
6	40X4360	1	1	Print cartridge cooling fan cable assembly	--
7	40X4357	1	1	Duplex cooling fan cable assembly	--
8	40X1866	1	1	Sensor shield assembly	--
9	40X4379	1	1	Toner density sensor cable assembly	--
10	40X4378	1	1	Sensor (toner density)	--

Assembly 10: Flatbed scanner

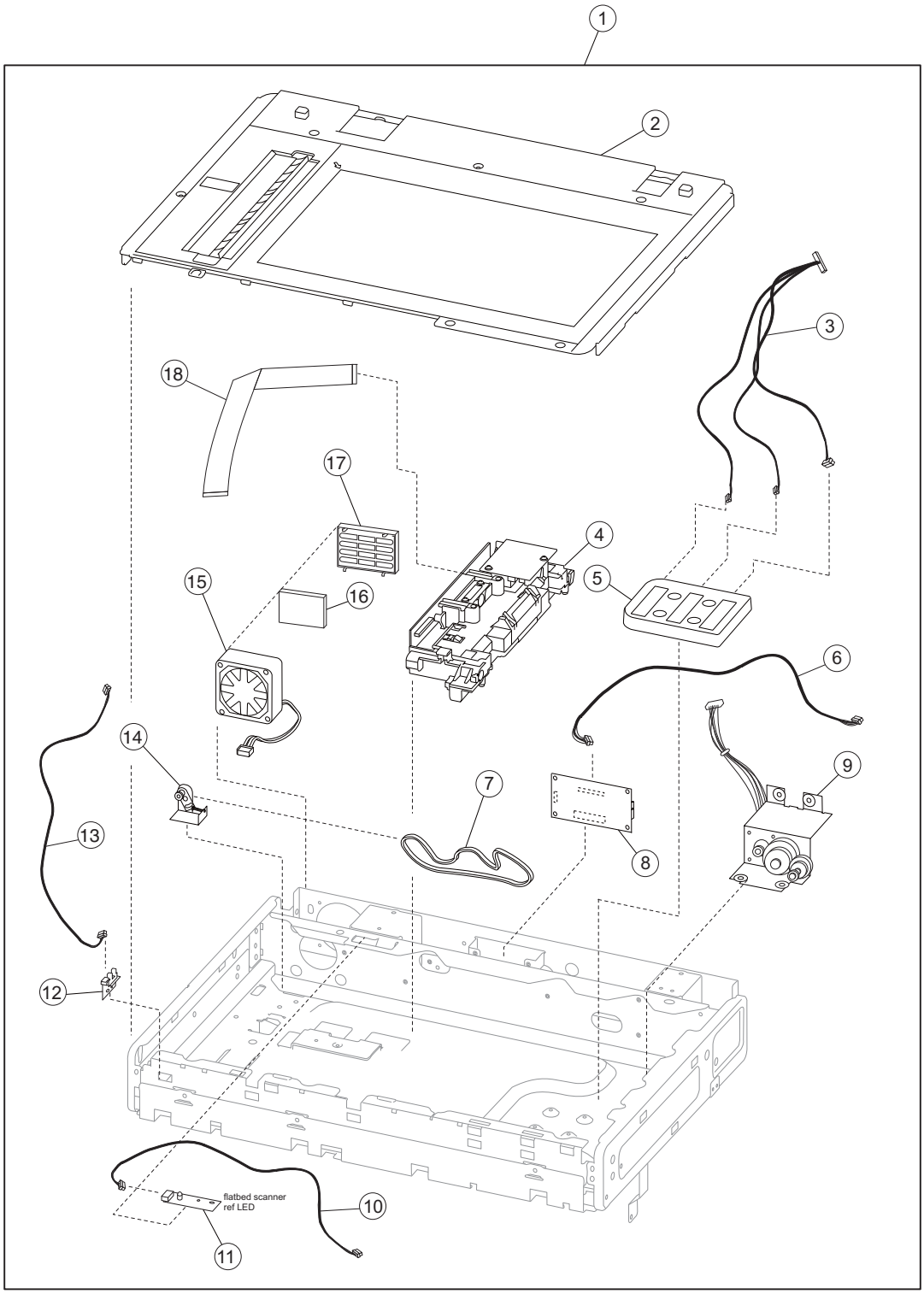

Assembly 10: Flatbed scanner

Asm-index	P/N	Units/mach	Units/FRU	Description	Removal procedure
1	40X6393	1	1	Scanner LED assembly (X651, X652, X654, and X656)	--
1	40X6394	1	1	Scanner LED assembly (X658)	--
2	40X2642	1	1	Scanner platen glass cover assembly	--
3	40X4530	1	1	Scanner FB length sensor cable assembly	--
4	40X6396	1	1	Scanner LED module	--
5	40X4534	1	1	Sensor (platen glass length) assembly	--
6	40X2641	1	1	Flatbed scanner interface card cable (X651, X652, X654, and X656)	--
6	40X4533	1	1	Flatbed scanner interface card cable (X658)	--
7	40X4523	1	1	Carriage belt	--
8	40X2171	1	1	Scanner interface card assembly	--
9	40X4521	1	1	Carriage drive motor assembly with cable	--
10	40X4528	1	1	Scanner reference LED cable assembly	--
11	40X4532	1	1	Scanner reference LED assembly	--
12	40X4524	1	1	Sensor (scanner HP) with bracket	--
13	40X4529	1	1	Scanner HP sensor cable assembly	--
14	40X4522	1	1	Carriage belt tensioner assembly	--
15	40X4535	1	1	Scanner cooling fan	--
16	40X4536	1	1	Scanner cooling fan filter	--
17	40X7204	1	1	Scanner filter cover	--
18	40X4531	1	1	Scanner CCD ribbon cable (X658)	--
18	40X2172	1	1	Scanner CCD ribbon cable (X651, X652, X654, and X656)	--

Warning—Potential Damage: Only replace one component at a time, when replacing any of these components -- Scanner interface card assembly, system card assembly, and scanner unit assembly. Replace the required component and perform a POR before replacing a second component listed above. If this procedure is not followed, the printer will be rendered inoperable. Never replace two or more of the components listed above without a POR after installing each one or the printer will be rendered inoperable. These components can be used as a method of troubleshooting as long as the machine is booted into diagnostic mode or is operating in diagnostic mode. Once a component has been installed in a machine and powered up into user mode, it cannot be used in another machine. It must be returned to the manufacturer.

Assembly 11: ADF unit assembly

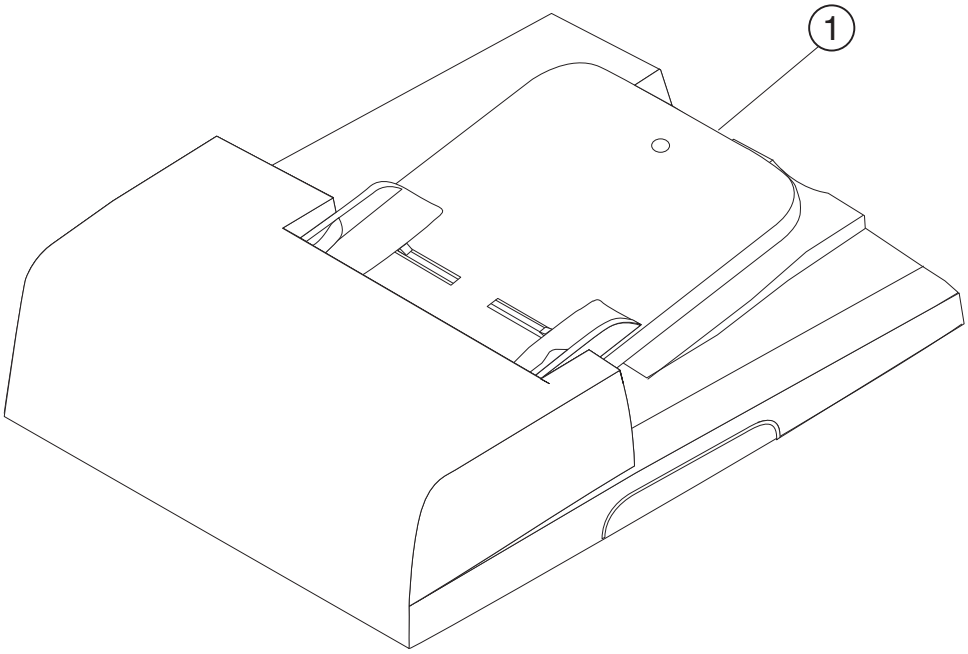

Assembly 11: ADF unit assembly

Asm-index	P/N	Units/mach	Units/FRU	Description	Removal procedure
1	40X6481	1	1	ADF unit assembly (X651 and X652)	--
1	40X6395	1	1	ADF unit assembly (X658)	--
1	40X7005	1	1	ADF unit assembly (X654 and X656)	--

Assembly 12: ADF covers

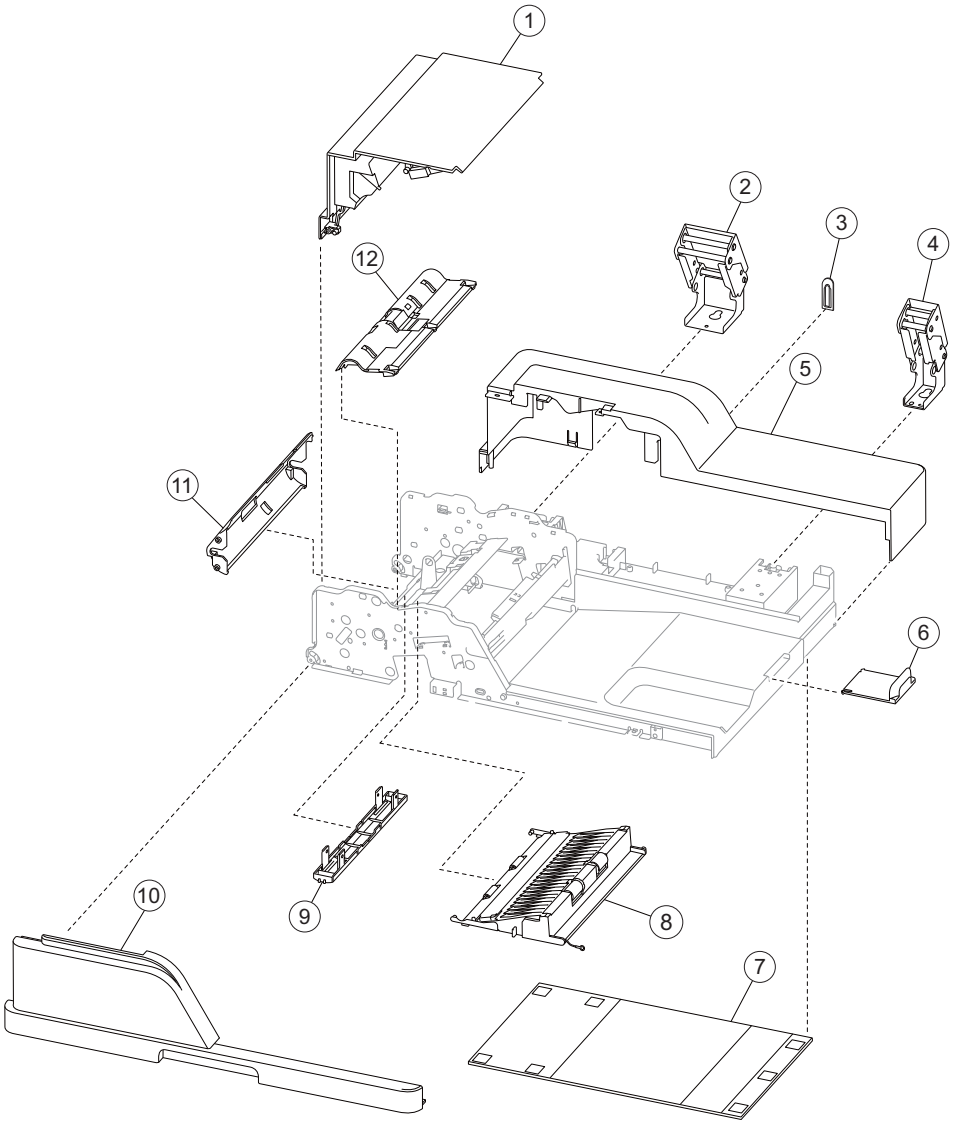

Assembly 12: ADF covers

Asm-index	P/N	Units/mach	Units/FRU	Description	Removal procedure
1	40X4537	1	1	ADF top door assembly	--
2	40X3439	1	1	Left hinge assembly	--
3	40X2746	1	1	ADF cover cap, rear left (X651 and X652)	--
4	40X4563	1	1	Right hinge assembly	--
5	40X4539	1	1	ADF cover, rear	--
6	40X4564	1	1	Document tray extension	--
7	40X3444	1	1	ADF platen cushion	--
8	40X3392	1	1	ADF lower door assembly (X651 and X652)	--
8	40X3438	1	1	ADF lower door assembly (X654, X656, and X658)	--
9	40X3445	1	1	Media pinch pad assembly	--
10	40X4538	1	1	ADF cover, front	--
11	40X4566	1	1	ADF turn guide	--
12	40X4562	1	1	Pick pad cover assembly	--

Assembly 13: ADF feed and drive

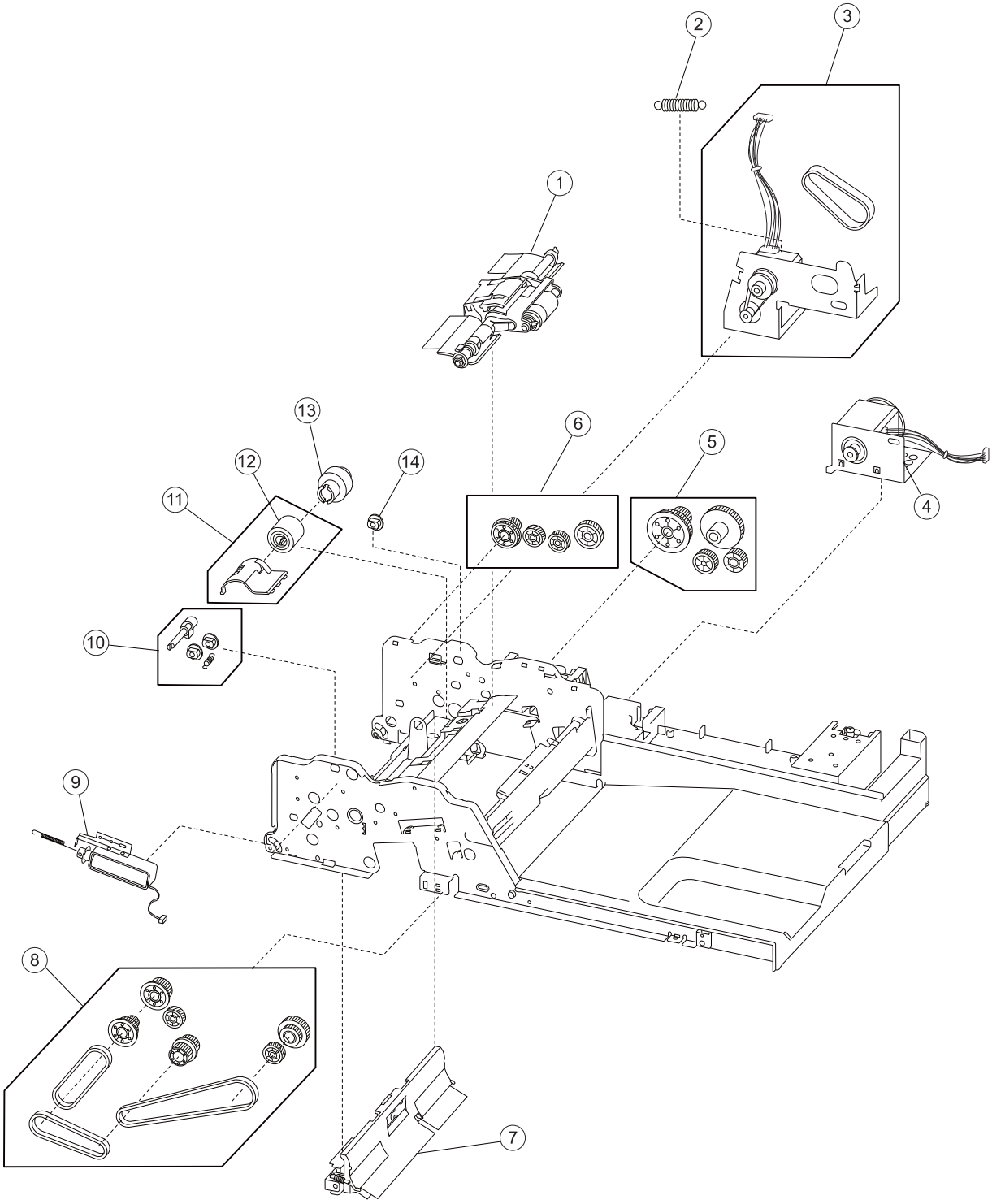

Assembly 13: ADF feed and drive

Asm-index	P/N	Units/mach	Units/FRU	Description	Removal procedure
1	40X4540	1	1	ADF feed / pick roll assembly	--
2	40X4545	1	1	Spring	--
3	40X7213	1	3	Feed motor assembly with belt and cable	--
4	40X4544	1	1	Transport motor bracket assembly with cable	--
5	40X2759	1	4	Transport drive gear and pulley kit, rear	--
6	40X2749	1	4	Feed one-way bearing and gear kit	--
7	40X4542	1	1	Pinch roll assembly	--
8	40X2760	1	9	Transport drive gear, pulley, and belt kit, front	--
9	40X4548	1	1	ADF solenoid assembly	--
10	40X2761	1	4	Pick roll position cam assembly	--
11	40X4605	1	2	ADF separator roll and guide	--
12	40X6406	1	1	ADF separator roll	--
13	40X7214	1	1	Torque limiter	--
14	40X2750	1	1	Bushing 6 mm	--

Assembly 14: ADF electronics

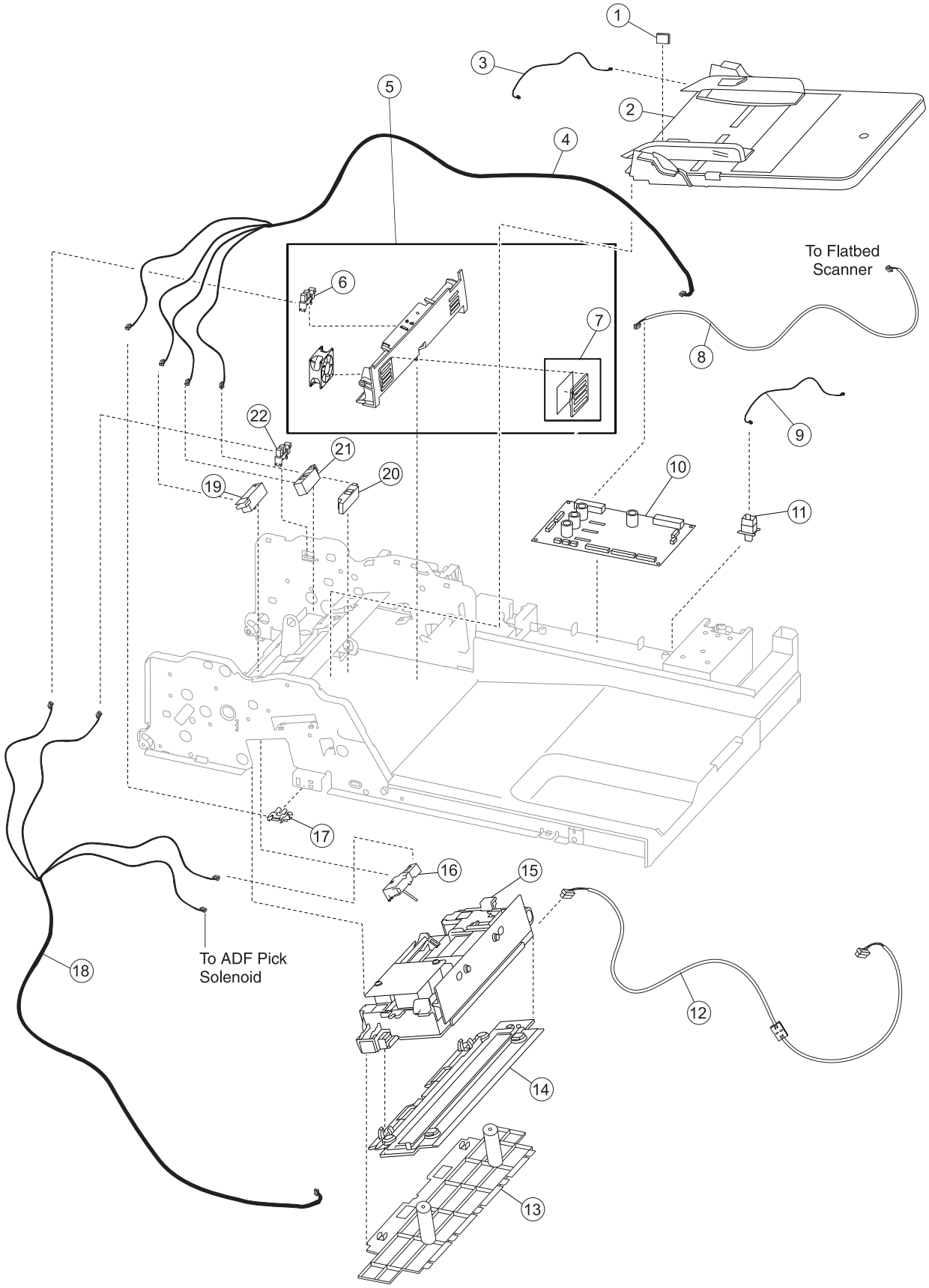

Assembly 14: ADF electronics

Asm-index	P/N	Units/mach	Units/FRU	Description	Removal procedure
1	40X6398	1	1	Spacer	--
2	40X4561	1	1	ADF document tray assembly	--
3	40X4559	1	1	ADF tray length cable assembly	--
4	40X4558	1	1	ADF sensor cable assembly 1	--
5	40X4606	1	1	Sensor (ADF media exit) bracket assembly (X651 and X652)	--
5	40X4607	1	1	Sensor (ADF media exit) bracket assembly with fan (X654, X656, and X658)	--
6	40X4549	1	1	Sensor (ADF media exit)	--
7	40X4608	1	1	ADF filter and cover (X654, X656, and X658)	--
8	40X4556	1	1	ADF interface cable assembly	--
9	40X4557	1	1	ADF closed interlock switch cable assembly	--
10	40X3142	1	1	ADF controller card assembly	--
11	40X4554	1	1	Switch (ADF closed interlock)	--
12	40X4555	1	1	Duplex CCD interface cable assembly with toroid (X654, X656, and X658)	--
13	40X3272	1	1	ADF duplex deletion insert (X651 and X652)	--
14	40X4565	1	1	ADF duplex CCD scan glass assembly (X654, X656, and X658)	--
15	40X6397	1	1	ADF LED module (X654, X656, and X658)	--
16	40X2762	1	1	Sensor (ADF 2nd scan)	--
17	40X4549	1	1	Sensor (ADF lower door interlock)	--
18	40X4560	1	1	ADF sensor cable assembly 2	--
19	40X4550	1	1	Sensor (ADF 1st scan)	--
20	40X4551	1	1	Sensor (ADF document set)	--
21	40X4550	1	1	Sensor (ADF sheet through)	--
22	40X4549	1	1	Sensor (ADF top door interlock)	--

Assembly 15: 250-Sheet option tray assembly (X651, X652, X654, and X656)

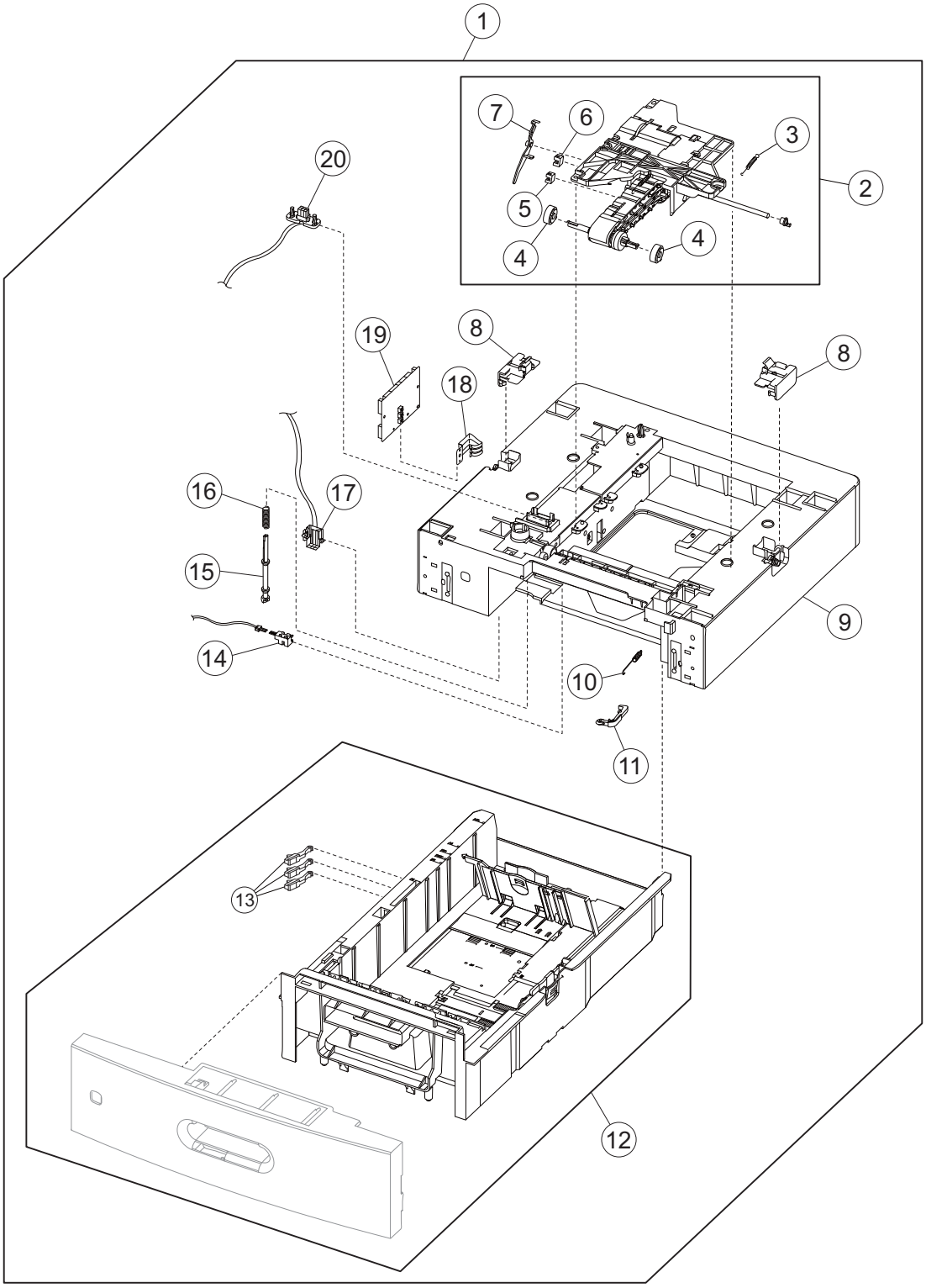

Assembly 15: 250-Sheet option tray assembly (X651, X652, X654, and X656)

Asm-index	P/N	Units/mach	Units/FRU	Description	Removal procedure
1	40X4569	1	1	Complete 250 sheet option tray assembly	--
2	40X3447	1	1	250 Sheet pick arm bracket assembly	--
3	40X3448	1	1	250 Sheet bellcrank recoil spring	--
4	40X4308	2	1	Pick roll assembly (2)	--
5	40X4369	1	1	Sensor (media low)	--
6	40X4369	1	1	Sensor (media empty)	--
7	40X5840	1	1	250 Sheet media out actuator (X651 and X652)	--
8	40X4570	1	1	Anti-tip latch assembly	--
9	40X3453	1	1	250 Sheet option drawer assembly	--
10	40X3822	1	1	Media tray catch spring	--
11	40X4395	1	1	Media tray roller catch assembly	--
12	40X6391	1	1	Media tray assembly, 250 sheet	--
13	40X6932	3	1	Tray size sensing actuator	--
14	40X4575	1	1	Sensor (pass through) with cable	--
15	99A0272	1	1	250 option drive shaft with spring	--
16	99A0275	1	1	Spring	--
17	40X4572	1	1	Lower interface cable assembly	--
18	40X3854	1	1	Media size actuator	--
19	40X4574	1	1	250-sheet tray controller card assembly	--
20	40X4571	1	1	Upper interface cable assembly	--

Assembly 16: 550 Sheet option tray assembly (X651, X652, X654, and X656)

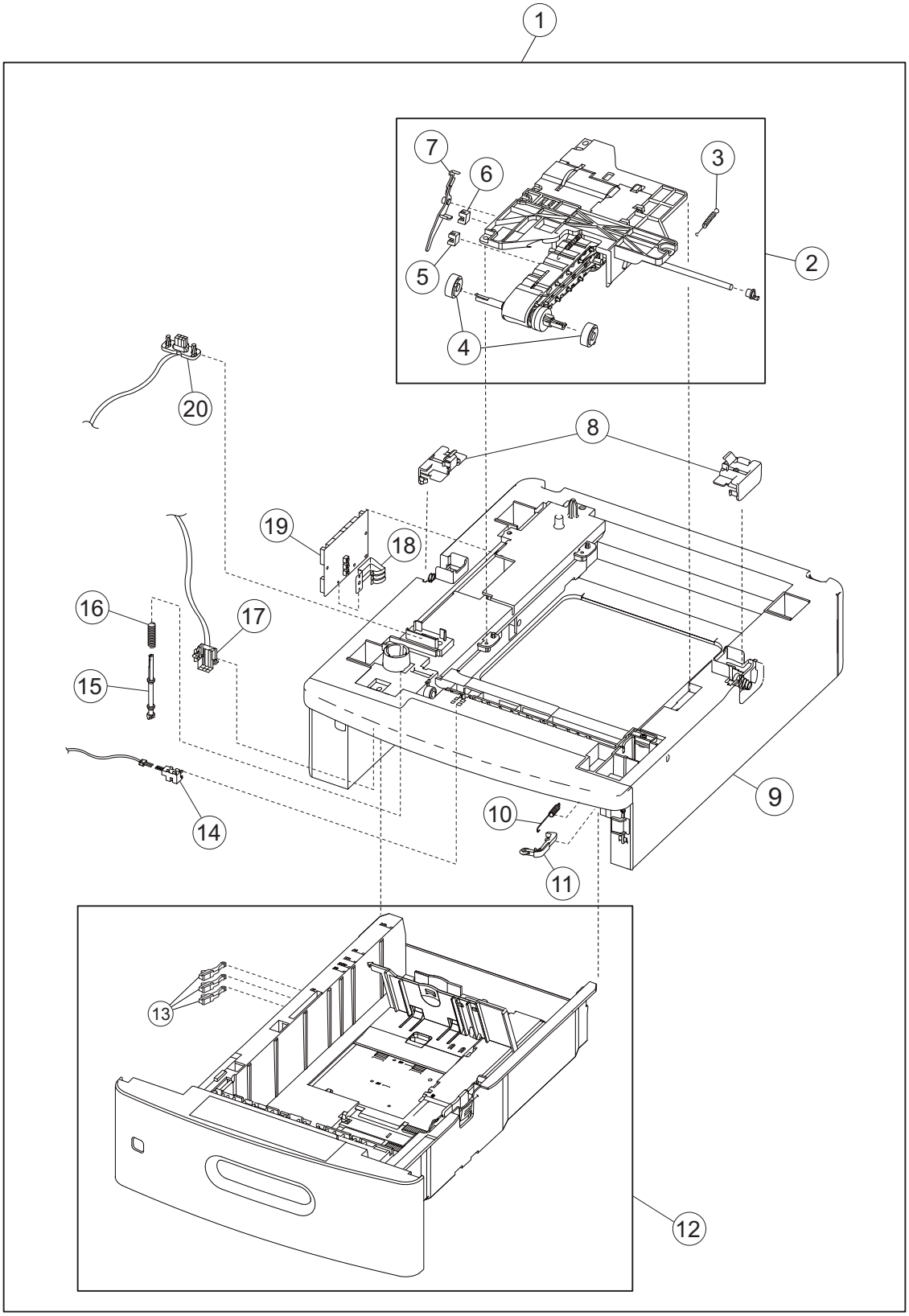

Assembly 16: 550 Sheet option tray assembly (X651, X652, X654, and X656)

Asm-index	P/N	Units/mach	Units/FRU	Description	Removal procedure
1	40X4576	1	1	Complete 550 sheet option tray assembly	--
2	40X3454	1	1	550 Sheet pick arm bracket assembly	--
3	40X4307	1	1	550 Sheet bellcrank recoil spring	--
4	40X4308	1	2	Pick roll assembly (2)	--
5	40X4369	1	1	Sensor (media low)	--
6	40X4369	1	1	Sensor (media empty)	--
7	40X4310	1	1	550 Sheet media out actuator	--
8	40X4570	2	2	Anti-tip latch assembly	--
9	40X3957	1	1	550 Sheet option drawer assembly	--
10	40X3822	1	1	Media tray catch spring	--
11	40X4395	1	1	Media tray roller catch assembly	--
12	40X5786	1	1	Media tray assembly, 550 sheet	--
13	40X6932	3	1	Tray size sensing actuator	--
14	40X4575	1	1	Sensor (pass through) with cable	--
15	99A0447	1	1	550 Option drive shaft	--
16	99A0275	1	1	Spring	--
17	40X4572	1	1	Lower interface cable assembly	--
18	40X3854	1	1	Media size actuator	--
19	40X4578	1	1	550 Sheet controller card assembly	--
20	40X4571	1	1	Upper interface cable assembly	--

Assembly 17: 550-Sheet option tray assembly (X658)

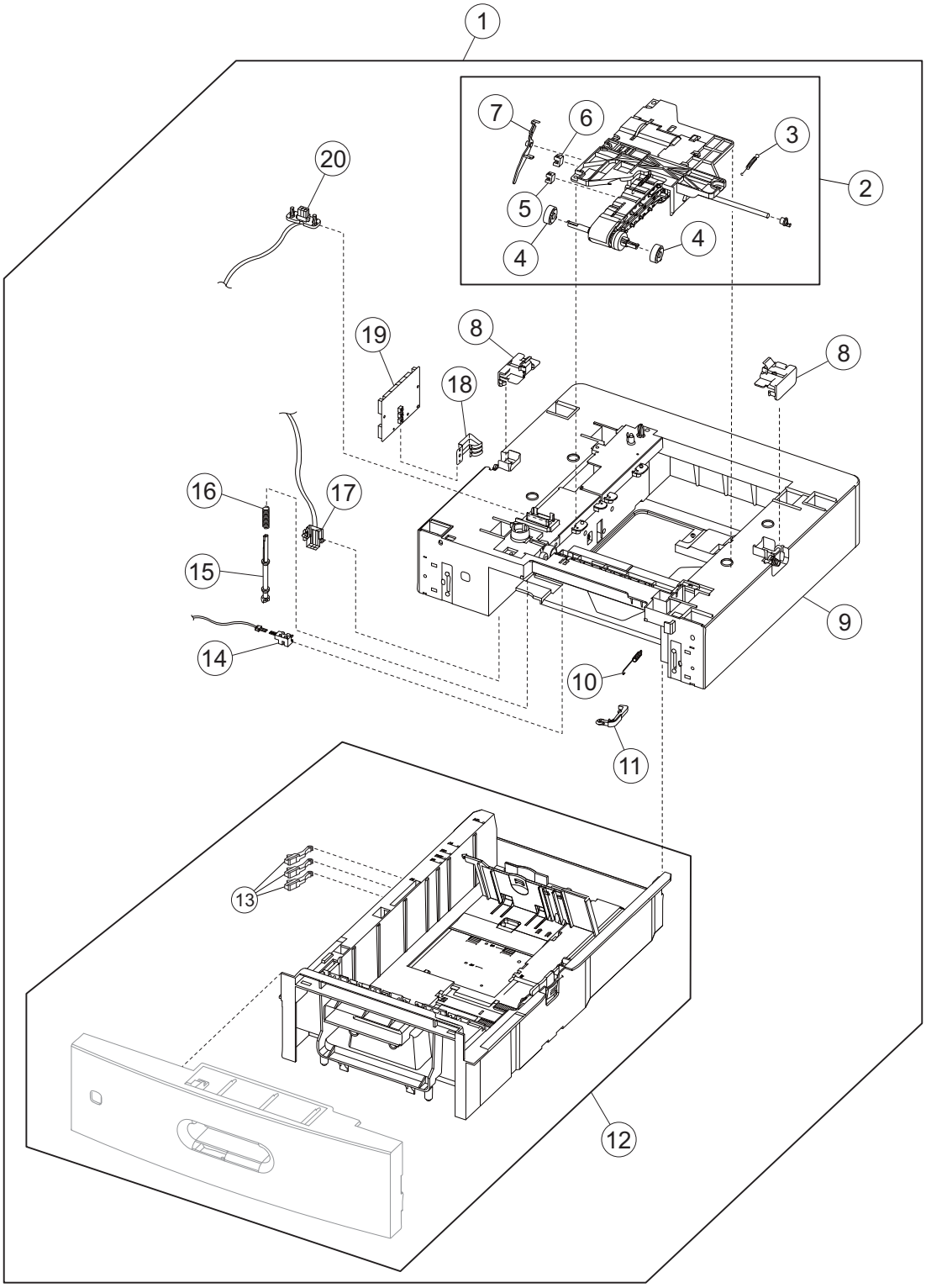

Assembly 17: 550-Sheet option tray assembly (X658)

Asm-index	P/N	Units/mach	Units/FRU	Description	Removal procedure
1	40X3967	1	1	Complete 550 sheet option tray assembly (X658)	--
2	40X3454	1	1	550 Sheet pick arm bracket assembly	--
3	40X4307	1	1	550 Sheet bellcrank recoil spring	--
4	40X4308	1	2	Pick roll assembly (2)	--
5	40X4369	1	1	Sensor (media low)	--
6	40X4369	1	1	Sensor (media empty)	--
7	40X4310	1	1	550 Sheet media out actuator	--
8	40X4570	2	2	Anti-tip latch assembly	--
9	40X5843	1	1	550 Sheet option drawer assembly	--
10	40X3822	1	1	Media tray catch spring	--
11	40X4395	1	1	Media tray roller catch assembly	--
12	40X2164	1	1	Media tray assembly, 550 sheet	--
13	40X6932	3	1	Tray size sensing actuator	--
14	40X4575	1	1	Sensor (pass through) with cable	--
15	99A0447	1	2	550 Option drive shaft	--
16	99A0275	1	1	Spring	--
17	40X4572	1	1	Lower interface cable assembly	--
18	40X3854	1	1	Media size actuator	--
19	40X4578	1	1	550 Sheet tray controller card assembly	--
20	40X4571	1	1	Upper interface cable assembly	--

Assembly 18: HCIT assembly (X651, X652, X654, and X656)

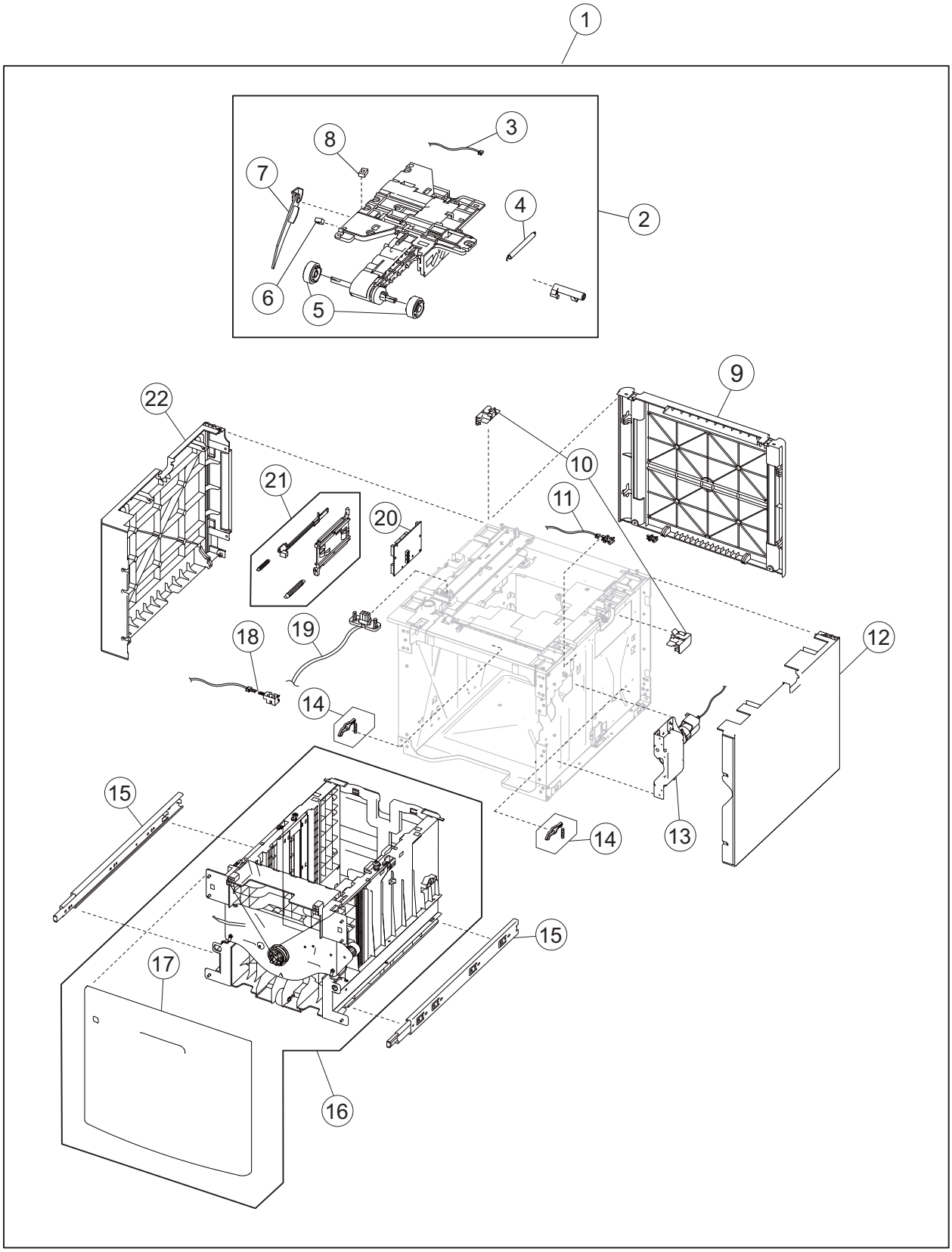

Assembly 18: HCIT assembly (X651, X652, X654, and X656)

Asm-index	P/N	Units/mach	Units/FRU	Description	Removal procedure
1	40X4579	1	1	Complete HCIT option tray assembly	--
2	40X4590	1	2	HCIT pick arm bracket assembly	--
3	40X4595	1	1	Pick arm sensor cable assembly	--
4	40X4591	1	1	HCIT bellcrank recoil spring	--
5	40X4308	2	2	Pick roll assembly (2)	--
6	40X4369	2	1	Sensor (media low)	--
7	40X8310	1	1	HCIT media out actuator	--
8	40X4369	2	1	Sensor (media empty)	--
9	40X4581	1	1	HCIT cover, rear	--
10	40X4570	1	1	Anti-tip latch assembly	--
11	40X4588	1	1	Sensor (HCIT tray raised HP) with cable assembly	--
12	40X4582	1	1	HCIT cover, right	--
13	40X4586	1	1	HCIT tray lift drive motor assembly	--
14	40X4585	1	2	HCIT tray closed latch with spring	--
15	40X4593	2	1	HCIT drawer slide assembly	--
16	40X4580	1	2	HCIT media tray assembly	--
17	40X4584	1	1	HCIT tray cover, front	--
18	40X4589	1	2	Sensor (HCIT pass through) with cable	--
19	40X4594	1	1	HCIT interface cable assembly	--
20	40X4592	1	1	HCIT controller card assembly	--
21	40X4587	1	4	HCIT media size actuator assembly	--
22	40X4583	1	1	HCIT cover, left	--

Assembly 19: MFP stapler assembly #1

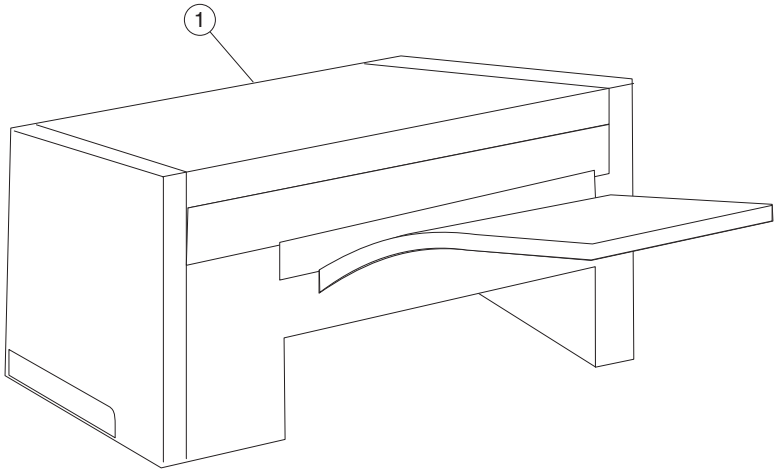

Assembly 19: MFP stapler assembly #1

Asm-index	P/N	Units/mach	Units/FRU	Description	Removal procedure
1	40X7026	1	1	MFP stapler assembly (comes completely assembled)	--

Assembly 20: MFP stapler assembly #2

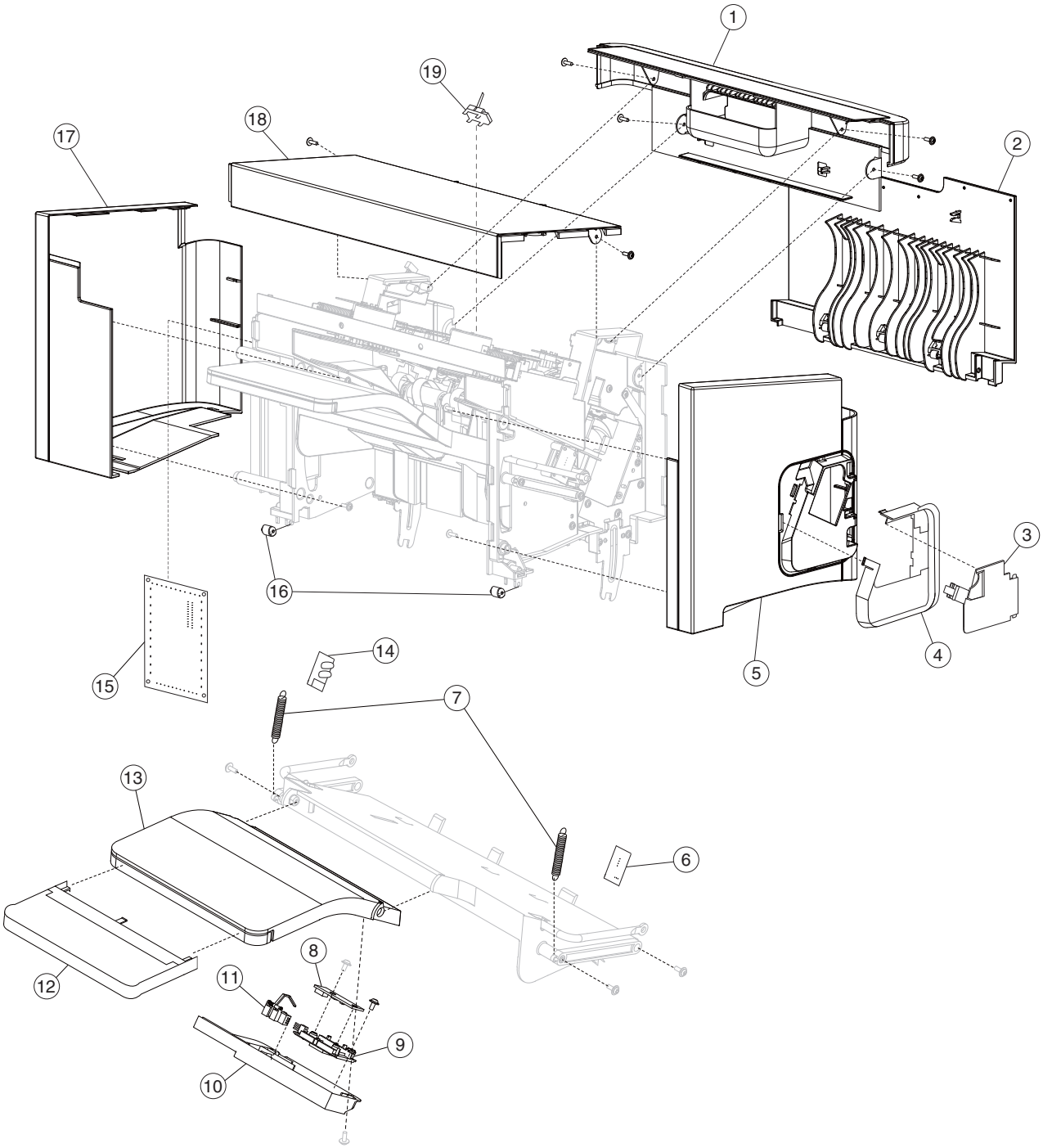

Assembly 20: MFP stapler assembly #2

Asm-index	P/N	Units/mach	Units/FRU	Description	Removal procedure
1	40X4612	1	1	Handle cover	--
2	40X4613	1	1	Rear door assembly	--
3	40X4730	1	1	Stapler cover	--
4	40X4764	1	1	Hollow cover	--
5	40X7466	1	1	Staple cartridge holder	--
6	40X4610	1	1	Right cover	--
7	40X5544	1	1	Sensor (bin full receive)	--
8	40X4617	1	2	Finisher bin spring	--
9	40X5545	1	1	Standard output bin LED	--
10	40X5727	1	1	LED clear lens	--
11	40X5720	1	1	LED sensor cover	--
12	40X4618	1	1	Sensor (finisher bin media present)	--
13	40X4619	1	1	Media output bin extension	--
14	40X5541	1	1	Media output bin	--
15	40X4626	1	1	Sensor (bin full send)	--
16	40X4625	1	1	Stapler/stacker controller card assembly	--
17	40X5751	1	1	Attach roller	--
18	40X4609	1	1	Left cover	--
19	40X4611	1	1	Top cover	--
20	40X5906	1	1	Sensor (stapler/stacker pass through)	--

Assembly 21: MFP stapler assembly #3

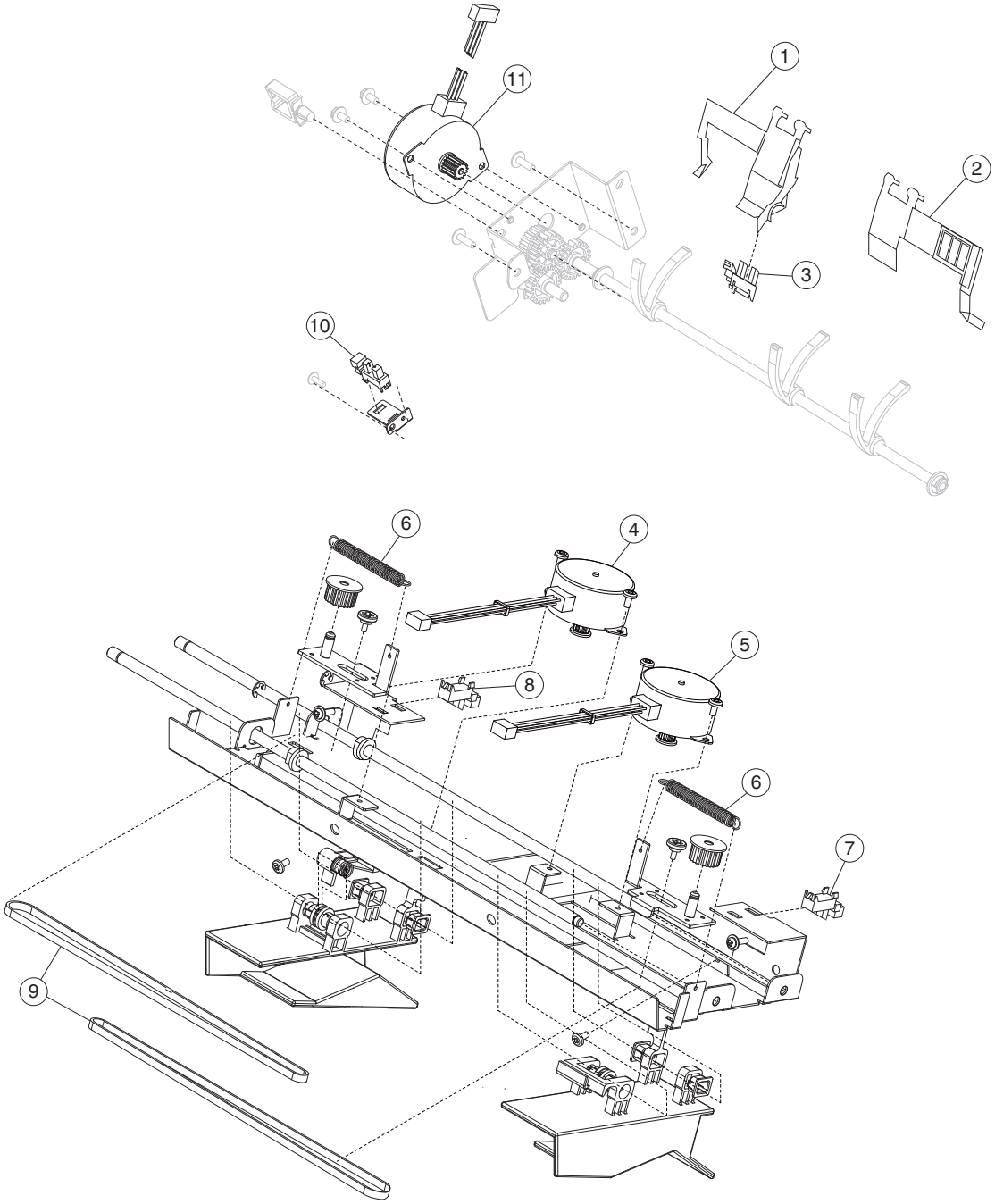

Assembly 21: MFP stapler assembly #3

Asm-index	P/N	Units/mach	Units/FRU	Description	Removal procedure
1	40X4645	1	1	Media stack flap actuator	--
2	40X4646	1	1	Media stack flap	--
3	40X4369	1	1	Sensor (media stack)	--
4	40X4621	1	1	Left tamper motor assembly	--
5	40X4622	1	1	Right tamper motor assembly	--
6	40X4624	1	2	Tamper recoil spring	--
7	40X4369	1	1	Sensor (tamper HP right)	--
8	40X4369	1	1	Sensor (tamper HP left)	--
9	40X4623	1	1	Tamper drive belt	--
10	40X4369	1	1	Sensor (paddle HP)	--
11	40X4615	1	1	Paddle drive motor	--

Assembly 22: MFP stapler assembly #4

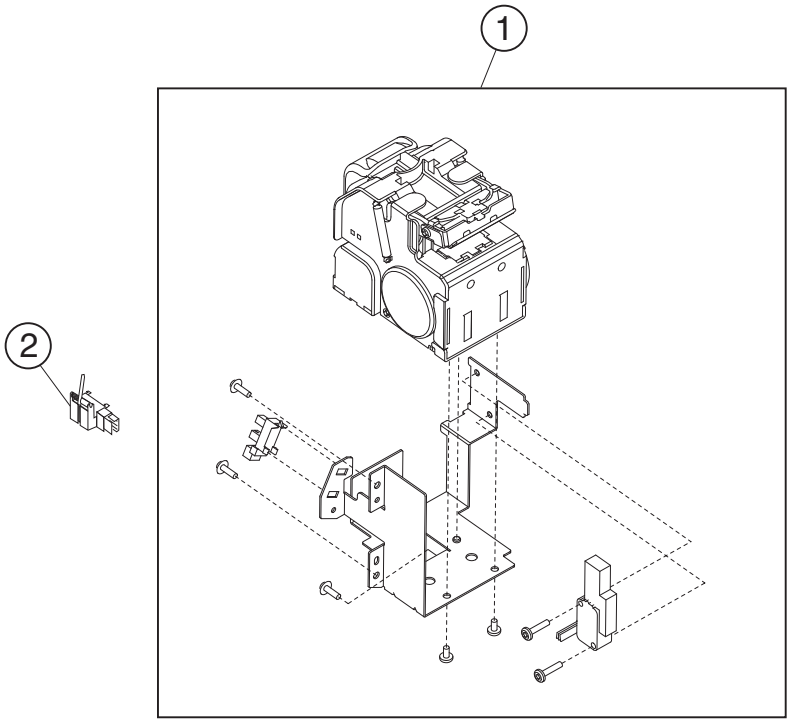

Assembly 22: MFP stapler assembly #4

Asm-index	P/N	Units/mach	Units/FRU	Description	Removal procedure
1	40X4641	1	1	Stapler assembly	--
2	40X5909	1	1	Sensor (media in stapler)	--

Assembly 23: MFP offset stacker assembly #1

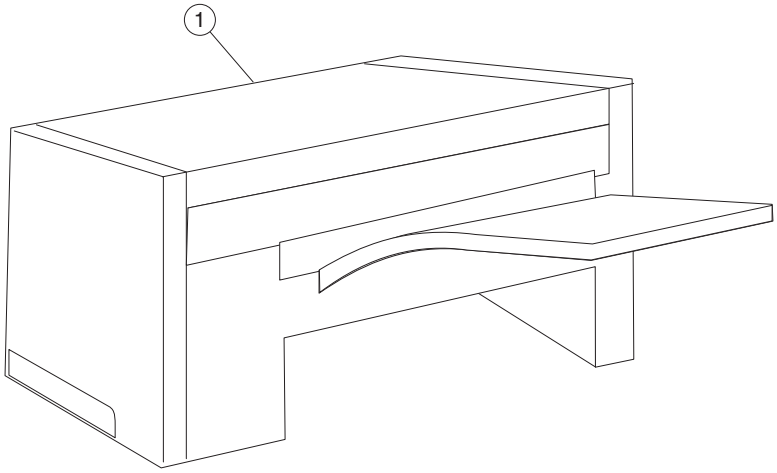

Assembly 23: MFP offset stacker assembly #1

Asm-index	P/N	Units/mach	Units/FRU	Description	Removal procedure
1	40X7025	1	1	MFP offset stacker assembly (comes completely assembled)	--

Assembly 24: MFP Offset stacker #2

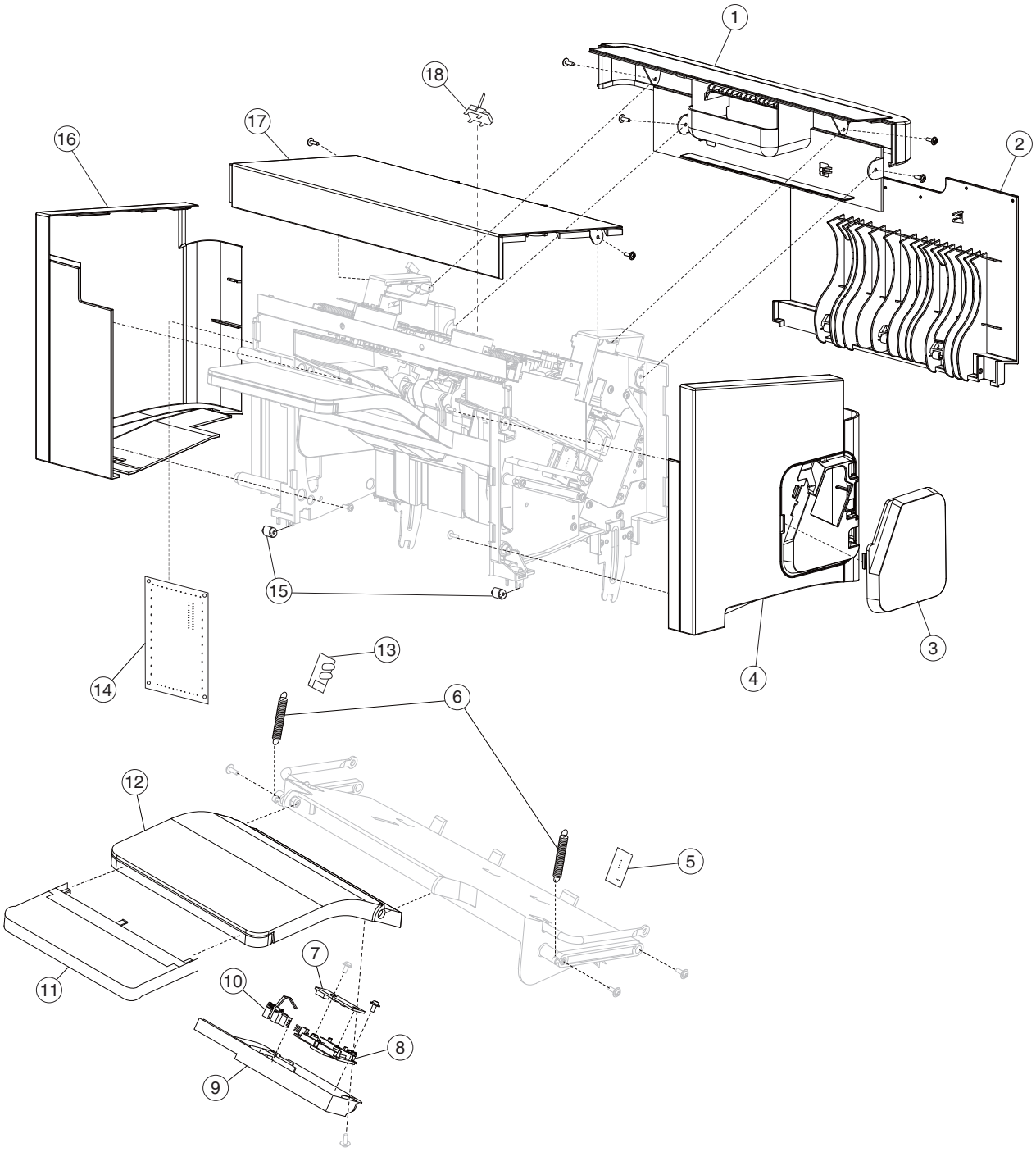

Assembly 24: MFP Offset stacker #2

Asm-index	P/N	Units/mach	Units/FRU	Description	Removal procedure
1	40X4612	1	1	Handle cover	--
2	40X4613	1	1	Rear door assembly	--
3	40X4730	1	1	Stapler cover	--
4	40X4610	1	1	Right cover	--
5	40X5544	1	1	Sensor (bin full receive)	--
6	40X4617	1	2	Finisher bin spring	--
7	40X5545	1	1	Standard output bin LED	--
8	40X5727	1	1	LED clear lens	--
9	40X5720	1	1	LED sensor cover	--
10	40X4618	1	1	Sensor (finisher bin media present)	--
11	40X4619	1	1	Media output bin extension	--
12	40X5541	1	1	Media output bin	--
13	40X4626	1	1	Sensor (bin full send)	--
14	40X4625	1	1	Stapler/stacker controller card assembly	--
15	40X5751	1	1	Attach roller	--
16	40X4609	1	1	Left cover	--
17	40X4611	1	1	Top cover	--
18	40X5906	1	1	Sensor (stapler/stacker pass through)	--

Assembly 25: MFP offset stacker #3

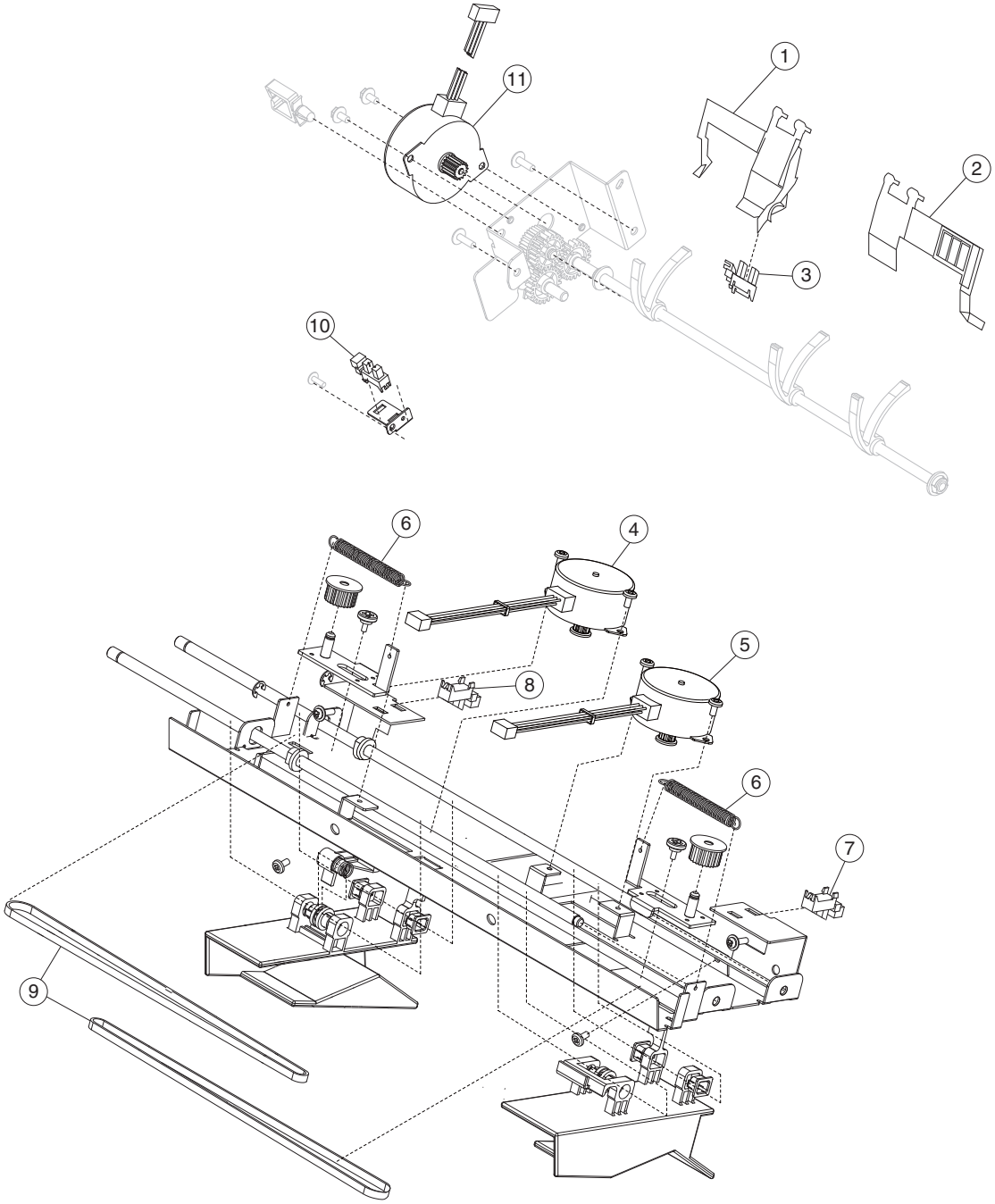

Assembly 25: MFP offset stacker #3

Asm-index	P/N	Units/mach	Units/FRU	Description	Removal procedure
1	40X4645	1	1	Media stack flap actuator	--
2	40X4646	1	1	Media stack flap	--
3	40X4369	1	1	Sensor (media stack)	--
4	40X4621	1	1	Left tamper motor assembly	--
5	40X4622	1	1	Right tamper motor assembly	--
6	40X4624	1	2	Tamper recoil spring	--
7	40X4369	1	1	Sensor (tamper HP right)	--
8	40X4369	1	1	Sensor (tamper HP left)	--
9	40X4623	1	1	Tamper drive belt	--
10	40X4369	1	1	Sensor (paddle HP)	--
11	40X4615	1	1	Paddle drive motor	--

Assembly 26: MFP 4-bin mailbox assembly #1

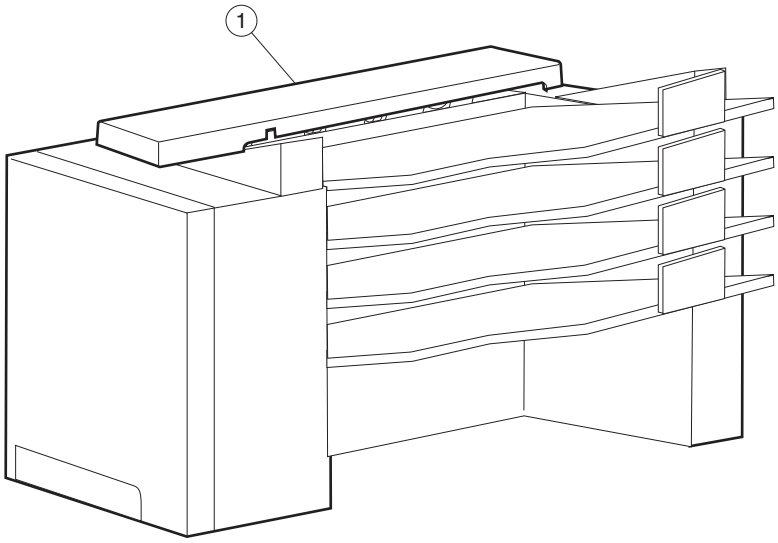

Assembly 26: MFP 4-bin mailbox assembly #1

Asm-index	P/N	Units/mach	Units/FRU	Description	Removal procedure
1	40X7024	1	1	MFP 4 bin mailbox assembly (comes completely assembled)	--

Assembly 27: MFP 4-bin mailbox assembly #2

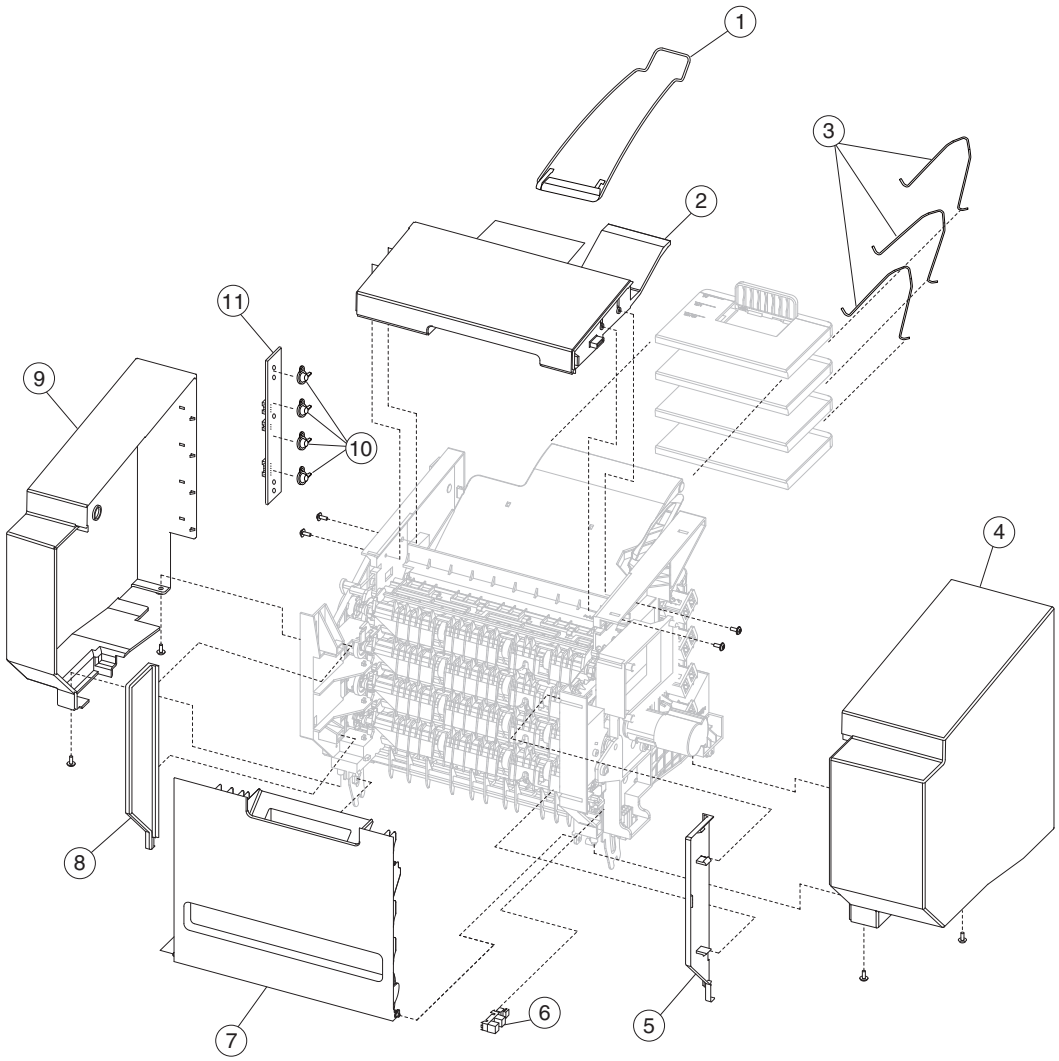

Assembly 27: MFP 4-bin mailbox assembly #2

Asm-index	P/N	Units/mach	Units/FRU	Description	Removal procedure
1	40X4644	1	1	Top media bin bail	--
2	40X4642	1	1	Top cover	--
3	40X4135	3	1	1st - 3rd media bail	--
4	40X4640	1	1	Left cover	--
5	40X4638	1	1	Left rear inner cover	--
6	40X4369	1	1	Sensor (deflector gate HP)	--
7	40X4632	1	1	Rear door assembly	--
8	40X4637	1	1	Right rear inner cover	--
9	40X4639	1	1	Right cover	--
10	40X4636	1	1	LED card assembly	--
11	40X4139	4	1	Media output bin light pipe	--

Assembly 28: MFP 4-bin mailbox assembly #3

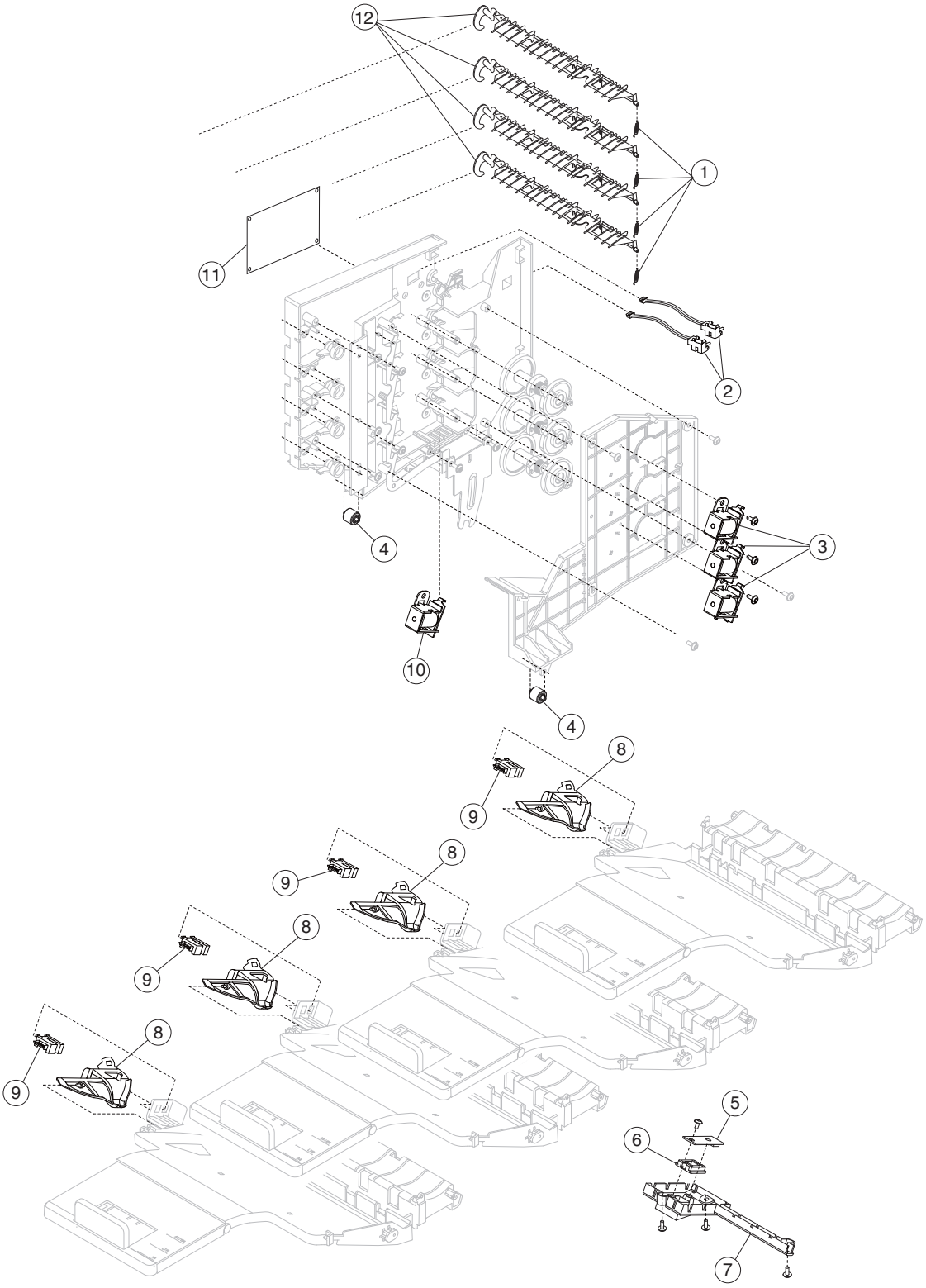

Assembly 28: MFP 4-bin mailbox assembly #3

Asm-index	P/N	Units/mach	Units/FRU	Description	Removal procedure
1	40X5750	4	1	Spring	--
2	40X5728	2	1	Sensor (pass through)	--
3	40X4635	3	1	Deflector gate solenoid	--
4	40X5751	1	1	Attach roller	--
5	40X5545	1	1	Standard output bin LED	--
6	40X5727	1	1	LED clear lens	--
7	40X4647	1	1	Output bin LED bracket	--
8	40X4136	4	1	Media bin full actuator	--
9	40X4633	4	1	Sensor (media bin full)	--
10	40X4643	1	1	Transport solenoid	--
11	40X4634	1	1	4 bin mailbox controller card assembly	--
12	40X4138	4	1	Media bin deflector	--

Assembly 29: Envelope feeder

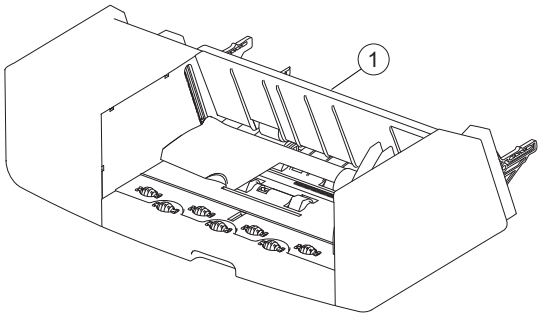

Assembly 29: Envelope feeder

Asm-index	P/N	Units/mach	Units/FRU	Description	Removal procedure
1	40X5739	1	1	Envelope feeder (X658 only)	--

Assembly 30: Miscellaneous

Asm-index	P/N	Units/mach	Units/FRU	Description	Removal procedure
NS	7372935	1	1	Relocation kit (X651, X652, and X654)	--
NS	7377730	1	1	Relocation kit (X658)	--
NS	40X4723	1	1	Printer maintenance kit (100 V type 1 fuser)	--
NS	40X4724	1	1	Printer maintenance kit (110 V type 1 fuser)	--
NS	40X4765	1	1	Printer maintenance kit (220 V type 1 fuser)	--
NS	40X4766	1	1	Printer maintenance kit (100 V type 2 fuser)	--
NS	40X4767	1	1	Printer maintenance kit (110 V type 2 fuser)	--
NS	40X4768	1	1	Printer maintenance kit (220 V type 2 fuser)	--
NS	40X4769	1	1	ADF maintenance kit	--
NS	40X5301	1	1	256 MB SO-DIMM	--
NS	40X5302	1	1	512MB SO-DIMM	--
NS	40X5303	1	1	1GB (1024MB) SO-DIMM	--
NS	40X5704	1	1	256MB user flash memory card	--
NS	40X5952	1	1	Lexmark PrintCryption card	--
NS	40X5969	1	1	Korean font card	--
NS	40X5970	1	1	Simplified Chinese font card	--
NS	40X5971	1	1	Traditional Chines font card	--
NS	40X5972	1	1	Japanese font card	--
NS	40X5953	1	1	Bar code/forms card	--
NS	40X5958	1	1	IPDS card (available w/EMEA, AP, LAD	--
NS	40X6200	1	1	Forms card with P269UBC code for UBOC	--
NS	40X1556	1	1	Parts pack, ISP thumbscrew and standoff	--
NS	40X5316	1	1	ISP interface cable assembly	--
NS	40X4826	1	1	MarkNet N8120 gigabit ethernet print server	--
NS	40X4827	1	1	MarkNet N8130 fiber ethernet print server	--
NS	40X5038	1	1	MarkNet N8150 802.11n wireless print server (US/Americas)	--
NS	40X5039	1	1	MarkNet N8150 802.11n wireless print server (WW, except US/Americas)	--
NS	56P2129	1	1	Lexmark N4000e print server	--
NS	56P2744	1	1	Lexmark N4050e (1 port USB) wireless 802.11g (US/Americas)	--

Asm-index	P/N	Units/mach	Units/FRU	Description	Removal procedure
NS	40X1593	1	1	Lexmark MarkNet N7002e (1 port parallel) ethernet 10baseT/100BaseTX	--
NS	40X1594	1	1	Lexmark MarkNet N7002e (1 port parallel) ethernet 10base T/100Base TX	--
NS	40X1592	1	1	Lexmark MarkNet N7020e (4 port USB) ethernet 10base T/100Base TX/1000BaseT	--
NS	40X4819	1	1	RS-232C serial interface card	--
NS	40X4823	1	1	Parallel 1284-B interface card	--
NS	40X1367	1	1	10-Foot parallel printer cable	--
NS	40X1368	1	1	2-Meter USB printer cable	--
NS	40X4821	1	1	MarkNet N8110-v.34 fax card	--
NS	40X5606	1	1	Fax interface card assembly	--
NS	40X2665	1	1	Fuser oil wiper (black housing)	--
NS	40X2666	1	1	Fuser wax wiper (gray housing)	--
NS	40X1462	1	1	Locking universal media drawer with tray, 200 sheet (excluding X658)	--
NS	40X1463	1	1	Locking media drawer with tray, 550 sheet (excluding X658)	--
NS	40X1464	1	1	Locking universal media drawer with tray, 400 sheet (excluding X658)	--

Assembly 31: Power cords

Asm-index	P/N	Units/mach	Units/FRU	Description	Removal procedure
NS	40X0269	1	1	Power cord LV, USA and Canada, Latin America	--
NS	40X0288	1	1	Power cord HV, Argentina	--
NS	40X0273	1	1	Power cord HV, Chile, Uruguay	--
NS	40X3141	1	1	Power cord HV, Albania, Austria, Belgium, Bosnia, Brazil, Bulgaria, Catalan, Czech Republic, Croatia, Egypt, Finland, France, Germany,Greece, Hungary, Iceland, Indonesia, Iran, Italy, Jordan, Lebanon, Lithuania, Luxembourg, Macedonia, Montenegro, Netherlands, Norway,Paraguay, Poland, Portugal, Romania, Russia, Serbia, Saudi Arabia (HV), Slovakia, Slovenia, Spain, Sweden, Syria, Turkey, Ukraine, US (HV),African Countries	--
NS	40X4596	1	1	Power cord LV, Brazil PPB kits	--
NS	40X0271	1	1	Power cord HV, United Kingdom, Asian, Brunei, Cambodia, Indonesia,Laos, Malaysia, Myanmar, Philippines, Singapore, Thailand, Vietnam, Afghanistan, Bangladesh, Bhutan, India, Nepal, Pakistan, Sri Lanka, Tibet, and Hong Kong	--
NS	40X0301	1	1	Power cord HV, Australia and New Zealand	--
NS	40X3609	1	1	Power cord 100 V, Japan	--
NS	40X1792	1	1	Power cord, HV, Korea	--
NS	40X0303	1	1	Power cord, HV PRC	--
NS	40X1791	1	1	Power cord LV, Taiwan	--
NS	40X1774	1	1	Power cord HV, Denmark, Finland, Norway, Sweden	--
NS	40X0275	1	1	Power cord, HV, Israel	--
NS	40X1773	1	1	Power cord HV, South Africa, Namibia, Lesotho, Botswana, and Pakistan	--
NS	40X1772	1	1	Power cord HV, Switzerland	--

Assembly 32: Universal trays and accessories

Asm-index	P/N	Units/mach	Units/FRU	Description	Removal procedure
NS	40X5857	1	1	Universal media drawer with tray, 200 sheet (X651, X652, X654, and X656)	--
NS	40X5858	1	1	Universal media tray, 200 sheet (X651, X652, X654, and X656)	--
NS	40X5859	1	1	Universal media drawer with tray, 400 sheet (X651, X652, X654, and X656)	--
NS	40X5860	1	1	Universal media tray, 400 sheet (X651, X652, X654, and X656)	--
NS	40X7001	1	1	Wear strips, smooth 250 sheet	--
NS	40X7002	1	1	Wear strips, dimpled 250 sheet	--
NS	99A1206	1	1	Wear strips, 3 row dimpled 250 sheet	--
NS	40X2786	1	1	Wear strips, 4 row dimpled 250 sheet	--
NS	40X7004	1	1	Wear strips, dinky 550 sheet	--
NS	40X2787	1	1	Wear strips, 3 row dimpled 550 sheet	--
NS	40X2788	1	1	Wear strips, 4 row dimpled 550 sheet	--
NS	40X7009	1	1	250 sheet tray replacement wear strip kit	--
NS	40X7010	1	1	550 sheet tray replacement wear strip kit	--
NS	40X0392	1	1	Klear screen wipe	--

Appendix A: Printer specifications

Power consumption

Product power consumption

The following table documents the power consumption characteristics of the product.

Note: Some models may not apply to your product.

Mode	Description	Power consumption (Watts)
Printing	The product is generating hard-copy output from electronic inputs.	700 W
Copying	The product is generating hard-copy output from hard-copy original documents.	765 W
Scanning	The product is scanning hard-copy documents.	165 W
Ready	The product is waiting for a print job.	95W
Power Saver	The product is in energy-saving mode.	21W, 24W, 26W
High Off	The product is plugged into a wall outlet, but the power switch is turned off.	N/A
Low Off (<1 W Off)	The product is plugged into a wall outlet, the power switch is turned off, and the product is in the lowest possible power consumption mode.	N/A
Off	The product is plugged into an electrical outlet, but the power switch is turned off.	110V = 0.15W, 220V = 1.25W

The power consumption levels listed in the previous table represent time-averaged measurements. Instantaneous power draws may be substantially higher than the average.

Values are subject to change. See **www.lexmark.com** for current values.

Power Saver

This product is designed with an energy-saving mode called Power Saver. The Power Saver Mode is equivalent to the EPA Sleep Mode. The Power Saver Mode saves energy by lowering power consumption during extended periods of inactivity. The Power Saver Mode is automatically engaged after this product is not used for a specified period of time, called the Power Saver Timeout.

Factory default Power Saver Timeout for this product (in minutes)—2110V = 45 minutes, 220V = 60 minutes

By using the configuration menus, the Power Saver Timeout can be modified between 1 minute and 240 minutes. Setting the Power Saver Timeout to a low value reduces energy consumption, but may increase the response time of the product. Setting the Power Saver Timeout to a high value maintains a fast response, but uses more energy.

Off mode

If this product has an off mode which still consumes a small amount of power, then to completely stop product power consumption, disconnect the power supply cord from the electrical outlet.

Total energy usage

It is sometimes helpful to calculate the total product energy usage. Since power consumption claims are provided in power units of Watts, the power consumption should be multiplied by the time the product spends in each mode in order to calculate energy usage. The total product energy usage is the sum of each mode's energy usage.

Noise emission levels

The following measurements were made in accordance with ISO 7779 and reported in conformance with ISO 9296.

Note: Some models may not apply to your product.

Mode	1-meter average sound pressure, dBA
Printing	56 dBA
Scanning	52 dBA
Copying	56 dBA
Ready	30 dBA

Values are subject to change. See **www.lexmark.com** for current values.

Temperature information

Ambient operating temperature	15.6C° – 32.2C°
Shipping and storage temperature	-40.0C° – 60.0C°

Appendix B: Options and features

Some of the following options are not available in every country or region.

Available internal options

- Memory cards
  - Printer memory
  - Flash memory
  - Fonts
- Firmware cards
  - Bar Code and Forms
  - IPDS and SCS/TNe
  - PrintCryption™
  - PRESCRIBE
- Printer hard disk
- Lexmark Internal Solutions Ports (ISP)
  - RS-232-C serial interface ISP
  - Parallel 1284-B interface ISP
  - MarkNet™ N8150 802.11 b/g/n Wireless ISP
  - MarkNet N8130 10/100 Fiber ISP
  - MarkNet N8120 10/100/1000 Thick Ethernet ISP
- MarkNet N8110 v.34 Fax Card

Media handling options

Some options may not be available for all models.

1	250- and 550-sheet paper trays of A4, letter, A5, B5, Executive, folio, statement, and legal size
2	250-sheet universally adjustable tray
3	250- and 550-sheet paper drawers
4	2000-sheet high-capacity feeder
5	Envelope feeder
6	Duplex option—250-sheet (external)
7	Duplex option—550-sheet (internal)
8	Output expander
9	High-capacity output stacker
10	StapleSmart Finisher
10	5-bin mailbox

10	Vertical kiosk presenter
10	Horizontal kiosk presenter
10	RFID UHF

Appendix C: Theory of operation

POR sequence

As the printer turns on, the engine code goes through a series of tests to verify hardware integrity. If a hardware failure is detected, then it is reported to the printer. If the POR sequence cannot be completed successfully, then the printer may post an error message. The message states that service may be needed.

Printer control

The printer uses a single processor for both RIP and engine functions. The raster image processor (RIP) code performs system responsibilities such as PC connection, LAN, ISP attachments, and bitmap generation. The engine code performs tasks related to the operation of the electrical and mechanical device systems such as motors, lasers, power supplies, and fusers. The NVRAMs are located on the controller board and control panel, replacement of either the controller board or control panel will pull or mirror NVRAM data from each other.

Printer theory

Models X651, X652, X654, and X656 paper path rolls and sensors

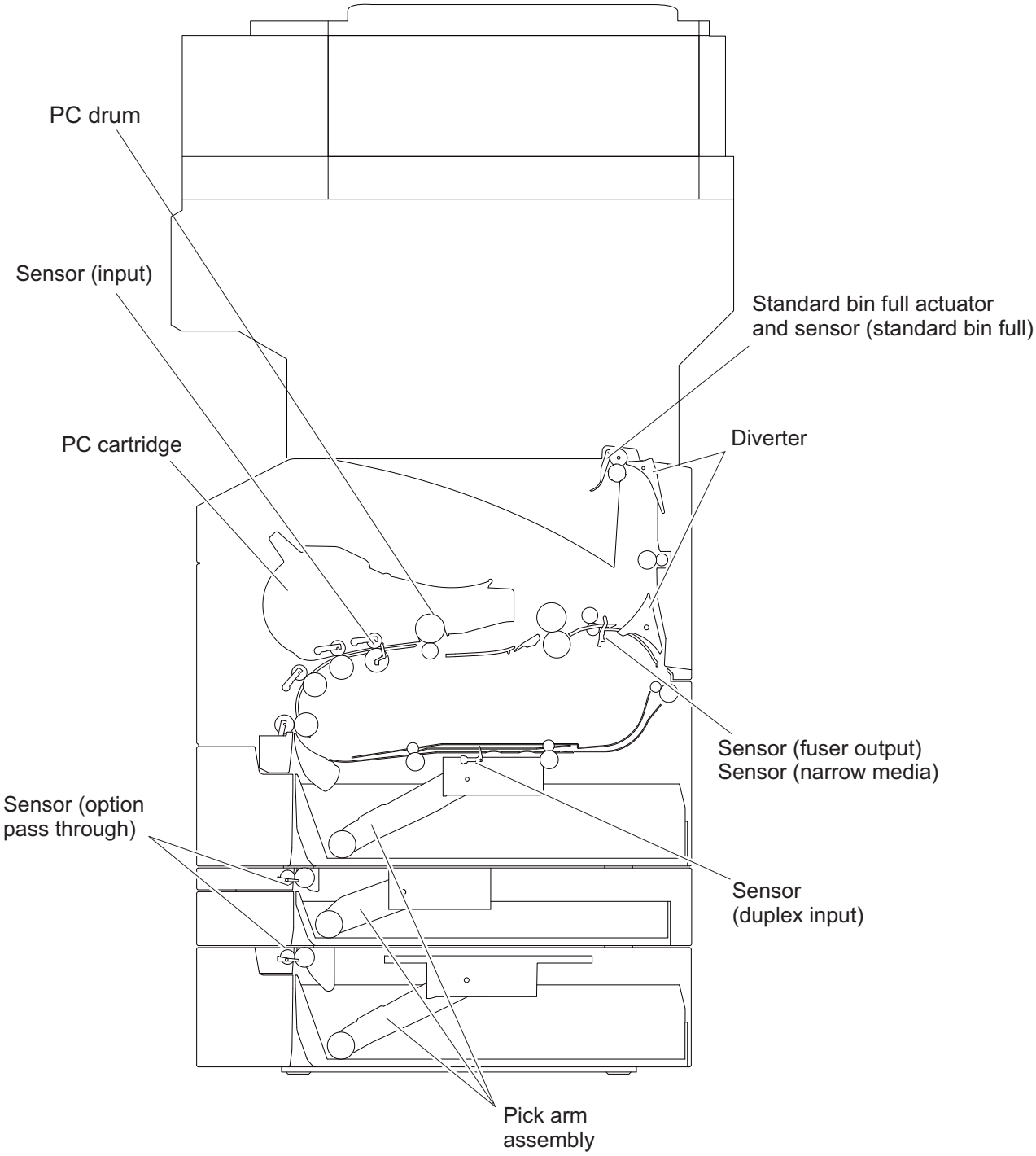

Model X658 paper path rolls and sensors

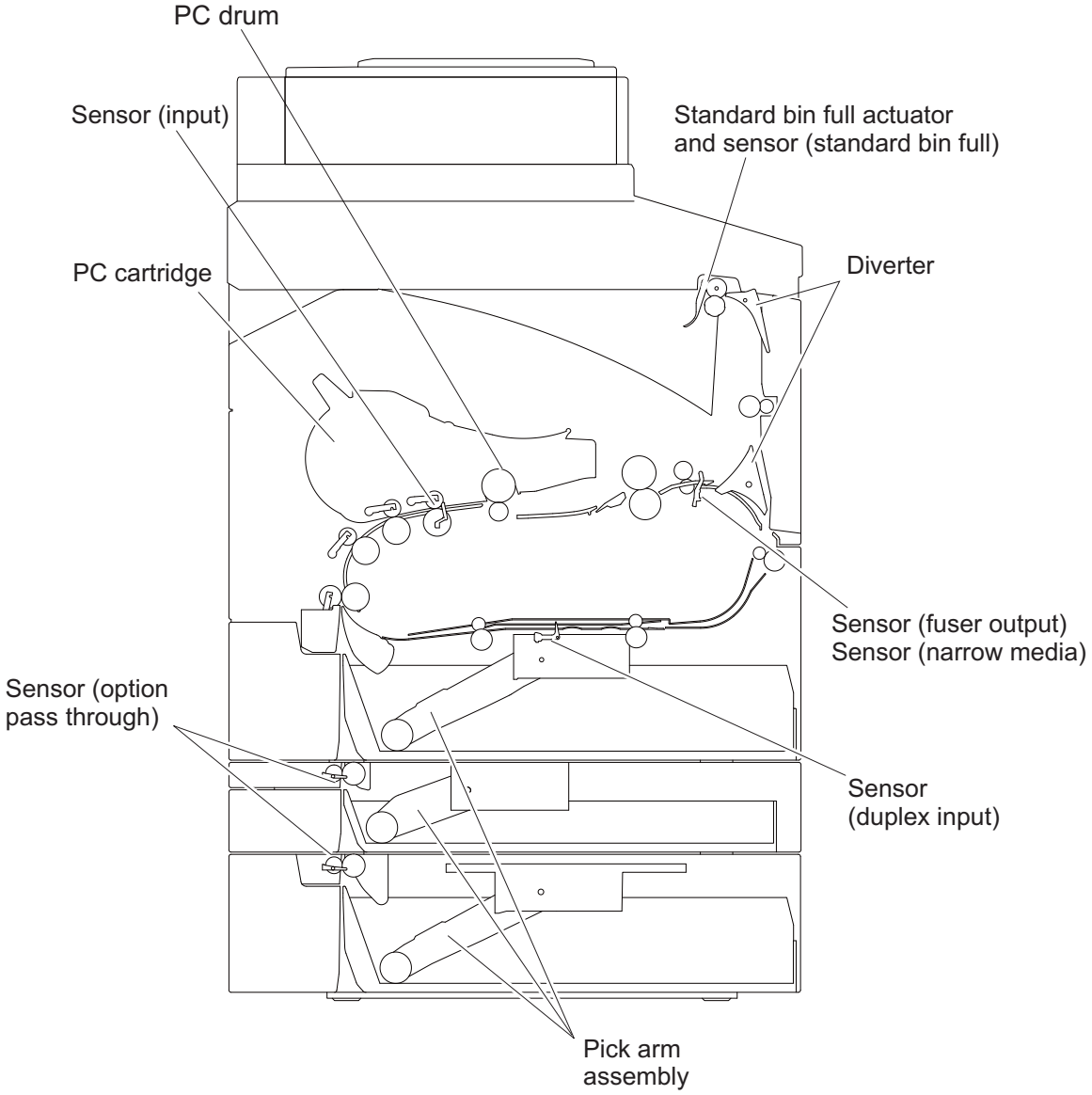

Functions of main components

- Media tray assembly
- Pick arm assembly (feed)
- MPF
- Xerographics
- Transfer
- Fuser
- Drive
- Electrical components and rolls

Media tray assembly

It is necessary to adjust the media tray rear guide and media tray side guide of the media tray assembly to match the media size.

Rear media guide

The rear media tray guide assembly can be adjusted to different media sizes by moving it to the front or rear. The rear guide should come into contact with the media and hold it in position.

Side guide

The media tray assembly is designed so it can adapt to the media width in the media feed direction by moving the side guide to the left or right.

Wear strips

The wear strips are designed to provide a fixed resistance to ensure that a single piece of paper is properly fed out of the media tray. There are several types of wear strips available for custom or hard to feed media.

Media tray assembly

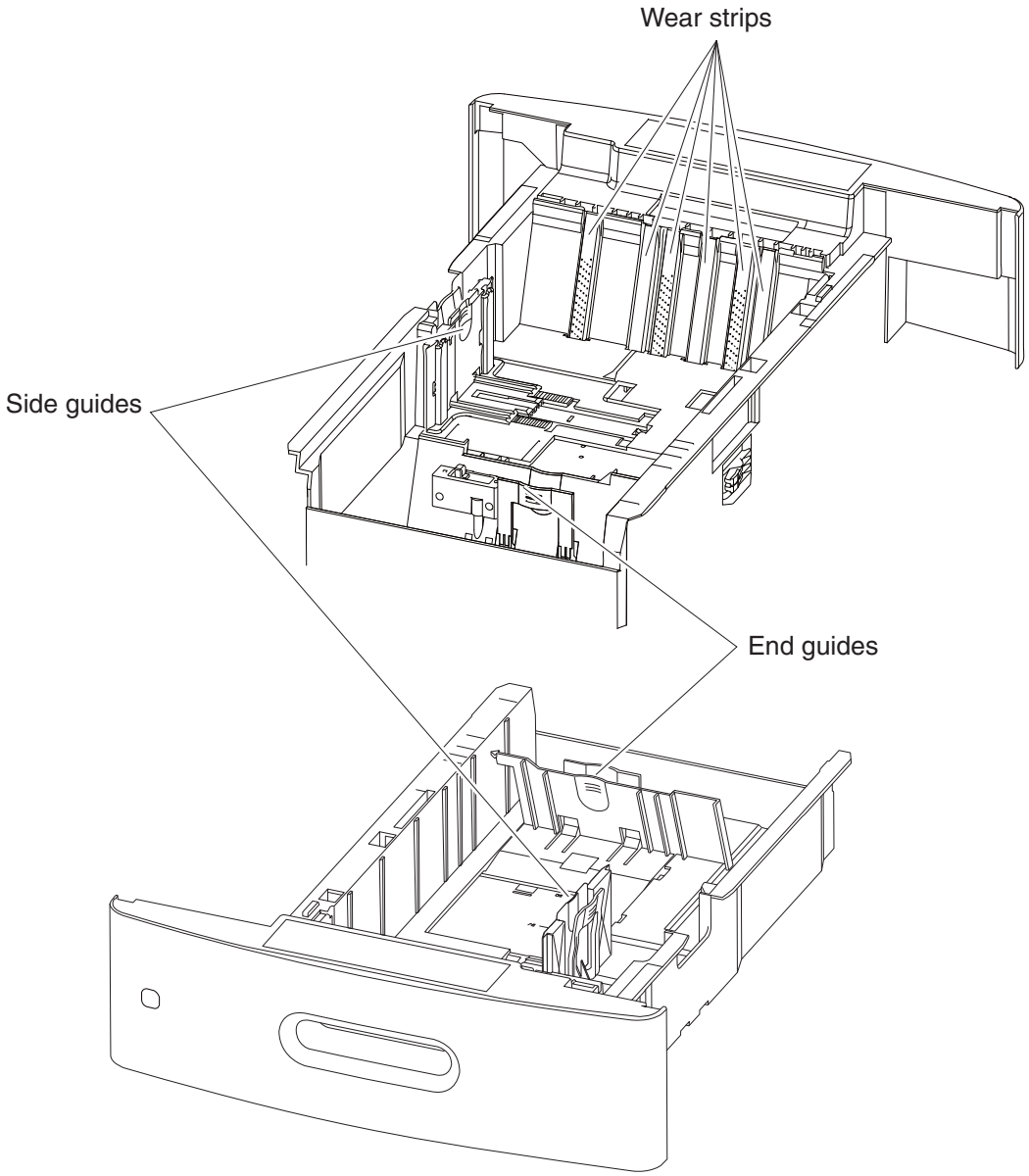

Detection of media size

The media size set for the media tray assembly is transmitted to the switch (media size) by moving these guides. The media size is detected by the on/off information of these switches.

Pick arm assembly

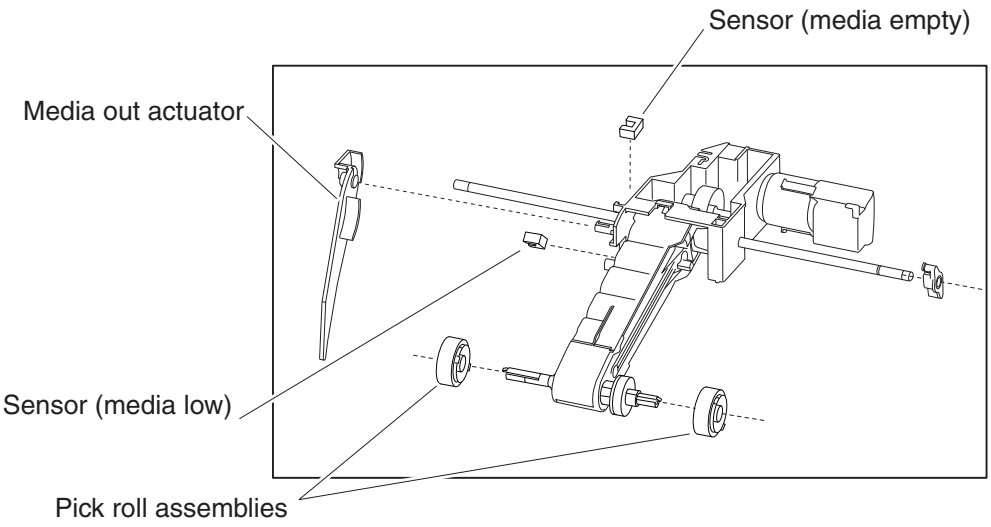

Since all media trays are functionally equivalent in terms of the switch (media size), sensor (media empty), sensor (media low), only the components of one tray are described here.

The pick arm assembly is a mechanical unit supplying media from the media tray assembly to the printer. The driving force, from the pick arm drive motor on the pick arm assembly, is transmitted to the two pick rolls to feed media.

When the pick rolls pick up media, the remaining media decreases, and the media out actuator will lower and interact with the sensor (media low) and sensor (media empty) to determine the amount of media remaining.

The pick arm assembly (autocompensator) is a paper pick device that generates its own normal force. This force generation is inherent in the fundamental design of the pick arm. If light media is used, it picks very gently. If a heavy media is used, it picks very aggressively. No customer adjustments are necessary, therefore no special trays are needed for card stock or labels. The gearing in the arm is designed so the input torque from the motor produces a movement about the pivot of the arm. This movement produces a downward force at the pick rolls. The friction between the pick roll and the paper produces a frictional locking condition. If the paper is physically held and not allowed to feed, then the motor stalls. Slippage between the roll and the paper is theoretically impossible. When the motor is energized, the pick rolls are driven down into the stack, increasing the normal force and drive force until the bending strength of the paper is overcome and the paper bends and moves up the wear strip.

Switch (media size)

This switch (media size) sets the size of media supplied from each media tray assembly. A signal indicating the media size is transmitted as a voltage to the printer system card assembly.

Sensor (media empty)

If media runs out in a media tray assembly, the actuator lowers and the actuator flag, unlocks the sensing area of the sensor (media empty). The sensor light is transmitted. When the sensing area is blocked (media is present), the signal is off.

Sensor (media low)

This sensor detects by the actuator position whether media in the media tray assembly is low. When the flag of the actuator blocks, then unblocks the sensing area of the sensor (media low), the media level is determined to be low.

MPF

The MPF is a mechanical unit supplying media to the printer. The driving force from the main drive motor drive motor is transmitted to the MPF pick roll to feed media.

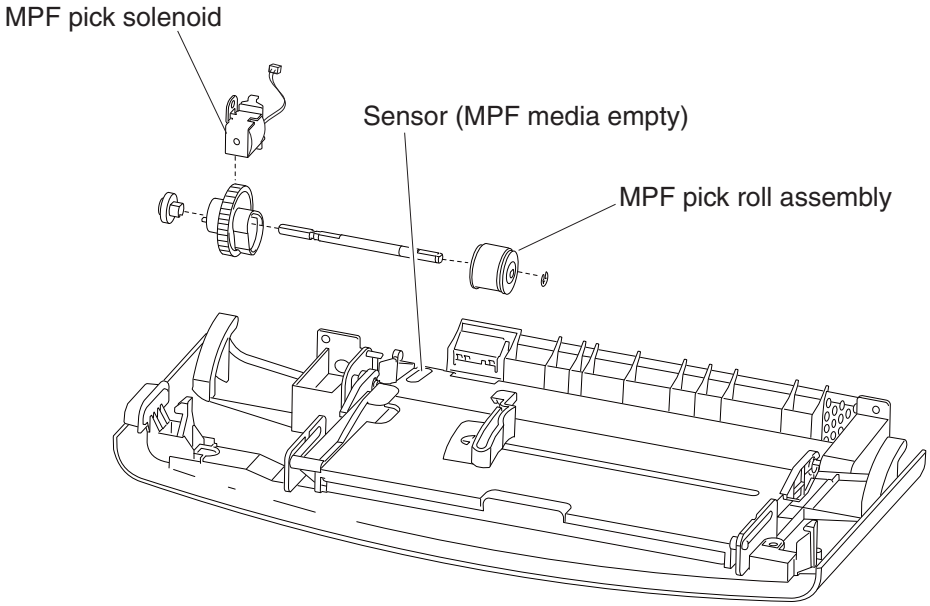

#	Part
1	MPF pick solenoid
2	Sensor (MPF media empty)
3	MPF pick roll assembly

MPF feed roll

The MPF pick roll feeds the media set on the MPF into the printer.

MPF pick solenoid

The MPF pick solenoid transmits the driving force from the main drive motor assembly to the MPF pick roll.

Sensor (MPF media empty)

The sensor (MPF media out) detects whether media is present on the MPF.

Registration

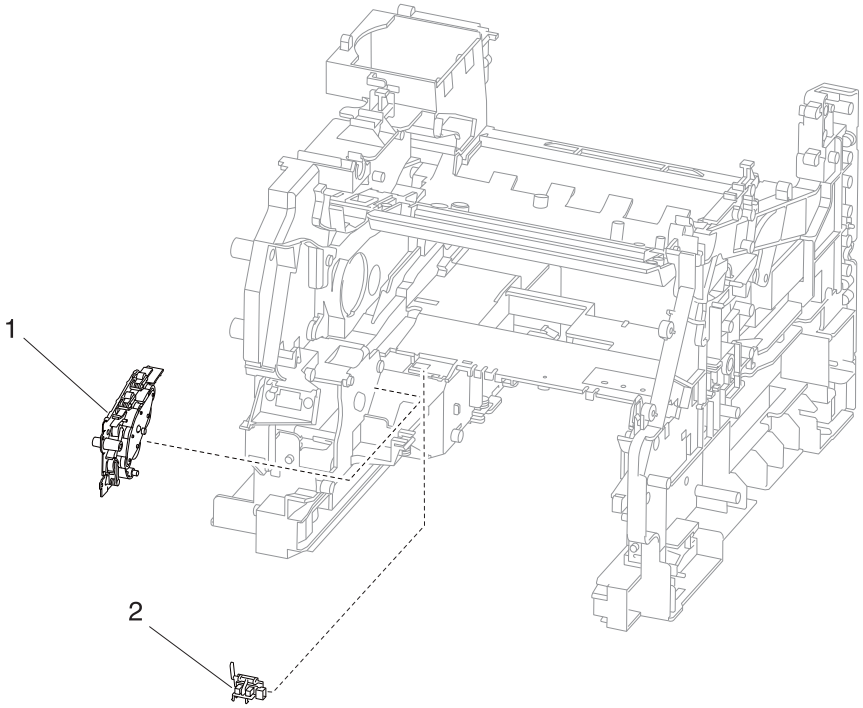

#	Part
1	Aligner assembly
2	Sensor (input)

Sensor (input)

The sensor (input) is located just before the print cartridge and can detect whether media exists in the input path.

Aligner assembly

The aligner assembly is used to feed the media through the input path and to ensure that media is fed through the machine in a perfectly straight manner and not in a skewed manner. The aligner assembly can be adjusted to correct media skew issues and should always be adjusted when it is replaced.

Transfer

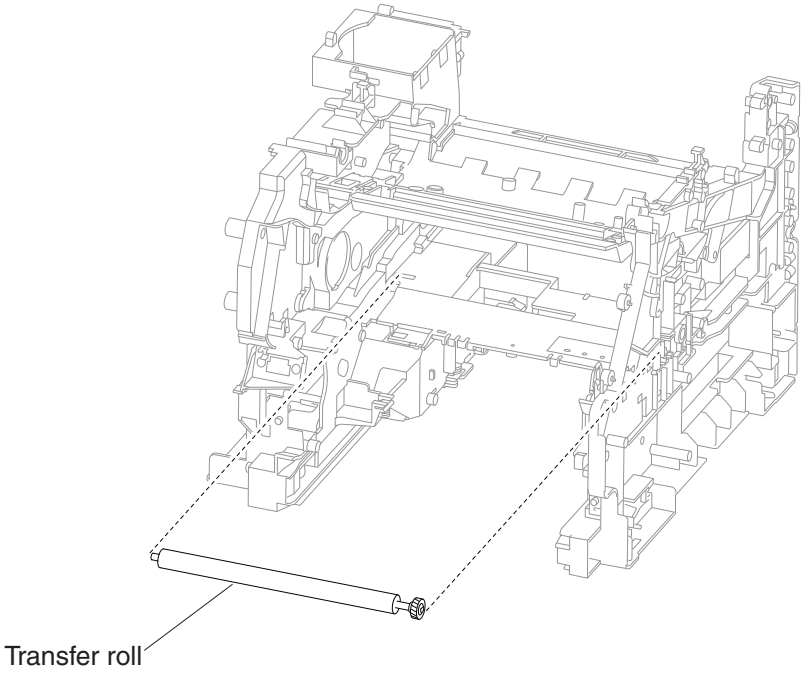

Transfer roll assembly

The transfer roll assembly applies charge to the rear surface of the media when the media passes between the transfer roll assembly and photo conductor (drum). Thus, the toner image is transferred from the photo conductor (drum) surface to the media surface.

Polygon printhead assembly

The printhead scans the photo conductor drum surface with a laser beam. It consists of four components: laser diode (LD) card assembly, printhead motor, polygon mirror, and the start of scan card assembly.

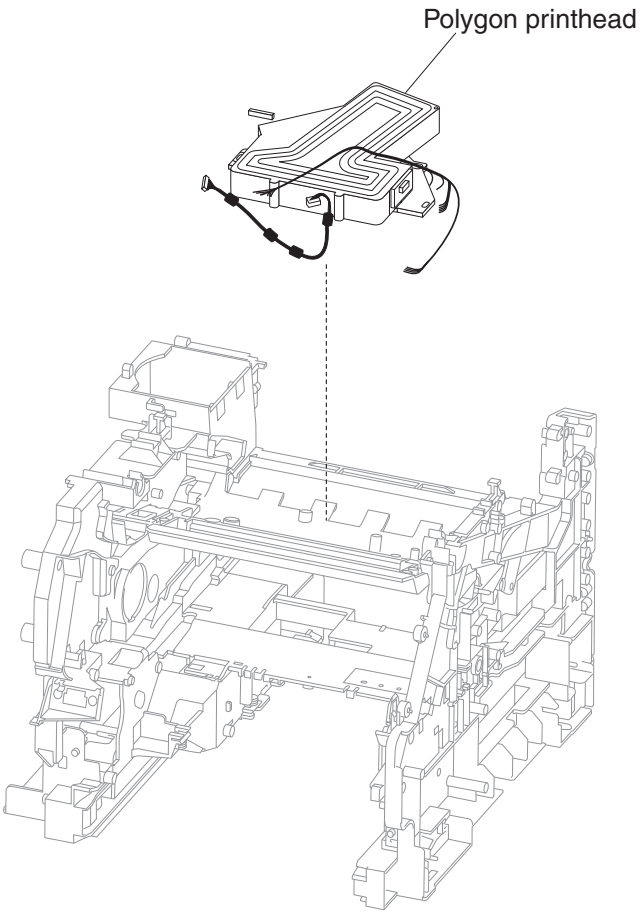

#	Part
1	Polygon printhead

1 LD card assembly — This generates the laser beam. The beam is turned on or off according to a print data signal coming from the system card.

2 Printhead motor/polygon mirror — The polygon mirror is mounted to the shaft of the printhead motor, and is rotated at a high speed by the printhead motor. The mirror rotation shifts the incidence and reflection angles of a laser beam to scan the photoconductor (drum) in a single direction. The laser beam reaches the polygon mirror as it passes through multiple lenses, mirrors, and windows. The laser beam then arrives at the photo conductor (drum) surface.

3 SOS card assembly —When a laser beam hits the SOS sensor on the SOS card assembly, the beam is converted to an electrical signal (SOS signal), and detects the initial position where a scan starts on each line.

When a laser beam is scanned across the photoconductor (drum) surface from one end to the other while turning on and off the beam, one line of latent image is created. If the scanning by the laser beam is repeated while rotating the drum, a two-dimensional image is created. The resolution in the scanning direction (from right to left) is determined by the rotational speed of the printhead motor, depending on how quickly the laser is adjusted. The resolution in the process direction (from top to bottom) is determined by the rotational speed of the printhead motor. (The higher the scanning speed becomes, the sooner the scanning of the next row can be started.)

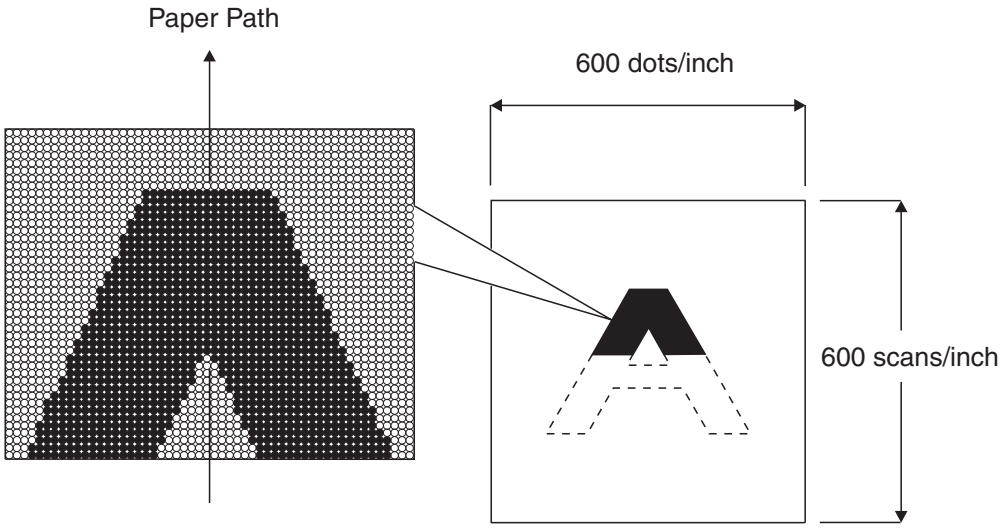

Fuser

The printhead scans the photo conductor drum surface with a laser beam. It consists of four components: laser diode (LD) card assembly, printhead motor, polygon mirror, and the start of scan card assembly.

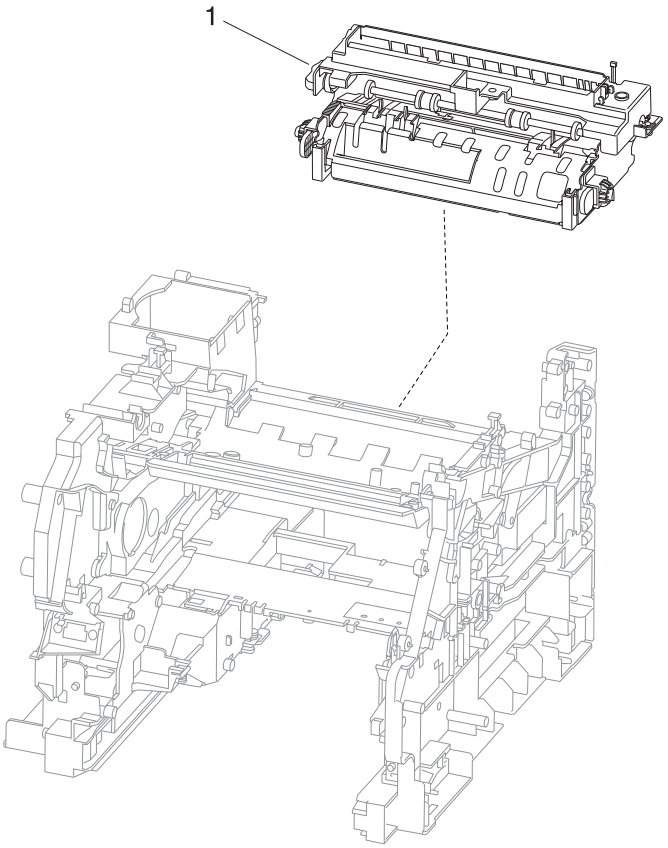

#	Part
1	Fuser unit assembly

Fuser components

The printhead scans the photo conductor drum surface with a laser beam. It consists of four components: laser diode (LD) card assembly, printhead motor, polygon mirror, and the start of scan card assembly.

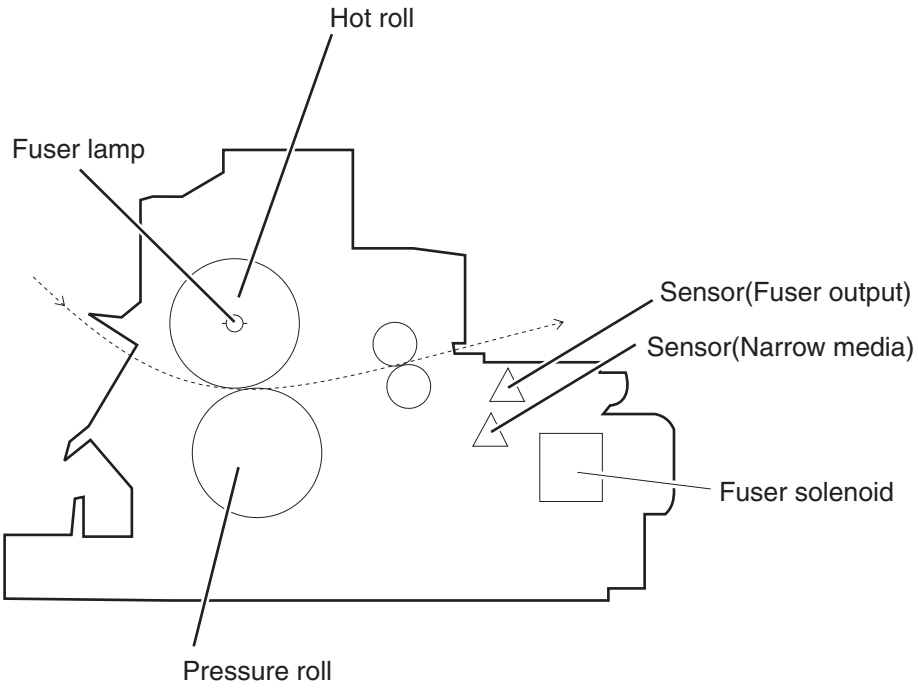

#	Part
1	Fuser unit assembly
2	Sensor (fuser output)
3	Sensor (narrow media)
4	Fuser solenoid
5	Pressure roll
6	Fuser lamp

Heat roll

The heat roll is a hollow metal tube with a coated surface. This tube is heated by the inner heater lamp. The heat is applied to the media passing between the heat roll and pressure roll, fusing the toner on the media.

Pressure roll

The pressure roll is used to apply pressure to the media surface for fusing. Pressure is applied to the media between the pressure roll and heat roll, pressing the melted toner against the media.

Heater lamp

The heater lamp is a quartz glass tube containing a heater coil. A terminal is mounted to the end of the heater rod via a harness.

Thermal cutoff

If the heat roll temperature exceeds the preset temperature, the thermal cutoff cuts off the circuits of the main heater lamp and sub heater lamp.

Thermistor

The thermistor monitors the surface temperature of the media-feed portion of the heat roll to control on/off of the main heater lamp and sub heater lamp.

Sensor (fuser output)

The sensor (fuser output) detects the arrival of media at the detection point in the exit area of the fuser, and also detects the ejection of media from this point.

Sensor (narrow media)

The sensor (narrow media) detects the arrival of narrow media at the detection point in the exit area of the fuser, and also detects the ejection of media from this point. It is used to make adjustments to ensure that narrow media is properly fused.

Fuser unit assembly (types 1 and 2)

Type 1 fuser unit assembly

In the type 1 fuser unit assembly, the detacs, which are used to prevent the media from sticking to the hot roll, do not make contact with the hot roller. The type 1 fuser unit assembly has a life of 300K.

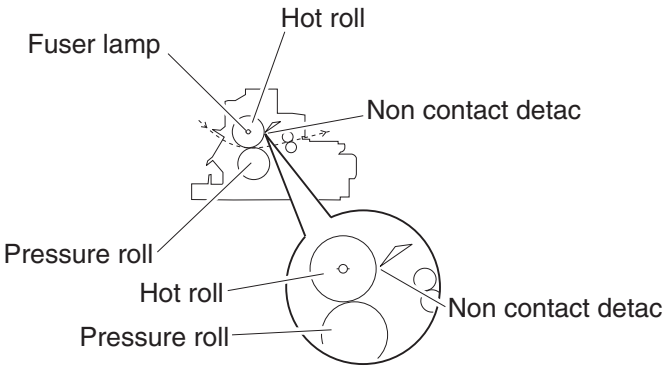

#	Part
1	Hot roll
2	Non contact detac
3	Non contact detac
4	Pressure roll
5	Hot roll
6	Pressure roll
7	Fuser lamp

Type 2 fuser unit assembly

In the type 2 fuser unit assembly, the detacs, which are used to prevent the media from sticking to the hot roll, make contact with the hot roller. The type 2 fuser unit assembly has a life of 150K.

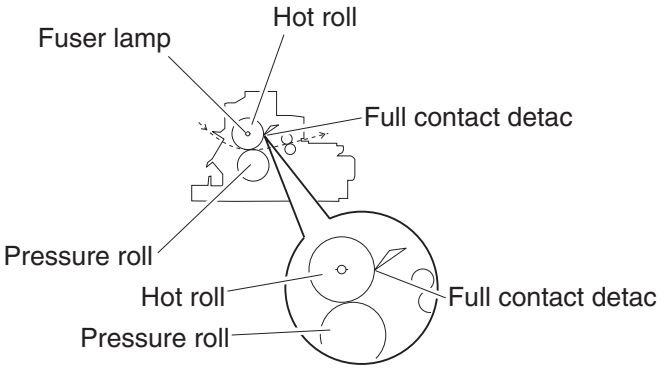

#	Part
1	Hot roll
2	Full detac
3	Full detac
4	Pressure roll
5	Hot roll
6	Pressure roll
7	Fuser lamp

Exit

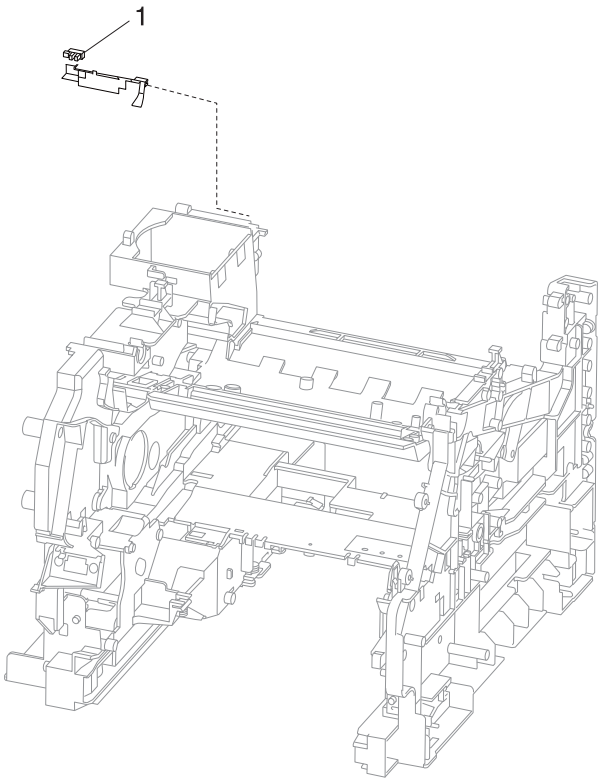

#	Part
1	Sensor (standard bin exit)

Sensor (standard bin full)

The sensor (standard bin full) detects whether the standard bin is full by moving the actuator up and down.

Drive

Main drive motor assembly

The main drive motor is a DC motor that drives the print cartridge, aligner, MFP, and fuser.

Redrive motor assembly

The redrive motor assembly is a DC motor that drives the redrive assembly that transports the media into the standard bin or output option.

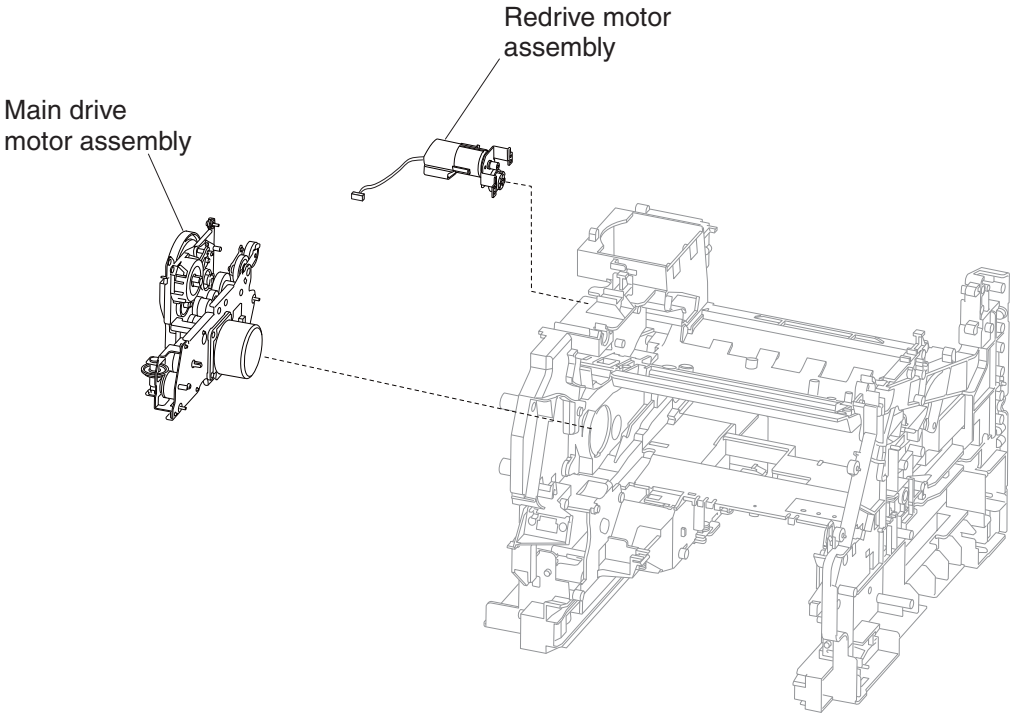

#	Part
1	Main drive motor assembly
2	Redrive motor assembly

Electrical components and controller

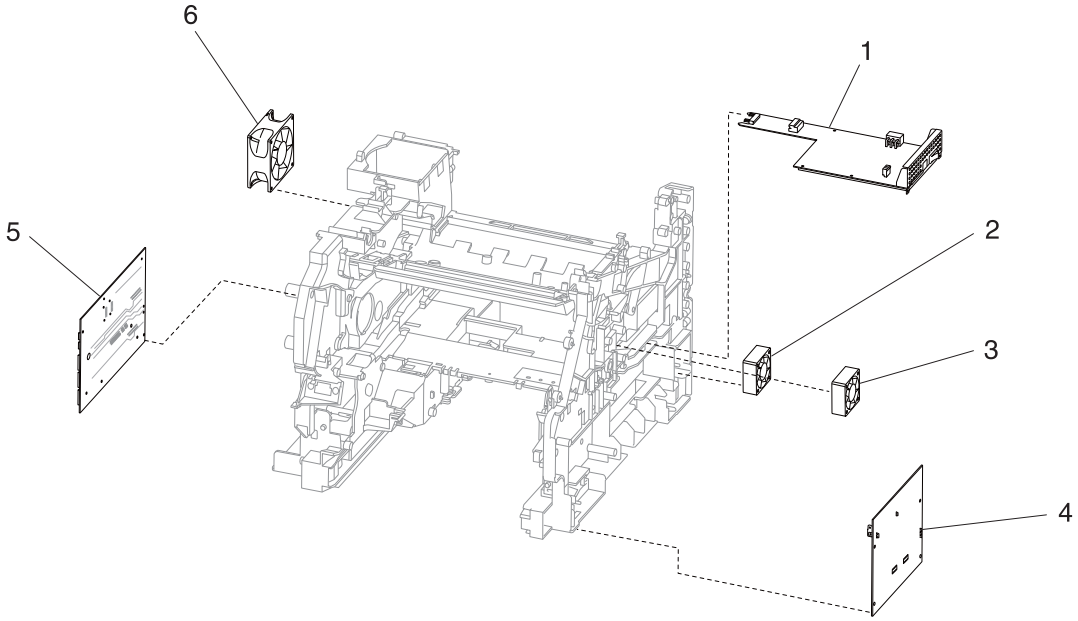

#	Part
1	LVPS card assembly
2	Duplex cooling fan
3	Print cartridge cooling fan
4	HVPS card assembly
5	System card assembly
6	Main cooling fan

Switch (printer front door interlock)

The switch is a safety switch to cut off a 24 VDC power supply from the LVPS card assembly to the high volt power supply (HVPS) card assembly, printer system card assembly and to the main drive motor assembly, while the printer front door assembly is open.

Main cooling fan

The main cooling fan discharges air from the printer to prevent excessive temperature increase.

Print cartridge cooling fan

The print cartridge cooling fan discharges air from the print cartridge area to prevent excessive temperature increase.

Duplex cooling fan

The duplex cooling fan discharges air from the duplex drive motor area to prevent excessive temperature increase.

LVPS card assembly

The LVPS card assembly generates low voltages 5V for logic circuits, 5V for laser diodes, and 24V for cooling fans. The LVPS is switchable and can be switched to work with 100V, 110V, and 220V machines.

LVPS cooling fan

The LVPS cooling fan discharges air from the LVPS to prevent excessive temperature increases.

HVPS card assembly

The HVPS card assembly generates AC power and feeds it to the developer roll, the transfer roll assembly, and the charge roll assembly.

System card assembly

The system card assembly controls printing operation based on the communication with the RIP controller and optional peripherals. It also controls toner dispense, fuser control, sensor switch feedback, drive motors, clutches, and solenoids.

Printhead control

Rotation of printhead motor

The on/off control of the printhead motor is performed according to the mode of operation as shown below.

Operation mode	Printhead motor on/off
Standby mode	Always off
Print mode	Turns on upon receiving the signal from the controller, and turns off after a preset time has passed from the end of printing. Also turns off if a print command is not received within 30 seconds from the reception of the signal.
Sleep mode	Always off

Determination of printhead ready

The printhead goes into ready state after the specified period passes since the reception of the printhead MPA start signal and the SOS cycle exceeds the reference value.

Printhead reference value

Printhead reference value	Description
Ready reference value	SOS signal interval (equivalent to 98% or more of the rated RPM of the printhead motor)
Fail reference value	SOS signal interval (less to 98% or more of the rated RPM of the printhead motor)

Fuser control

Fuser control method

The on/off control of the main/sub heater lamps is performed based on the fuser control temperature. The fuser transmits between the five states (warm up, ready, standby, print, and low power) depending on the heat roll surface temperature or printer conditions.

The fuser temperature control starts when the fuser ready in the system card assembly is turned on after a preset time period has passed from power on. If a failure occurs, the heater lamps are turned off, the fuser ready is turned off, and then the fuser temperature control is stopped.

Fuser lamp on/off control

The thermistor detects the heat roll surface temperature (fuser temperature) to regulate the temperature at the target control temperature by turning on or off the heater lamp.

Fuser warm-up

The fuser warm-up starts at the time of power on, interlock open or close, jam reset, or return from the low power mode, and ends when the ready temperature is attained, when a failure occurs, or when executing diagnosis.

Xerographic and print cartridge components

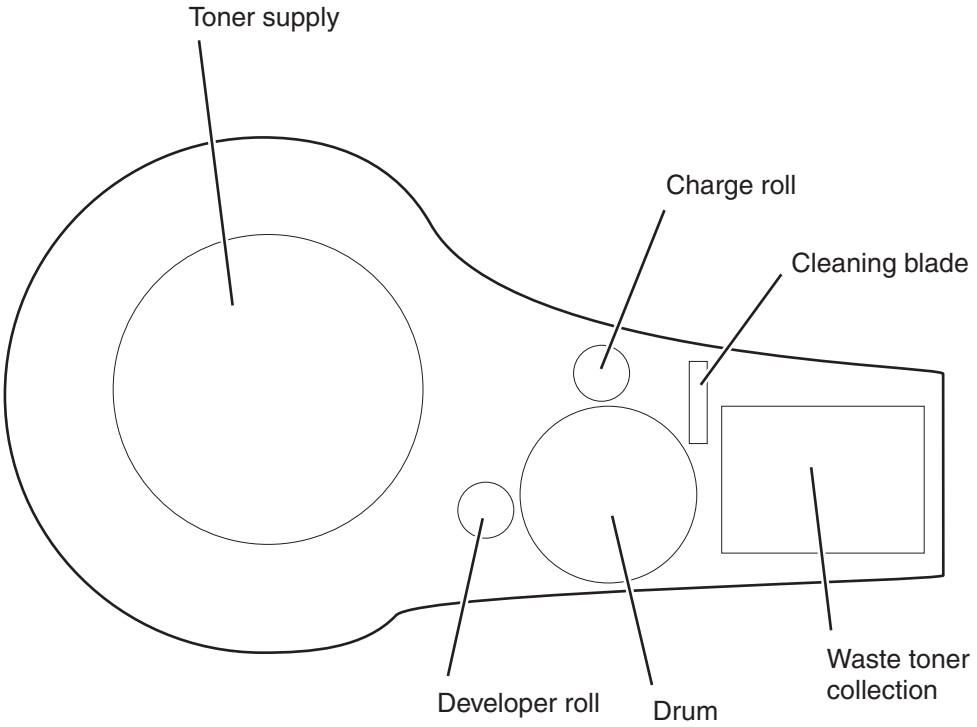

#	Part
1	Toner supply
2	Charge roll
3	Cleaning blade

#	Part
4	Waste toner collection
5	Drum
6	Developer roll

Charge

The charge roll places a uniform negative electrostatic charge on the surface of the drum. The drum surface is made of a photoconductive material that holds an electrical charge as long as the drum remains in darkness. Light striking the drum discharges the surface charge.

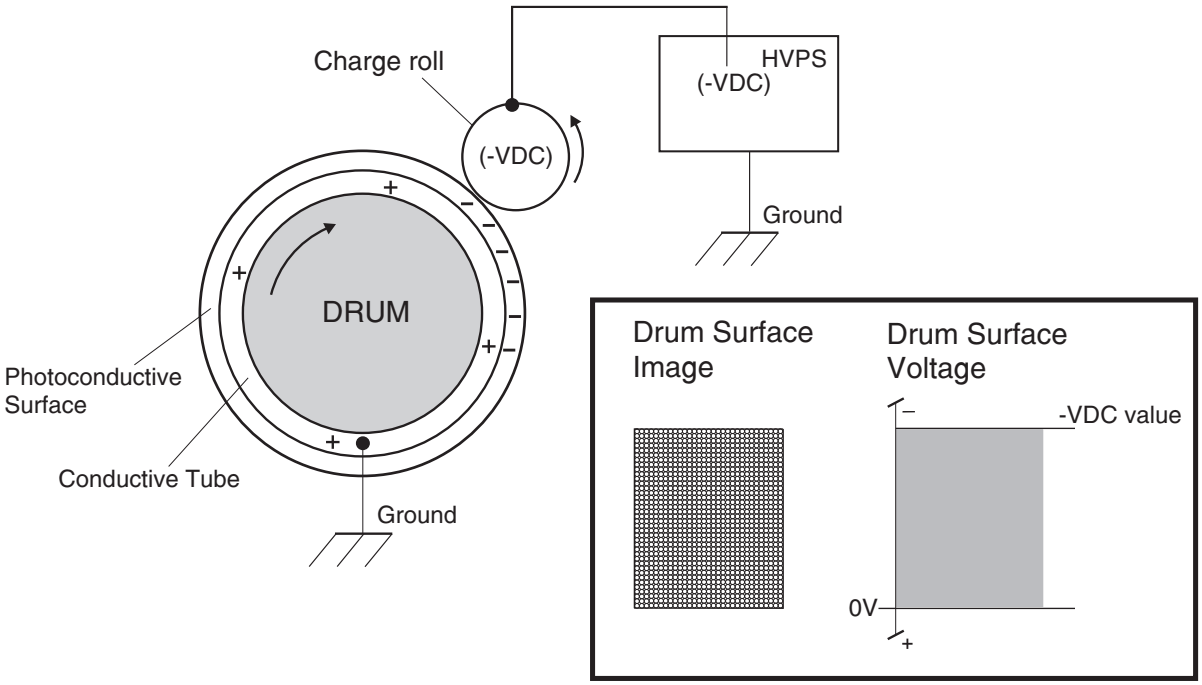

Exposure

The printhead generates a beam of laser light. Image data received from the system card assembly modulates this beam, turning it on and off according to image information that is received from the host computer and software.

Through the use of a series of rotating and stationary mirrors within the printhead, the beam scans the negatively charged drum surface. Whenever the print controller sends a command to print a black pixel, the laser switches on long enough to shine onto the drum at a single pixel point. That point is now discharged and slightly less negative than the surrounding negative charge. The less negative areas are considered positive.

This discharge/no discharge process creates an invisible, electrostatic image on the surface of the drum. This image is called a latent image.

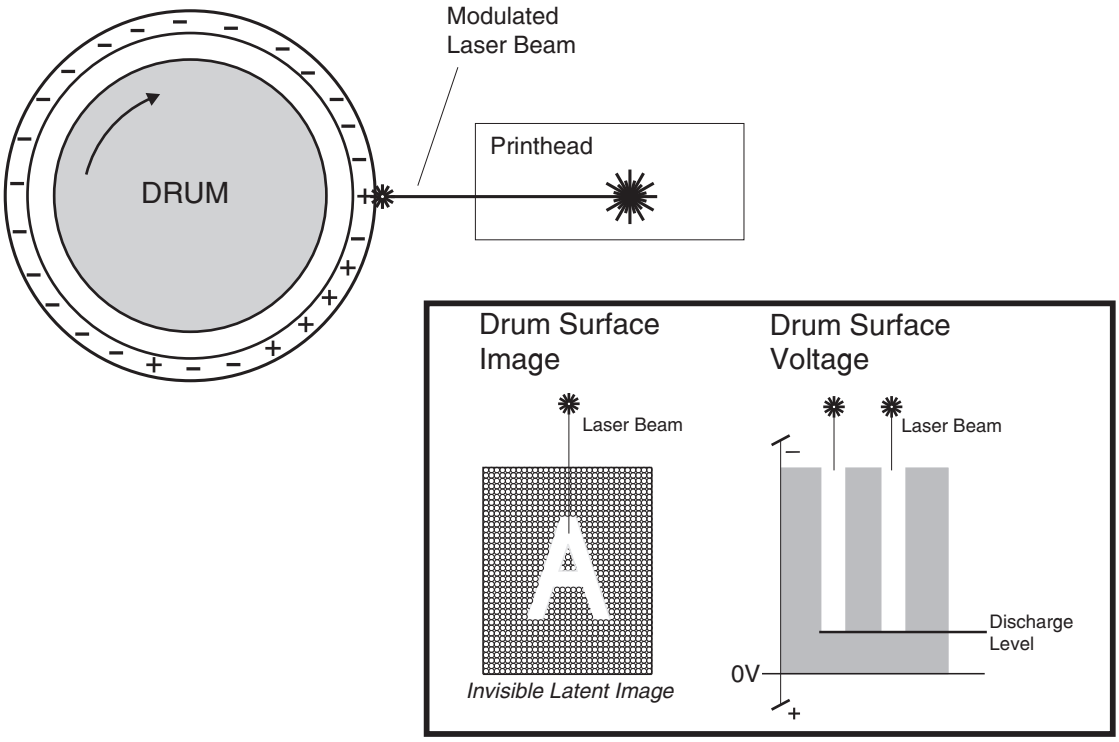

Development

The toner contained within the PC cartridge has an electrical property that causes it to adhere to the development roll. The metering blade spreads the toner into a very thin layer on the development roll. Friction between the development roll and the CM blade development roll generates a small electrical charge that is transferred to the toner.

The surface of the developer roll is made up of a thin sheet of conductive material. The HVPS supplies the development roll with two voltages: a DC voltage and an AC voltage. The DC voltage is used to transfer toner from the development roll to the surface of the drum. The AC voltage agitates the toner on the development roll, making toner transfer easier.

The development roll maintains a negative DC electrical potential. Negative charged areas of the drum have a lower electrical potential, or higher relative negative value than the development roll. Discharged areas of the drum have a higher electrical potential, or lower relative negative value, than the development roll. A discharged point on the surface of the drum now appears less negative in relation to the negative charge on the development roll.

The toner adhering to the development roll is always in contact with the drum surface. When a less negative point on the drum (a discharged area) comes in contact with the more negative charged toner on the magnet roll, toner transfers from the magnet roll to that point on the drum. There is now a visible toner image on the drum surface. The image is called a developed image.

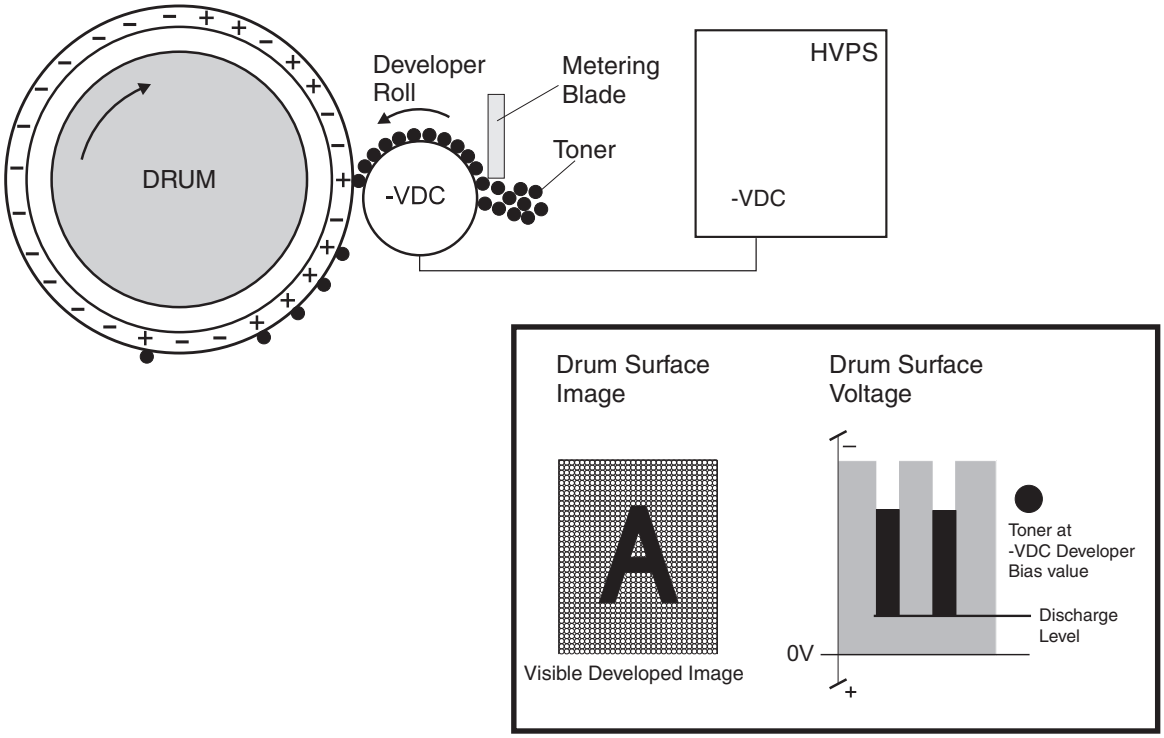

Transfer

As the paper travels between the transfer roll and the photoconductor (drum), the transfer roll applies a charge to the back of the printing paper. This positive charge transfers the negative charged toner image from the photoconductor (drum) to the top surface of the paper. The toner image is now on the paper and the paper is now stuck to the photoconductor (drum) due to the relative electrical differences between the negative electrical charge of the inner conductive layer of the drum and the positive electrical charge of the paper.

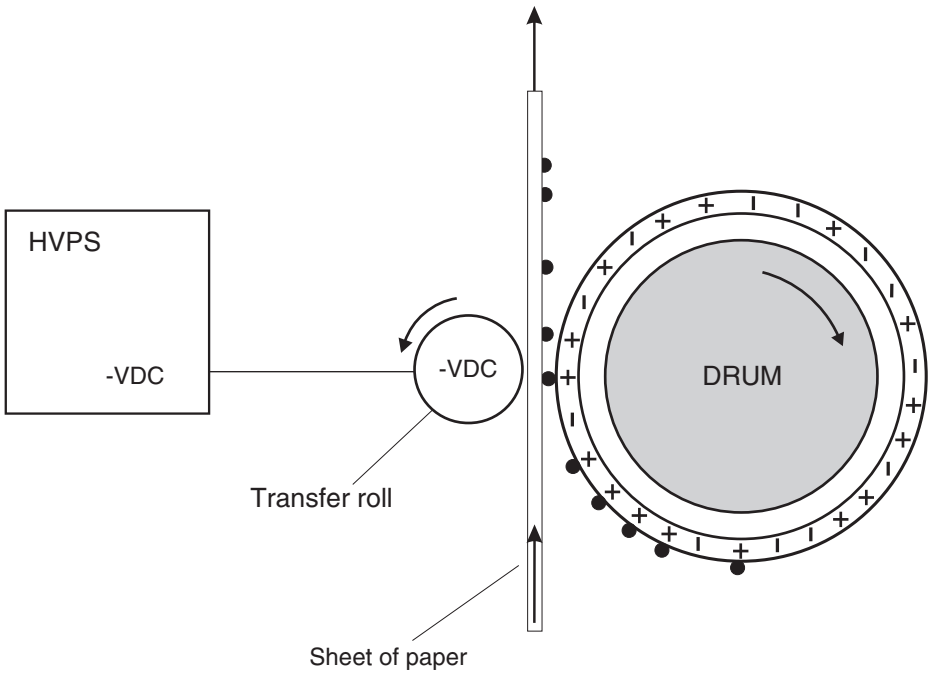

Cleaning

The cleaning blade removes any toner that remains on the drum after the transfer process. The toner that the cleaning blade removes is collected inside the sealed PC cartridge.

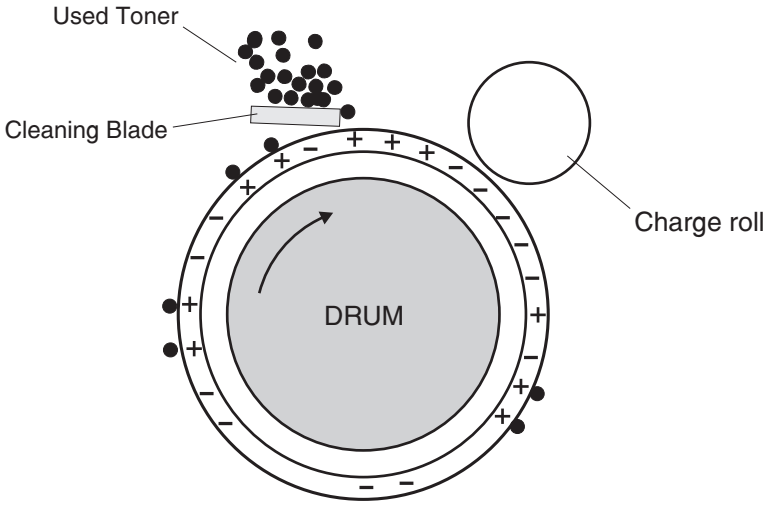

Auto density sensing

The cleaning blade removes any toner that remains on the drum after the transfer process. The toner that the cleaning blade removes is collected inside the sealed PC cartridge.

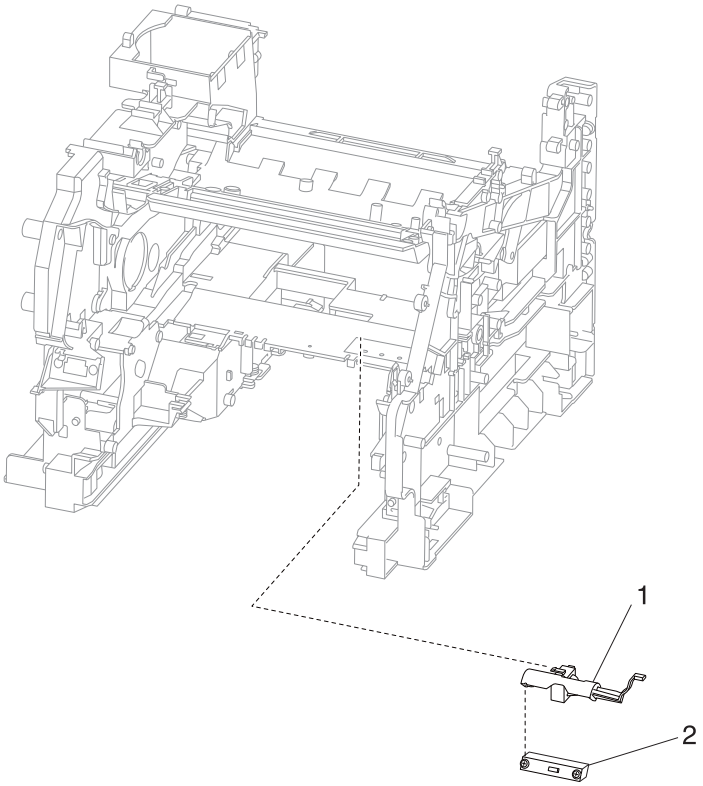

#	Part
1	Sensor shield assembly
2	Sensor (toner density)

The image density sensor assembly uses a reflection type sensor that detects a pre-placed toner patch and image on the photoconductor (drum) and outputs pulses when the central line of the patch image aligns with the central line of the detector. The sensor outputs pulses at the timing the patch image passes the sensor. Therefore, observing changes of intervals at which pulses are output leads to toner density detection.

Document scanning at ADF

The document scanning section of this machine consists of a scanner that reads a single-sheet document placed on the platen glass and a document feeder that can transport a multiple-sheet document for one or twosided scanning.

Document scanning at platen

Shown below is the operational overview of document scanning at the platen.

The scanner LED assembly travels to read the document.

The exposure lamp is installed on the scanner LED assembly. As the scanner LED assembly travels, the document on the platen glass is scanned and exposed with the exposure lamp.

The image data is read with the scanner LED image sensor assembly.

This ADF employs a constant velocity transport system that scans images by feeding the document at a constant speed over the specified position (scan position) where the carriage of the scanner unit assembly is fixed.

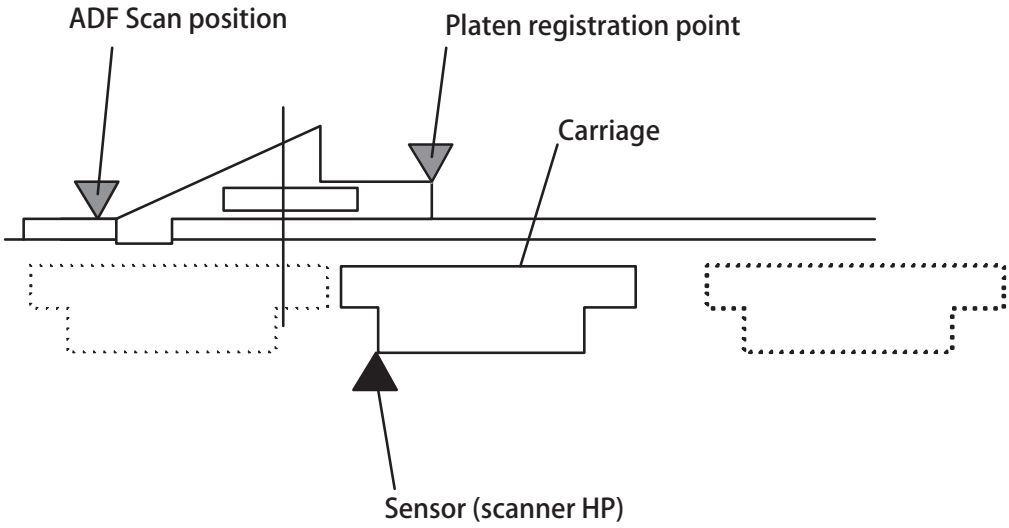

High capacity input tray (HCIT) tray assembly

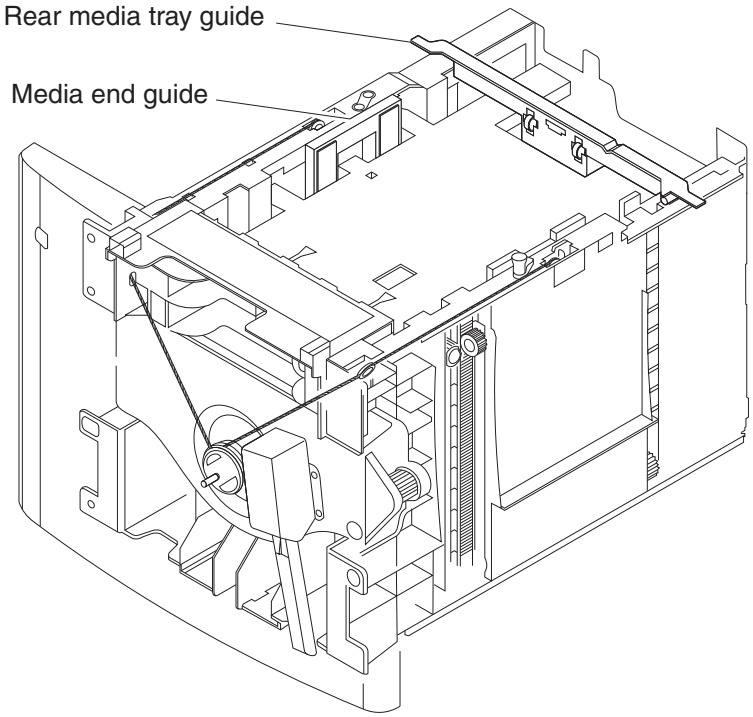

#	Part
1	Rear media tray guide
2	Media end guide

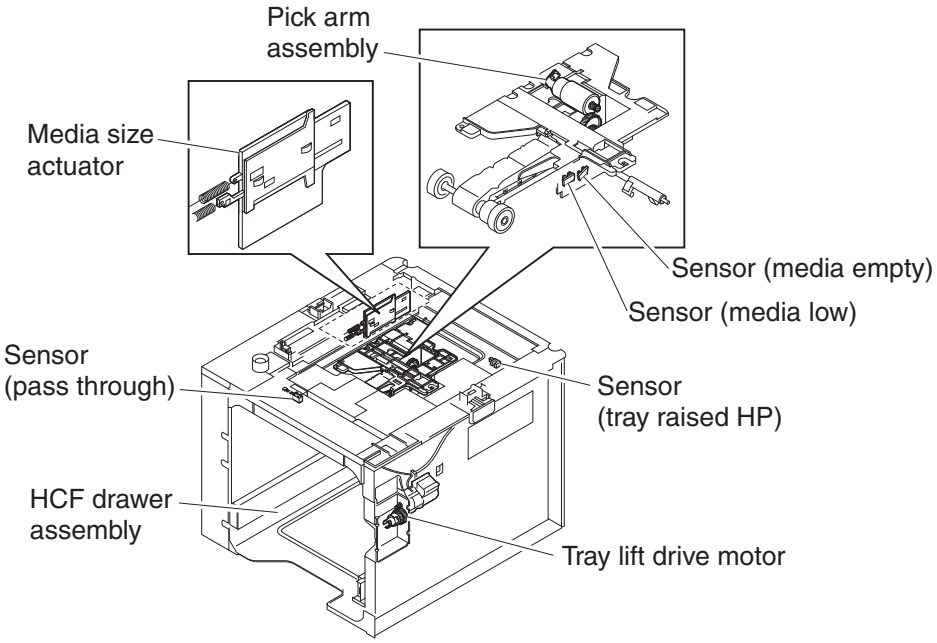

#	Part
1	Pick arm assembly
2	Sensor (media empty)
3	Sensor (media low)
4	Sensor (tray raised HP)
5	Tray lift drive motor
6	HCF drawer assembly
7	Sensor (pass through)
8	Media size actuator

250-sheet/550-sheet tray assembly

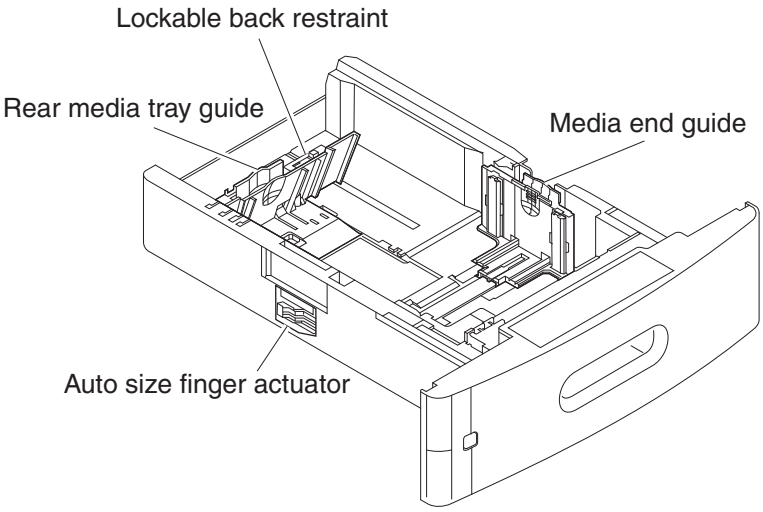

#	Part
1	Lockable back restraint
2	Media end guide
3	Auto size finger actuator
4	Rear media tray guide

Media size sensing

The media size set for the media tray assembly is set by positioning the right media guide, unlocking the slider lock, and sliding the rear paper guide. The rear paper guide triggers the movement of the auto size sensing finger, which then sets the switches of the controller card board. The combination of on/off position of the three switches provides information of the media sizes to the engine.

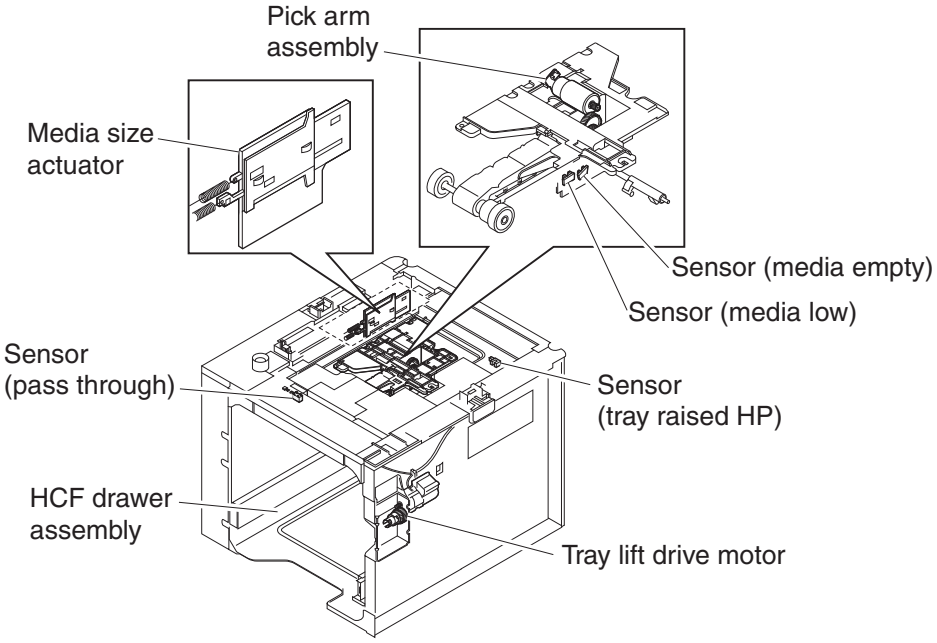

Media size	Switch 1	Switch 2	Switch 3
Unknown	OFF	OFF	OFF
A4	OFF	OFF	ON
Legal	OFF	ON	OFF
B5	OFF	ON	ON
A5	ON	OFF	OFF
Executive	ON	OFF	ON
Letter	ON	ON	OFF
Custom	ON	ON	ON

Note: Media size sensing through on/off switch combination

Media level sensing

The media level for the media tray assembly is triggered by the actuator flag positioned in the two photointerrupter sensors in the pick arm bracket assembly. The actuator flag blocks and unblocks the two sensors in different sequence; it determines whether the paper tray is empty, low, or full.

250-sheet tray	Sensor A	Sensor B
Tray full	unblocked	unblocked
Tray low	blocked	unblocked
Tray empty	blocked	blocked

550-sheet tray	Sensor A	Sensor B
Tray full	unblocked	unblocked
Tray low	blocked	blocked
Tray empty	blocked	unblocked

Note: Media level sensing through sensor blocking sequence

Pick motor

The pick motor is activated to provide downward force at the pick roll through the pick arm gear train.

Sensor A & B

The photointerrupter sensors send signals to the engine; the media level status is empty, low, or full. An actuator flag triggers the sensor by blocking it.

Sensor (pass-thru)

A photointerrupter sensor with a built-in flag that sends a signal to the engine where the media from the input tray passes. This will trigger the pick arm to pick the next media.

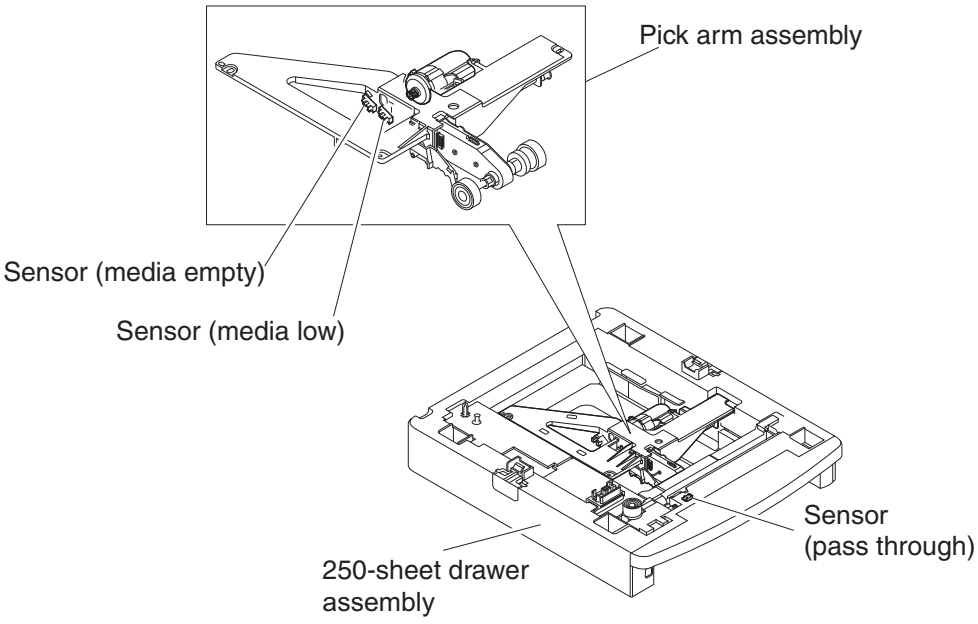

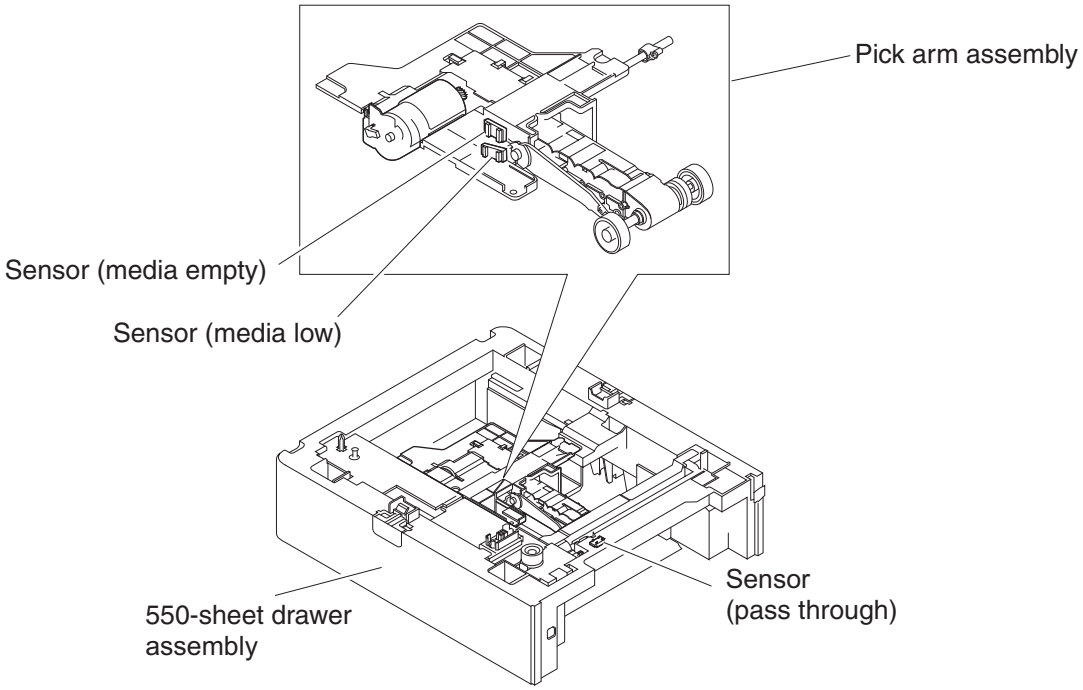

Paper path, rolls, and sensors

Media transport path

The following is a cross section of the printer and the tandem tray module, showing the main components directly associated with the media path and transport.

Models X651, X652, X654, and X656 paper path, rolls, and sensors

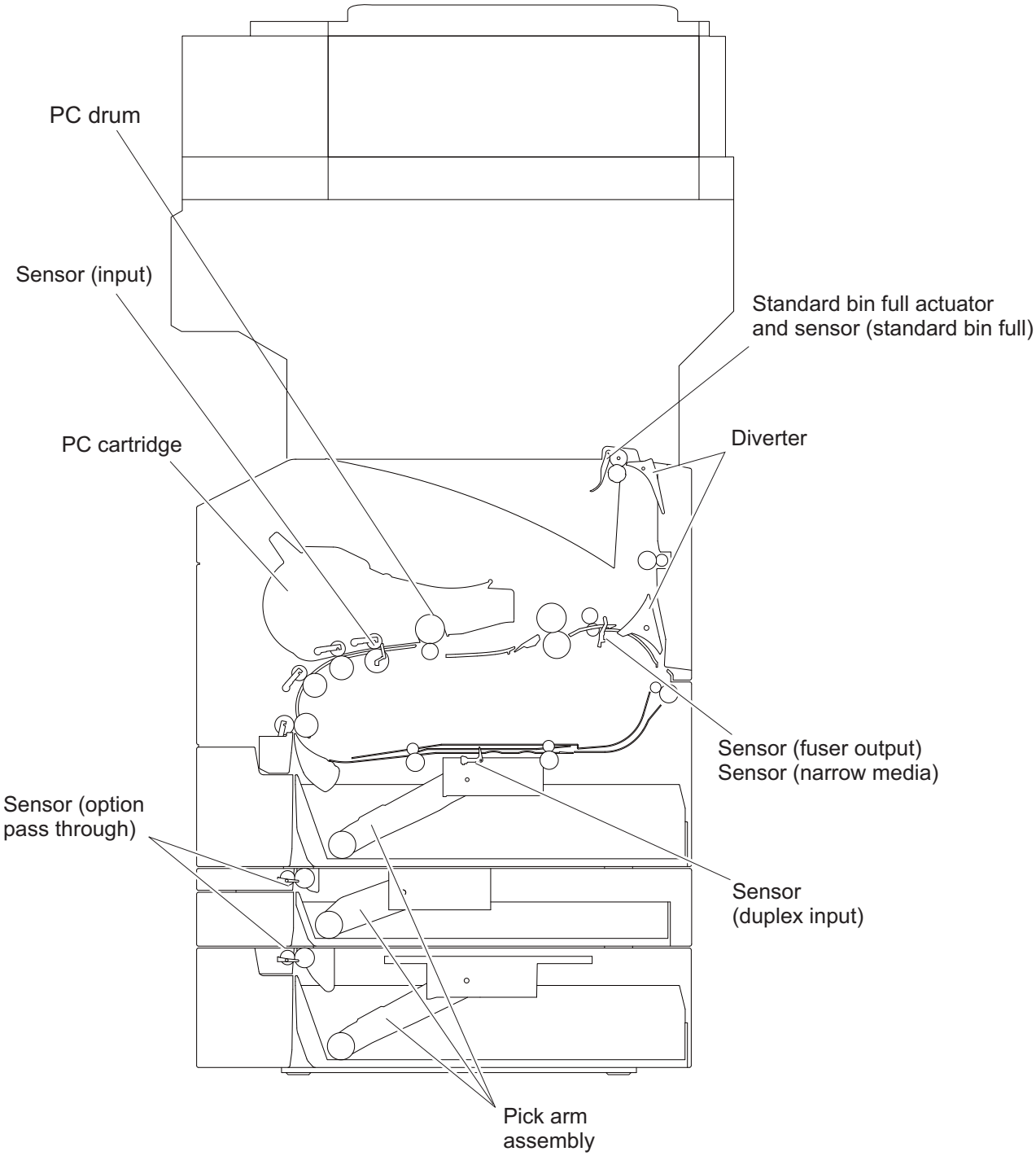

#	Part
1	Standard bin full actuator and sensor
2	Diverter
3	Sensor (fuser output, narrow media)
4	Sensor (duplex input)

#	Part
5	Pick arm assembly
6	Sensor (option pass through)
7	PC cartridge
8	Sensor (input)
9	PC drum

Model X658 paper path, rolls, and sensors

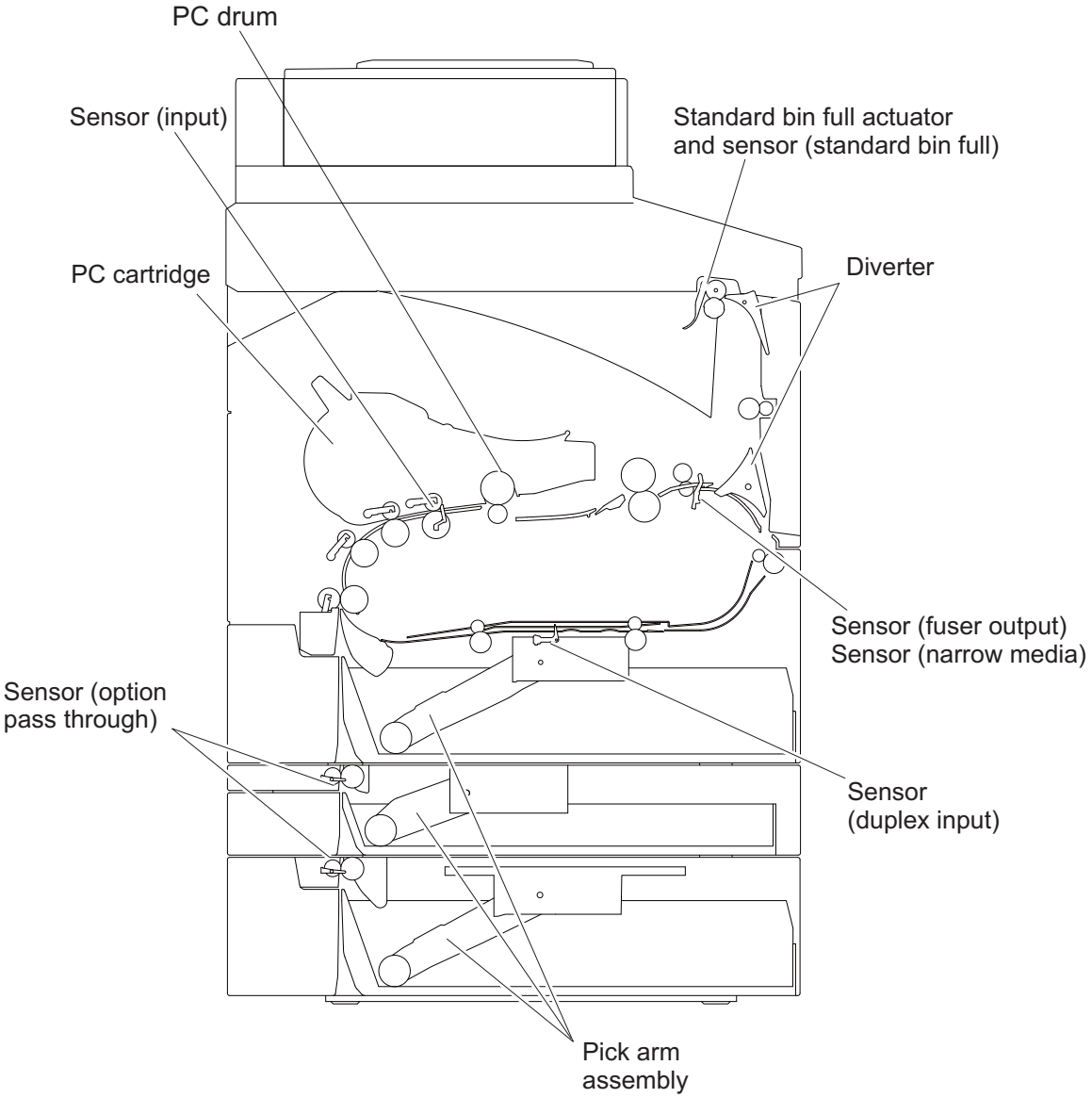

#	Part
1	Standard bin full actuator and sensor
2	Diverter
3	Sensor (fuser output, narrow media)

#	Part
4	Sensor (duplex input)
5	Pick arm assembly
6	Sensor (option pass through)
7	PC cartridge
8	Sensor (input)
9	PC drum

Functions of main components

When the 250 or 550 sheet input trays are installed under the printer, additional trays are available.

Media tray assembly

It is necessary to adjust the media tray rear guide and media tray side guide of the media tray assembly to match the media size.

Rear media guide

The rear media tray guide assembly can be adjusted to different media sizes by moving it to the front or rear. The rear guide should come into contact with the media and hold it in position.

Side guide

The media tray assembly is designed so it can adapt to the media width in the media feed direction by moving the side guide to the left or right.

Wear strips

The wear strips are designed to provide a fixed resistance to ensure that a single piece of paper is properly fed out of the media tray. There are several types of wear strips available for custom or hard to feed media.

Media tray assembly

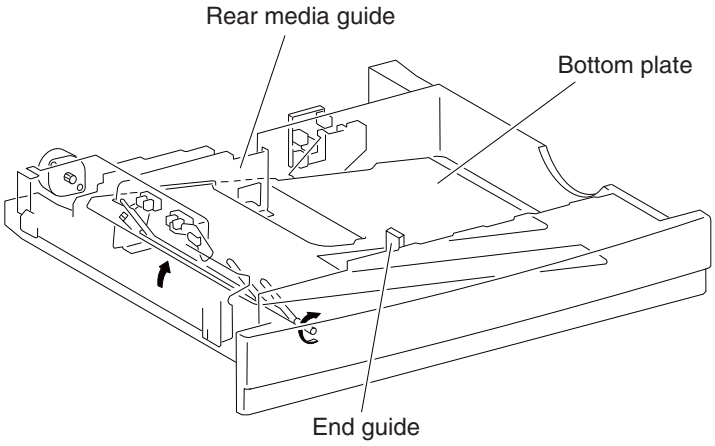

#	Part
1	Rear media tray guide
2	Bottom plate
3	End guide

Detection of media size

The media size set for the media tray assembly is transmitted to the switch (media size) by moving these guides. The media size is detected by the on/off information of these switches.

Pick arm assembly

Since all media trays are functionally equivalent in terms of the switch (media size), sensor (media empty), sensor (media low), only the components of one tray are described here.

The pick arm assembly is a mechanical unit supplying media from the media tray assembly to the printer. The driving force, from the pick arm drive motor on the pick arm assembly, is transmitted to the two pick rolls to feed media.

When the pick rolls pick up media, the remaining media decreases, and the media out actuator will lower and interact with the sensor (media low) and sensor (media empty) to determine the amount of media remaining. The pick arm assembly (autocompensator) is a paper pick device that generates its own normal force. This force generation is inherent in the fundamental design of the pick arm. If light media is used, it picks very gently. If a heavy media is used, it picks very aggressively. No customer adjustments are necessary, therefore no special trays are needed for card stock or labels. The gearing in the arm is designed so the input torque from the motor produces a movement about the pivot of the arm. This movement produces a downward force at the pick rolls. The friction between the pick roll and the paper produces a frictional locking condition. If the paper is physically held and not allowed to feed, then the motor stalls. Slippage between the roll and the paper is theoretically impossible. When the motor is energized, the pick rolls are driven down into the stack, increasing the normal force and drive force until the bending strength of the paper is overcome and the paper bends and moves up the wear strip.

Switch (media size)

This switch (media size) sets the size of media supplied from each media tray assembly. A signal indicating the media size is transmitted as a voltage to the printer system card assembly.

Sensor (media empty)

If media runs out in a media tray assembly, the actuator lowers and the actuator flag, unlocks the sensing area of the sensor (media empty). The sensor light is transmitted. When the sensing area is blocked (media is present), the signal is off.

Sensor (media low)

This sensor detects by the actuator position whether media in the media tray assembly is low. When the flag of the actuator blocks, then unblocks the sensing area of the sensor (media low), the media level is determined to be low.

Tray 2 media tray assembly

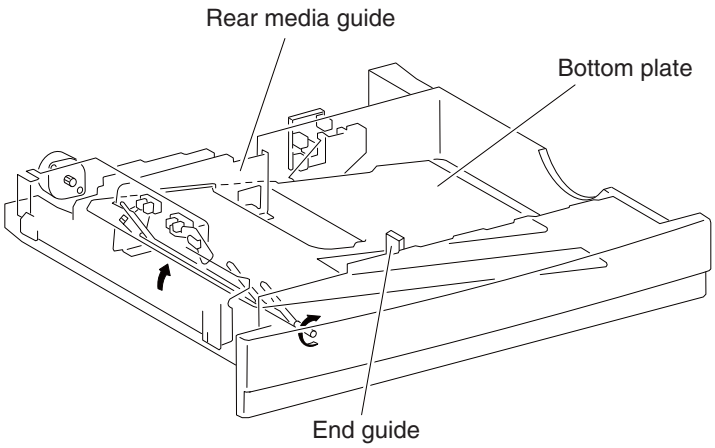

Media Size	Analog switch S/W1	Analog switch S/W3
No Tray	Off	Off
B5L/7.25” x 10.5”L	Off	On
8.5” x 11”L	On	Off
A4L	On	On

Duplex

Functions of main components

When the duplex is installed, duplex (double-sided) printing is available with the printer.

The following outlines the functions of the main components of the duplex.

Sensor (duplex input)

The sensor (duplex wait) detects whether media is remaining in the duplex.

Duplex drive motor assembly

The duplex drive motor assembly transmits driving force to the two duplex media transport roll assemblies and the duplex media center transport roll assembly middle that feeds media.

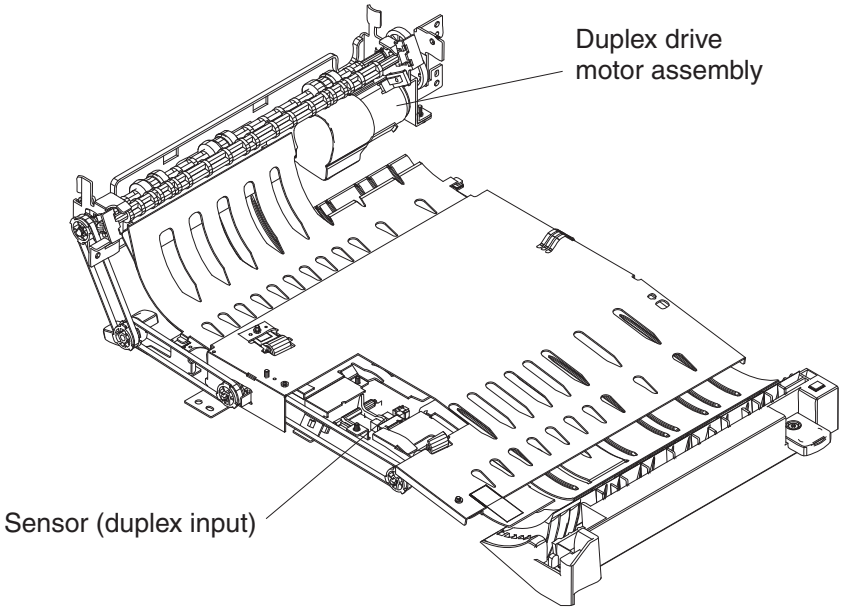

#	Part
1	Duplex drive motor assembly
2	Sensor (duplex input)

Appendix D: Acronyms

Acronyms

BLDC	Brushless DC Motor
CRU	Customer Replaceable Unit
CSU	Customer Setup
DIMM	Dual Inline Memory Module
DRAM	Dynamic Random Access Memory
DVM	Digital multimeter
EDO	Enhanced Data Out
EEPROM	Electrically Erasable Programmable Read-Only Memory
EP	Electrophotographic Process
EPROM	Erasable Programmable Read-Only Memory
ESD	Electrostatic Discharge
FRU	Field Replaceable Unit
GB	Gigabyte
HCIT	High-Capacity Input Tray
HVPS	High Voltage Power Supply
ITC	Internal Tray Card
LCD	Liquid Crystal Display
LED	Light-Emitting Diode
LVPS	Low Voltage Power Supply
MPF	Multipurpose Feeder
MROM	Masked Read Only Memory
MS	Microswitch
NVRAM	Nonvolatile Random Access Memory
OEM	Original Equipment Manufacturer
OPT	Optical Sensor
PC	Photoconductor
pel	Picture element
POR	Power-On Reset
POST	Power-On Self Test
PP	Parts Packet
PWM	Pulse Width Modulation
RFID	Radio Frequency Identification

RIP	Raster Imaging Processor
ROM	Read Only Memory
SDRAM	Synchronous Dual Random Access Memory
SIMM	Single Inline Memory Module
SRAM	Static Random Access Memory
UAT	Universally Adjustable Tray
UPR	Used Parts Return
V ac	Volts alternating current
V dc	Volts direct current
VOM	Volt Ohmmeter

Index

Numerics

A

B

C

D

E

F

H

I

J

L

M

N

O

P

Q

R

S

T

U

W

X

Part number index

Part name index

Print defects guide

Match a set of repeating defects on a print job to the marks on one of the vertical lines. The line that best matches the defects on the print job indicates which particular part may be causing the defect.

For example, the distance between these two marks represents a repeating defect that occurs every 28.3 mm (1.11 in.), which means the charge rollers may need to be replaced.

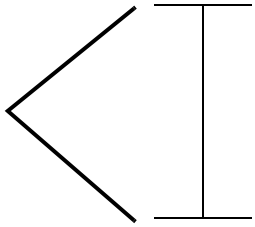

Note: If the defect appears on the printed side of a single-sided print job, replace the **toner cartridge** before replacing the **fuser.**

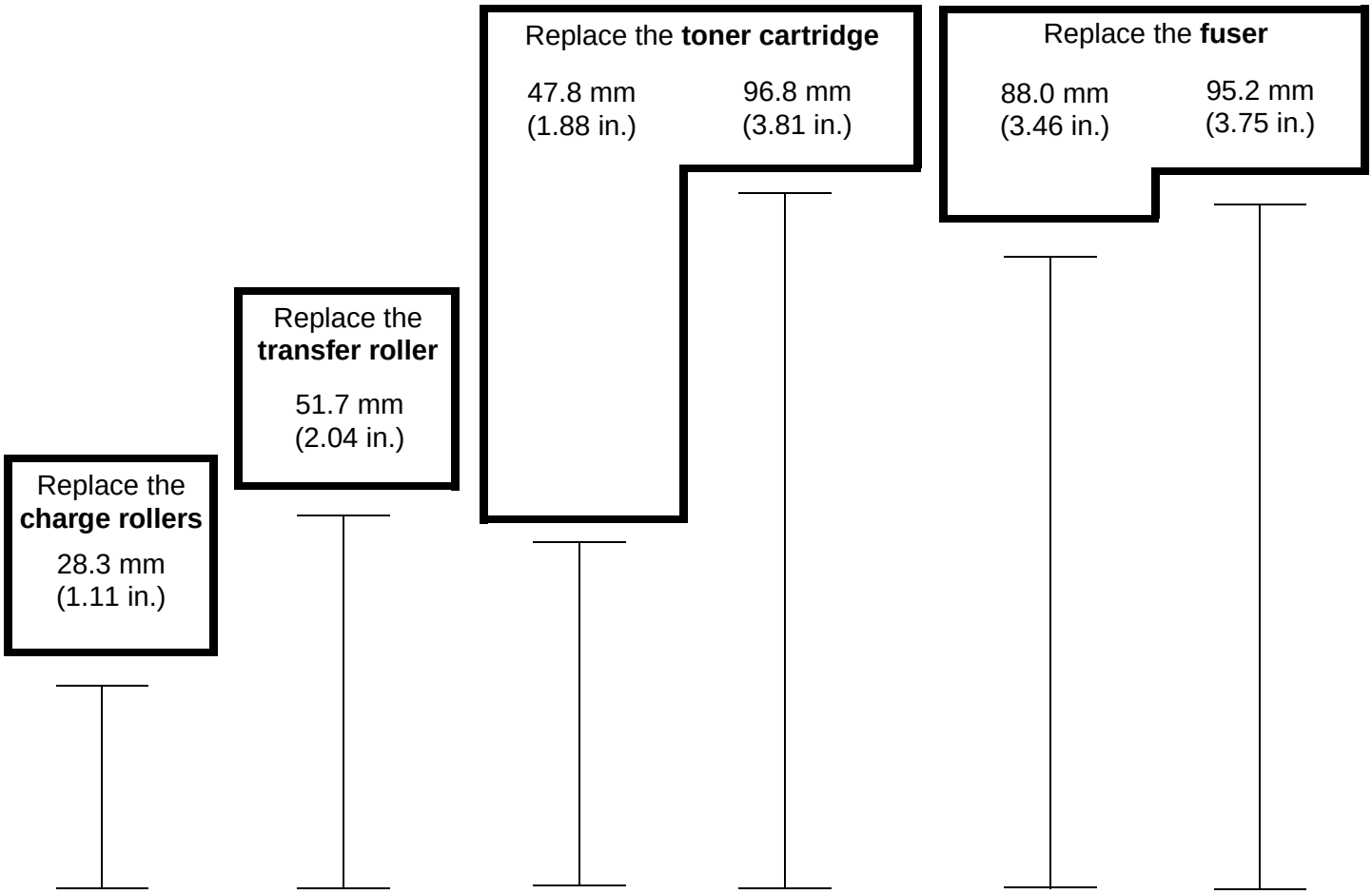

7462 MFP

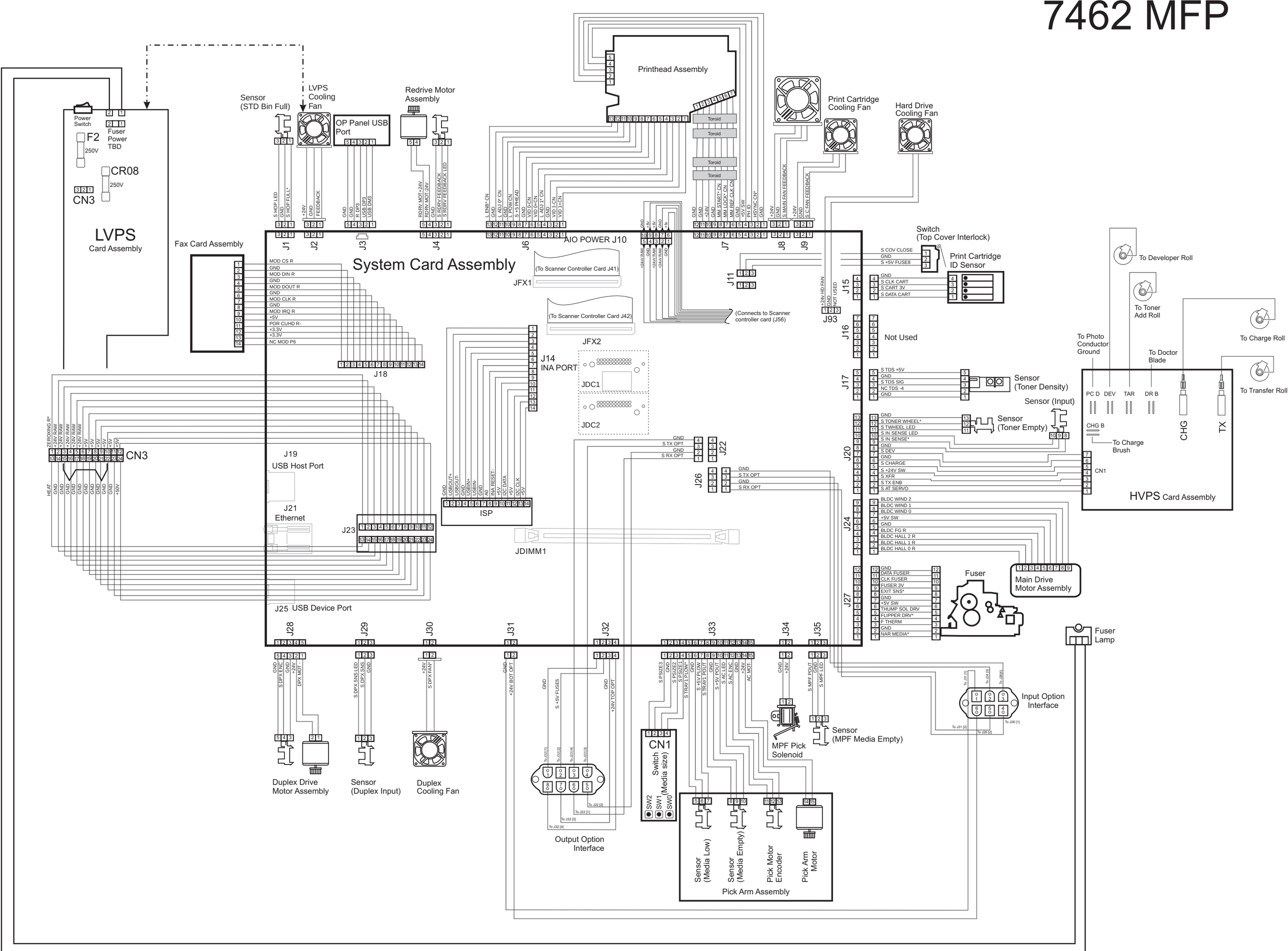
Power Switch
F2
250V
Fuser Power TBD
CR08
250V
CN3
LVPS
Card Assembly
Sensor (STD Bin Full)
LVPS Cooling Fan
OP Panel USB Port
Redrive Motor Assembly
Printhead Assembly
Toroid
Print Cartridge Cooling Fan
Hard Drive Cooling Fan
Fax Card Assembly
System Card Assembly
AIO POWER J10
(To Scanner Controller Card J41)
JFX1
(To Scanner Controller Card J42)
JFX2
(Connects to Scanner controller card (J56)
J14
INA PORT
JDC1
JDC2
J18
J19
USB Host Port
J21
Ethernet
J23
J25 USB Device Port
ISP
JDIMM1
J22
J26
J20
J24
J27
J93
J11
J15
J16
J17
J1
J2
J3
J4
J6
J7
J8
J9
J28
J29
J30
J31
J32
J33
J34
J35
Switch (Top Cover Interlock)
Print Cartridge ID Sensor
Not Used
Sensor (Toner Density)
Sensor (Input)
Sensor (Toner Empty)
To Developer Roll
To Toner Add Roll
To Photo Conductor Ground
To Doctor Blade
To Charge Roll
To Transfer Roll
To Charge Brush
PC D
DEV
TAR
DR B
CHG B
CHG
TX
CN1
HVPS Card Assembly
Main Drive Motor Assembly
Fuser
Fuser Lamp
Input Option Interface
Duplex Drive Motor Assembly
Sensor (Duplex Input)
Duplex Cooling Fan
Output Option Interface
CN1
Switch (Media size)
SW2
SW1
SW0
MPF Pick Solenoid
Sensor (MPF Media Empty)
Sensor (Media Low)
Sensor (Media Empty)
Pick Motor Encoder
Pick Arm Motor
Pick Arm Assembly

7462 MFP SCANNER/ADF